City of Thornton

Infrastructure Maintenance Center
12450 Washington Street
Thornton, CO 80241-2405
www.thorntonwaterproject.com

Infrastructure Department
Thornton Water Project
720-977-6700
Fax: 720-977-6202

January 28, 2022

Ms. Jenni Grafton, Director
Adams County Community & Economic Development Department
4430 S. Adams County Pkwy
1st Floor, Suite W2000
Brighton, CO 80601-8204

RE: Areas and Activities of State Interest approval for the Thornton Water Project in unincorporated Adams County

Dear Ms. Grafton:

The city of Thornton (Thornton) is submitting under separate cover a draft proposed *Intergovernmental Agreement Between the City of Thornton and Adams County for the Thornton Water Project* and the attached *Thornton Water Project Areas and Activity of State Interest Intergovernmental Agreement Submittal Report* (Submittal Report). This Submittal Report is submitted in lieu of an Areas and Activity of State Interest (AASI) permit application. Pursuant to Section 6-07-01-02 of the Adams County Development Standards and Regulations (Regulations), the Adams County's Community and Economic Development Director has determined that the Thornton Water Project (TWP) is subject to Adams County's AASI regulations (Regulations Chapter 6 – Regulations Governing Areas and Activities of State Interest); Adams County has elected to negotiate an Intergovernmental Agreement (IGA) with Thornton in lieu of an AASI permit application and review pursuant to Section 6-16 of the Regulations.

The TWP is a domestic water delivery system that will convey water from the Water Supply and Storage Company (WSSC) system that was purchased by Thornton in the mid-1980s to enhance Thornton's water supply reliability and drought resiliency, help address source water quality issues, and meet municipal and industrial demands of Thornton's water customers through 2065.

Thornton is proposing to construct, operate, and maintain a portion of the TWP, which includes approximately 3.6 miles of buried 42-inch water pipeline and associated appurtenances located in unincorporated Adams County, Colorado. The section of the TWP water pipeline located in both unincorporated and incorporated areas of Adams County is designated Segment A and the portion in unincorporated Adams County is designated Project in this Submittal Report. Project appurtenances include buried fiber optic conduit/cable, pipeline cathodic protection system, and various buried water pipeline structures and valve vaults including access manways, blow-off assemblies, air release valve vaults, and isolation valve vaults.

This Submittal Report addresses areas in unincorporated Adams County, which include private or public lands within the boundaries of Adams County and outside the boundaries of any municipality (city or town). This Submittal Report is aligned with guidance received from Adams County during the conceptual review meeting on March 12, 2021, and is prepared based on the preliminary review comments for Segment A (PRE2021-00013) provided by the Adams County Development Review Team in a letter to Thornton dated March 5, 2021 (Appendix B), an email received from Adams County on March 17, 2021, and a memorandum received from Adams County dated April 22, 2021. Thornton is required to submit information as specified in the Regulations unless waived by the Community and Economic Development Director per Section 6-07-02 of the Regulations. Adams County has waived or granted variances to certain submittal requirements as provided in the documents indicated above.

This Submittal Report is generally organized to address items in the *AASI Application Checklist*, the *AASI Application Submittal Requirements* (Section 6-07-02 of the Regulations) and the *AASI Approval Criteria* (Section 6-17 of the Regulations).

This Submittal Report includes the following:

AASI Application Checklist

- Development Application Form
- Application Fees
- Written Explanation of the Project
- Site Plan Showing Proposed Development
- Proof of Ownership
- Proof of Water and Sewer Services
- Proof of Utilities
- Neighborhood Meeting Summary
- Legal Description
- Certificate of Taxes Paid
- Certificate of Notice to Mineral Estate Owners/Lessees
- Certificate of Surface Development
- Information Describing the Applicant
- Information Describing the Project
- Property Rights, Permits and Other Approvals
- Financial Feasibility of the Project
- Land Use
- Local Government Services
- Financial Burden on County Residents
- Local Economy
- Recreational Opportunity
- Environmental Impact Analysis
- Drainage Report
- Traffic Impact Study
- Erosion and Sediment Control Plans

- Construction/Engineering Design Plans

Regulations

AASI Application Submittal Requirements-Section 6-07-02

- Information Describing the Applicant (Section 6-07-02-02)
- Information Describing the Project (6-07-02-03)
- Property Rights, Permits and Other Approvals (Section 6-07-02-04)
- Financial Feasibility of the Project (Section 6-07-02-05)
- Land Use (Section 6-07-02-06)
- Local Government Services (Section 6-07-02-07)
- Financial Burden on County Residents (Section 6-07-02-08)
- Local Economy (Section 6-07-02-09)
- Recreational Opportunities (Section 6-07-02-10)
- Environmental Impact Analysis (6-07-02-11)
- Referrals to Outside Agencies, Response to Referral Comments and Neighborhood/Scoping Meeting (6-07-02-12)
- Additional Submittal Requirements for Major Water and Sewer Projects (6-08-01)

AASI Approval Criteria-Section (6-17)

Neighborhood Meeting (2-01-02)

References

Appendices

- Appendix A Adams County Waivers and Responses to Thornton Variance Requests
- Appendix B Conceptual Review Meeting Comments (Preliminary)
- Appendix C Development Application Form and AASI Checklist
- Appendix D Figures of Segment A Alignments, Parcel IDs, Alignment Report
- Appendix E Current Project Plans
- Appendix F Current Project Specifications
- Appendix G Neighborhood Meeting Materials
- Appendix H Thornton City Council Funding Approval for Project
- Appendix I Natural and Cultural Resources Assessment
- Appendix J Site Geologic Conditions and Natural Hazards
- Appendix K Roadway Access Points
- Appendix L ERO Phase II Assessment
- Appendix M Outside Referral Agencies

Thornton respectfully submits this Submittal Report in lieu of an AASI permit application and looks forward to working with Adams County staff on the negotiation of the IGA.

Please do not hesitate to contact me if I can assist with any questions or information regarding the Project. I can be reached at (720) 977-6233.

Sincerely,

Jason Pierce, P.E.
Thornton Water Project Director

Community & Economic
Development Department
www.adcogov.org

ADAMS COUNTY
COLORADO

4430 South Adams County Parkway
1st Floor, Suite W2000
Brighton, CO 80601-8204
PHONE 720.523.6800
FAX 720.523.6998

Application Type:

☐ Conceptual Review	☐ Preliminary PUD	☐ Temporary Use
☐ Subdivision, Preliminary	☐ Final PUD	☐ Variance
☐ Subdivision, Final	☐ Rezone	☐ Conditional Use
☐ Plat Correction/ Vacation	☐ Special Use	☒ Other: Thornton Segment A Waterline

PROJECT NAME: Segment A Waterline, Thornton Water Project

APPLICANT

Name(s): City of Thornton Phone #: 720-977-6220

Address: 12450 Washington Street

City, State, Zip: Thornton, CO 80241

2nd Phone #: 720-977-6700 Email: Brett.Henry@ThorntonCO.gov

OWNER

Name(s): City of Thornton Phone #: 720-977-6220

Address: 12450 Washington Street

City, State, Zip: Thornton, CO 80241

2nd Phone #: 720-977-6700 Email: Brett.Henry@ThorntonCO.gov

TECHNICAL REPRESENTATIVE (Consultant, Engineer, Surveyor, Architect, etc.)

Name: Bill.Wemmert, AECOM Phone #: 303-478-7343

Address: 7595 Technology Way, Suite 200

City, State, Zip: Denver, CO 80237

2nd Phone #: Email: bill.wemmert@aecom.com

DESCRIPTION OF SITE

Address:	Pipe alignment generally from 168th Ave and Quebec to 87th Ave and Colorado Blvd
City, State, Zip:	Thornton, CO and Adams County, CO
Area (acres or square feet):	n/a
Tax Assessor Parcel Number	varies
Existing Zoning:	varies
Existing Land Use:	varies
Proposed Land Use:	No Change

Have you attended a Conceptual Review? YES [X] NO [ ]

If Yes, please list PRE#: PRE2021-00013

I hereby certify that I am making this application as owner of the above described property or acting under the authority of the owner (attached authorization, if not owner). I am familiar with all pertinent requirements, procedures, and fees of the County. I understand that the Application Review Fee is non-refundable. All statements made on this form and additional application materials are true to the best of my knowledge and belief.

Name: Brett E. Henry Date: 1/28/2022

Owner's Printed Name

Name: DocuSigned by: Brett Henry B79224F6FC56419...

Brett E. Henry, Executive Director-Infrastructure

Owner's Signature

Community & Economic
Development Department
www.adcogov.org

ADAMS COUNTY
COLORADO

4430 South Adams County Parkway
1st Floor, Suite W2000
Brighton, CO 80601-8204
PHONE 720.523.6800
FAX 720.523.6998

AREAS AND ACTIVITY OF STATE INTEREST (1041)

Application submittals must include all documents on this checklist as well as this page. Please use the reference guide (pg. 3) included in this packet for more information on each submittal item.

All applications shall be submitted electronically to epermitcenter@adcogov.org. If the submittal is too large to email as an attachment, the application may be sent as an unlocked OneDrive link. Alternatively, the application may be delivered on a flash drive to the One-Stop Customer Service Center. All documents should be combined in a single PDF. Once a complete application has been received, fees will be invoiced and payable online at https://permits.adcogov.org/CitizenAccess/.

- ☑ 1. Development Application Form (pg. 5)
- ☑ 2. Application Fees (see table pg. 2)
- ☑ 3. Written Explanation of the Project
- ☑ 4. Site Plan Showing Proposed Development
- ☑ 5. Proof of Ownership (title policy dated within 30 days of submittal)
- ☐ 6. Proof of Water and Sewer Services
- ☐ 7. Proof of Utilities (e.g electric, gas)
- ☑ 8. Neighborhood Meeting Summary
- ☐ 9. Legal Description
- ☐ 10. Certificate of Taxes Paid
- ☐ 11. Certificate of Notice to Mineral Estate Owners/and Lessees(pg. 7)
- ☐ 12. Certificate of Surface Development (pg. 8-10)

*Refer to **Section 6-07-02** of the Development Standards and Regulation for items below:*

- ☑ 13. Information Describing the Applicant
- ☑ 14. Information Describing the Project
- ☑ 15. Property Rights, Permits and Other Approvals
- ☑ 16. Financial Feasibility of the Project
- ☑ 17. Land Use
- ☑ 18. Local Government Services
- ☑ 19. Financial Burden on County Residents

continued on next page...

Community & Economic
Development Department
www.adcogov.org

ADAMS COUNTY
COLORADO

4430 South Adams County Parkway
1st Floor, Suite W2000
Brighton, CO 80601-8204
PHONE 720.523.6800
FAX 720.523.6998

☑ 20. Local Economy

☑ 21. Recreational Opportunity

☑ 22. Environmental Impact Analysis

Supplemental Items (if applicable)

☐ 1. Drainage Report

☐ 2. Traffic Impact Study

☑ 3. Erosion and Sediment Control Plans

☑ 4. Construction / Engineering Design Plans

Application Fees	Amount	Due
AASI Permit	$5,000 and cost of mailings	With application submittal
Tri-County Health	**$150 (TCHD Level 1)** $210 (TCHD Level 2) $360 (TCHD Level 3) $750 (TCHD Level 4)	With application submittal With application submittal
Drainage Report	$500	
Traffic Impact Study	$600	With application submittal
Erosion and Sediment Control Plans	$500	With application submittal
Construction Plans	$100	With application submittal

Thornton Water Project

Areas and Activity of State Interest (1041) Intergovernmental Agreement (IGA) Submittal Report

City of Thornton

Adams County Project No: PRE2021-00013 (Thornton Water Project)
AECOM Project No: 60619101

January 28, 2022

Prepared for:

City of Thornton
12450 Washington Street
Thornton, Colorado 80241

Prepared by:

AECOM
7595 Technology Way, Suite 200
Denver, CO 80237
aecom.com

Table of Contents

Appendices

Tables

Abbreviations/Acronyms

AASI	Areas and Activity of State Interest
AOC	Areas of Concern
APEN	Air Pollutant Emissions Notice
BLM	Bureau of Land Management
BMP	Best Management Practice(s)
CCR	Code of Colorado Regulations
CDPHE	Colorado Department of Public Health and Environment
CFR	Code of Federal Regulations
CGS	Colorado Geological Survey
CPW	Colorado Parks and Wildlife
C.R.S.	Colorado Revised Statutes
CWA	Clean Water Act
DART	Days Restricted Time
EMR	Experience Modification Rating
ERN	ERN Limited Partnership
ERO	ERO Resources Corporation
ERR	Environmental Records Review
GIS	Geographic Information System
IGA	Intergovernmental Agreement
Jacobs	Jacobs Engineering, Inc.
MS4	Municipal Separate Storm Sewer System
MUTCD	Manual on Uniform Traffic Control Devices
OAHP	Office of Archaeology and Historic Preservation
OSHA	Occupational Safety and Health Administration
PBDB	Paleobiology Database
PFYC	Potential Fossil Yield Classification
Project	Thornton Water Project in Unincorporated Adams County
Regulations	Adams County Development Standards and Regulations
SHPO	State Historic Preservation Office
SPCC	Spill Protection Countermeasure Control
T&E	Threatened and Endangered
Thornton	City of Thornton
TRIR	Total Recordable Incident Rates
TWP	Thornton Water Project
UCM	University of Colorado Museum
USACE	United States Army Corps of Engineers
U.S.C.	United States Code
USDA	United States Department of Agriculture
USFWS	United States Fish and Wildlife Service
WSSC	Water Supply and Storage Company

Introduction

The Thornton Water Project (TWP) is a domestic water delivery system that will convey water from the Water Supply and Storage Company (WSSC) system that was purchased by the City of Thornton (Thornton) in the mid-1980s to Thornton to enhance Thornton's water supply reliability and drought resiliency, help address source water quality issues, and meet municipal and industrial demands of Thornton's water customers through 2065.

Thornton's population is projected to increase from its current estimated population of 146,427 residents (Thornton, Fourth Quarter 2020 Population Estimate and Housing Inventory Report) to 242,000 residents by 2065. Thornton has proactively planned for the anticipated population increase to ensure that Thornton can provide a reliable, high quality and economical water supply to meet the needs of its residents and businesses. Thornton's existing water system, including an extensive water conservation program, has served to meet municipal and industrial water needs of Thornton's current water customers in its service area, as well as to meet existing contractual obligations. Thornton water supply projects in development will allow Thornton to provide water service up to a population of 158,000 residents. Beyond 158,000 residents, which Thornton projects to reach by 2025, additional water supplies are needed to ensure reliable water service to Thornton's water customers. Water from the WSSC system in northern Colorado purchased by Thornton in the mid-1980s from willing sellers has been decreed in Water Court for use in Thornton, but Thornton currently lacks the infrastructure to deliver that water from northern Colorado to Thornton. The TWP will provide the necessary infrastructure for delivery of this water to Thornton and provide the means by which Thornton's customers will receive the benefit of its decades-long planning for and investment in this additional water supply. The TWP is being configured to deliver an average of 14,000 acre-feet of water annually, which is sufficient to meet the municipal and industrial demands of Thornton's water customers through 2065. In addition to meeting water demands, in adding this high-quality source, the TWP provides source water diversity, enhanced water supply reliability and quality, and drought resiliency to Thornton's supply.

Thornton is proposing to construct, operate, and maintain a portion of the TWP, which includes approximately 3.6 miles of buried 42-inch water pipeline and associated appurtenances located in unincorporated Adams County, Colorado. The section of the TWP water pipeline located in unincorporated areas and incorporated areas of Adams County is designated Segment A and the portion in unincorporated Adams County is designated Project in this Submittal Report.

Pursuant to Section 6-07-01-02 of the Adams County Development Standards and Regulations (Regulations), the Adams County's Community and Economic Development Director has determined that the Project is subject to Adams County's Areas and Activity of State Interest (AASI) regulations (Regulations Chapter 6 – Regulations Governing Areas and Activities of State Interest); Adams County has elected to negotiate an Intergovernmental Agreement (IGA) with Thornton in lieu of an AASI permit application and review pursuant to Section 6-16 of the Regulations.

Thornton is required to submit information as specified in the Regulations unless waived by the Community and Economic Development Director per Section 6-07-02 of the Regulations. Adams County has waived certain submittal requirements as documented in Appendix A of this Submittal Report.

This Submittal Report was prepared based on the preliminary review comments for Segment A (PRE2021-00013) provided by the Adams County Development Review Team in a letter to Thornton dated March 5, 2021 (Appendix B). Additionally, the report is aligned with guidance received from Adams County during the conceptual review meeting held on March 12, 2021, email received from Adams County on March 17, 2021 (Appendix A), and memorandum received from Adams County dated April 22, 2021 (Appendix A).

This Submittal Report is divided into three sections following the Introduction. The first technical section is: AASI Application Checklist, and includes subject headings and associated response information to address the Adams County Areas and Activities of State Interest (1041) checklist (AASI Application Checklist) topics. The Application Checklist form is included in Appendix C. The second technical section is: AASI Application Submittal Requirements-Section 6-07-02, and includes information and responses to each of the articles contained in Section 6-07-02 of the Regulations. The third technical section is: AASI Approval Criteria, and provides in table format a listing of the approval criteria from Section 6-17 of the Regulations and an associated compliance response.

1. AASI Application Checklist

Adams County requires inclusion of the AASI Checklist to document that items are included in the application submittal. The Checklist form is included in Appendix C of this Submittal Report. The sections below present complete responses to the items in the Checklist.

1 Development Application Form

The completed Development Application Form is included in Appendix C.

2 Application Fees

Thornton has submitted the appropriate application fee along with this submittal.

3 Written Explanation of the Project

Thornton is proposing to locate and construct the Project, which is a section of the TWP in Adams County, a domestic water delivery system that will convey high-quality domestic water Thornton purchased in the mid-1980's from the WSSC system to enhance Thornton's water supply reliability and drought resiliency, help address source water quality issues, and meet municipal and industrial demands of Thornton's water customers through 2065. The Project includes approximately 3.6 miles of a buried 42-inch water pipeline capable of conveying 40 million gallons per day and associated appurtenances in unincorporated Adams County, Colorado. Project appurtenances include buried fiber optic cable, pipeline cathodic protection system, and various buried water pipeline structures and valve vaults including access manways, blow-off assemblies, air release vaults, and isolation valve vaults. The Project extends from the intersection of Quebec Street and 168th Avenue to Thornton's Wes Brown Water Treatment Plant located near the intersection of Colorado Boulevard and 86th Avenue. Figure 1 and Figure 2, located in Appendix D, illustrate the Segment A water pipeline alignment. The figures identify Thornton's jurisdiction with a hatch pattern and Adams County jurisdiction without the hatch pattern to identify those sections of Segment A comprising the Project.

The water pipeline will be buried at a minimum depth of 5 feet below grade. The depth of bury will vary based on existing utility crossings, road crossings, water crossings, other existing or proposed features, and property owner's reasonable preferences. Areas disturbed for construction of the water pipeline will be restored to pre-construction grades and revegetated to pre-construction vegetation where appropriate after construction. Typically, the Project consists of a 50-foot permanent easement for the water pipeline and an additional 40-foot temporary easement for construction.

Project construction activities are proposed to begin in early 2022 and end in late 2023, and operation is scheduled to start in late 2023.

4 Site Plan Showing Proposed Development

Segment A will extend from the intersection of Quebec Street and 168th Avenue to the Wes Brown Water Treatment Plant located near the intersection of Colorado Boulevard and 86th Avenue. The alignment is shown on Figures 1 and 2 in Appendix D. The water pipeline design documents are in progress. The in-progress Project plans and specifications are included for reference in Appendix E and Appendix F respectively. Note that the current Segment A plans include some drainage crossing locations where proposed tunnels may change to open cut installations where construction activities will be authorized by the United States Army Corps of Engineers (USACE) under Nationwide Permits. The Segment A plans will be revised as applicable.

5 Proof of Ownership

Segment A will be owned by Thornton and will be constructed within the public right-of-way and within permanent easements that Thornton has or will obtain from private property owners. Thornton has also or will obtain temporary construction easements from private property owners to facilitate construction of the water pipeline.

6 Proof of Water and Sewer Services

Not Applicable

7 Proof of Utilities

Not Applicable

8 Neighborhood Meeting Summary

A neighborhood meeting was held on August 12, 2021 at the Margaret Carpenter Recreation Center, Thornton, CO. Stakeholders located within 750 feet of the Project were invited. The mailing list was generated by Adams County and invitations were mailed by Thornton in accordance with Section 2-01-02 of the Regulations.

The meeting was an open house format. Exhibits included several that presented the project objectives and history of the TWP development. Exhibits illustrated the full extent of the TWP and details specific to the Project. Large scale maps were displayed showing aerial background, the proposed water pipeline alignment, and property lines. Thornton representatives and engineering design team representatives were available for questions. Comment sheets were available for attendees to provide feedback concerning the Project. Attendees were provided the opportunity to sign up to receive project updates and information was provided regarding where to find information at the TWP website.

The meeting was attended by 21 people. After locating their residence, business, or area of interest on the map exhibits, most of the public attendees found that the Project did not impact them directly or the impacts were limited. There was public interest regarding how traffic would be managed and associated concerns about traffic congestion. The public was advised that the Project would include traffic control plans to mitigate traffic-related impacts. The project team generally did not receive negative feedback or feedback that would result in any revisions to the planned Project configuration or design. Copies of the public meeting sign-in sheet with personal information redacted to protect privacy, exhibits, and maps displayed at the meeting are included in Appendix G.

9 Legal Description

Not Applicable

10 Certificate of Taxes Paid

Not Applicable

11 Certificate of Notice to Mineral Estate Owners/Lessees

Water pipelines or appurtenances to said water pipelines are excluded from the definition of “applications for development” as provided in Colorado Revised Statutes (C.R.S.) § 24-65.5-102(2)(a). Section 6-02-79 of the Regulations defines Water Supply System as “A system of wells, diversions, pipes, structures, and facilities, including water reservoir(s), or water storage, impoundments and their associated structures, through which a water supply is obtained, stored, and sold or distributed for domestic uses; or the system of wells, diversions, pipes, structures, and facilities, including impoundments, through which a water supply is obtained which will be used directly or by trade, substitution, augmentation or exchange, for water which will be used for human consumption or household use.. . . .” Accordingly, because the Project water pipeline and its appurtenances are excluded from the definition of “applications for development” under C.R.S. § 24-65.5-102(2)(a), the mineral estate owner notification requirement under C.R.S. § 24-65.5-103 is not applicable to this application.

12 Certificate of Surface Development

Water pipelines or appurtenances to said water pipelines are excluded from the definition of “applications for development” as provided in C.R.S. § 24-65.5-102(2)(a). Section 6-02-79 of the Regulations defines Water Supply System as “A system of wells, diversions, pipes, structures, and facilities, including water

reservoir(s), or water storage, impoundments and their associated structures, through which a water supply is obtained, stored, and sold or distributed for domestic uses; or the system of wells, diversions, pipes, structures, and facilities, including impoundments, through which a water supply is obtained which will be used directly or by trade, substitution, augmentation or exchange, for water which will be used for human consumption or household use.. . . .” Accordingly, because the Project water pipeline and its appurtenances are excluded from the definition of “applications for development” under C.R.S. § 24-65.5-102(2)(a), the certification concerning qualifying surface development requirement under C.R.S. § 24-65.5-103.3(1)(b) is not applicable to this application.

The AASI Application Checklist reference Section 6-07-02 of the Adams County Development Standards and Regulations (Regulations), dated December 8, 2020 for AASI Application Checklist items 13 through 22. Regulation section content requirements are included in verbatim text from the Regulations and are presented in bold italicized font, where applicable. Thornton’s corresponding responses follow below in regular font.

13 Information Describing the Applicant

The names, addresses, email address, fax number, organization form, and business of the Applicant, and if different, the owner of the Project.

Thornton is the Owner and Applicant of the Project, and is a Colorado home rule municipality that provides, amongst other services, domestic water service to its customers in its service area in Adams County, Colorado.

Thornton Administration
City Manager
Kevin S. Woods
9500 Civic Center Drive
Thornton, Colorado 80229
Phone: 303-538-7002
Email: Kevin.Woods@ThorntonCo.gov

Thornton – Infrastructure Executive Director
Brett Henry
12450 Washington Street
Thornton, Colorado 80241
Phone: 720-977-6404
Email: Brett.Henry@ThorntonCo.gov

Project Key Personnel
Thornton – Project Director and Infrastructure Engineering Director
Jason Pierce
12450 Washington Street
Thornton, Colorado 80241
Phone: 720-977-6233
Fax: 720-977-6201
Email: Jason.Pierce@ThorntonCo.gov

Thornton – Project Engineer
John Himyak
12450 Washington Street
Thornton, Colorado 80241
Phone: 720-977-6264
Fax: 720-977-6201
Email: John.Himyak@ThorntonCo.gov

Thornton - Project Manager
Eduardo Moreno
12450 Washington Street
Thornton, Colorado 80241
Phone: 720-977-6272
Fax: 720-977-6201
Email: Eduardo.Moreno@ThorntonCo.gov

The names, addresses and qualifications, including those areas of expertise and experience with projects directly related or similar to that proposed in the application package, of individuals who are or shall be responsible for constructing and operating the Project.

The following provides contact information for key personnel for the Thornton's water system operations and for the consulting engineer designing the Project. Qualifications are presented in subsequent subsections.

Facility Operations

Thornton employs Colorado Certified Water Professional staff that are qualified and certified to operate its domestic water delivery systems.

Thornton's lead operators for these systems are as follows:

- Steve Crow, Utility Maintenance Supervisor – Class 4 Water Distribution Certification
- Martin Kimmes, Water Treatment and Quality Manager – Class A Water Plant Operator Certification

Thornton currently operates the following facilities as part of its domestic water delivery system:

- Two advanced water treatment plants with a combined capacity of 70 million gallons per day
- Over 580 miles of treated water transmission pipelines with diameters up to 60 inches
- Approximately 16.5 miles of raw water transmission pipelines with diameters up to 48 inches
- Seven treated water pump stations with capacities up to 94.71 million gallons per day
- Seven raw water pump stations with capacities up to 60 million gallons per day

Construction Phase

Thornton has not selected a construction contractor for construction of the Project. Thornton has pre-qualified construction contractors that will be permitted to bid on the work based on the following relevant criteria:

1. Equipment and resources available to perform the work properly and expeditiously within the time available;
2. Financial resources to meet obligations incidental to the work;
3. The construction firm's track record of successful project completion for similar projects, with minimal interference to the public or any public complaints, as demonstrated through references;
4. Appropriate technical experience of the firm's key-personnel (resumes of key personnel detailing similar experience on other projects);
5. The firm's safety program and safety record on completed and ongoing projects (include proof of Experience Modification Rating [EMR]), Total Recordable Incident Rates (TRIR), Days Restricted Time (DART), and any fatalities in the last three years;
6. Track record working/dealing with several Governmental, multi-jurisdictional permitting agencies for a single project;
7. Successful completion of at least three water conveyance pipeline projects of a similar size and scope. Qualifying projects shall include installation of 48-inch diameter or larger pipeline, a minimum of 10,000 linear feet (each project). Two of the three projects must be within the State of Colorado or within the Western United States. Projects of similar nature shall exceed $30,000,000 in contract value;
8. Successful completion of at least two bored pipeline installations crossing a flowing river or active waterway of similar size to the St. Vrain or Platte Rivers. Projects presented as qualifying experience may also be used for qualifying experience for this item. This work may have been performed by a subcontractor;

9. Qualifying projects must have been performed for municipalities or quasi-municipal water district clients, or for industrial type applications such as mining. Projects performed for developers or private entities will not be considered as qualifying projects;
10. Qualifying projects must have demonstrated the existence of a successful relationship with public agencies as determined by references;
11. Bonding capacity per project must be $45,000,000 or higher. Note that some of the construction packages may be in the range of $60,000,000. Construction contractors may bid on construction packages up to their bonding limit, based on the Engineer's cost estimate for construction for each of the bid packages. The construction contractor shall have the ability to bond this project at 100 percent (%) of the construction value; and
12. Experience on similar projects. Projects must include steel water conveyance pipelines and/or pump stations and have been constructed for a municipality, quasi-governmental agency. All qualifying experience and projects must have been completed within the past eight years.

Design Phase

Thornton Engineer and Project Management

Thornton – Project Engineer
John Himyak
12450 Washington Street
Thornton, Colorado 80241
Phone: 720-977-6264
Fax: 720-977-6201
Email: John.Himyak@ThorntonCo.gov

Thornton – Project Manager
Eduardo Moreno
12450 Washington Street
Thornton, Colorado 80241
Phone: 720-977-6272
Fax: 720-977-6201
Email: Eduardo.Moreno@ThorntonCo.gov

Consulting Engineer

AECOM – Consulting Engineer, Project Manager
Bill Wemmert, PE
7595 Technology Way, Suite 200
Denver, CO 80237
Phone: 303-478-7343
Email: Bill.Wemmert@aecom.com

AECOM – Consulting Engineer, Project Engineer
Curt Thompson, PE
7595 Technology Way, Suite 200
Denver, CO 80237
Phone: 303-796-4726
Email: Curt.Thompson@aecom.com

AECOM – Consulting Engineer, Project Engineer
Martin Garcia, PE
7595 Technology Way, Suite 200
Denver, CO 80237
Phone: 303-842-9288
Email: Martin.Garcia@aecom.com

Authorization of the application by the Project Owner, if different than the Applicant.

Thornton is both the Project Owner and the Applicant.

Documentation of the Applicant's financial and technical capability to develop and operate the Project, including a description of the applicant's experience developing and operating similar projects.

Thornton has operated a water utility since 1963, and as Colorado's fifth largest provider of treated domestic water (based on annual treated water production), Thornton has proven experience and capability to develop and operate the Project, both from a financial and technical standpoint.

Thornton's current water system includes:

- Two advanced water treatment plants with a combined capacity of 70 million gallons per day.
- Over 580 miles of treated water transmission pipelines with diameters up to 60 inches.
- Approximately 16.5 miles of raw water transmission pipelines with diameters up to 48 inches.
- Seven treated water pump stations with capacities up to 94.71 million gallons per day.
- Seven raw water pump stations with capacities up to 60 million gallons per day.

Thornton's Water Utility Enterprise currently employs 82 staff members to operate its water system.

Thornton in 2014 determined to construct the TWP and initiated a study to establish the rates and fees needed to fund the TWP and subsequently set rates and fees to ensure TWP funding.

Thornton also added staff resources to manage TWP implementation. Currently, the staff dedicated to the TWP include the following:

- Jason Pierce – Project Director: Over 20 years of experience in the design and construction of civil, water and wastewater capital improvement projects
- John Himyak – Project Engineer: Licensed engineer with over 32 years of experience on large projects including pipeline/ tunneling projects
- Chuck Seest – Project Support Manager: Licensed CPA with over 30 years of experience in municipal and capital project finances

Thornton has contracted with Jacobs Engineering, Inc. (Jacobs) for Owner's Advisor services to assist with planning and management of the TWP. Jacobs is a multi-national engineering firm with extensive experience in major pipeline projects.

Thornton has contracted with several large engineering design firms to design various components of the TWP.

Thornton has completed 7 miles of construction of the TWP water pipeline in the towns of Johnstown and Windsor and has another 54 miles of TWP water pipeline currently being designed.

Thornton has a formal policy of maintaining six months of cash to meet expenses. Thornton also has a history of adjusting tap fees for new connections and water rates for ongoing consumption by existing customers in order to meet capital and operating expenses, including debt service payments.

Thornton's Water Enterprise currently has the following ratings: Moody's – "Aa2" and Standard & Poor's – "AA / Stable". The combination of prudent management policies and strong credit ratings allows Thornton to achieve the lowest possible interest rates when financing the TWP.

All related annual appropriations to fund the TWP are reviewed by Thornton's Finance and Budget Departments and included within the overall City Budget, which is reviewed and voted upon for approval by the Thornton City Council.

14 Information Describing the Project

The TWP is a proposed water delivery system that will bring water purchased by Thornton in the 1980s from the WSSC system through Larimer, Weld, and Adams counties to Thornton's treatment plant. This Submittal Report describes Segment A of the TWP located within Adams County and Thornton jurisdictional areas from 168th Avenue on the north to the Wes Brown Water Treatment Plant located north of 86th Avenue at the south end of the TWP. Segment A is designed in two packages (Phase I and Phase II) to potentially provide alternative project construction timing, such as to allow earlier construction in areas of ongoing development. Segment A extends from the intersection of Quebec Street and 168th Avenue to the Wes Brown Water Treatment Plant. Figure 1 and Figure 2, located in Appendix D, illustrate the water pipeline alignment.

The portion of Segment A within unincorporated Adams County, the Project, includes approximately 3.6 miles of a buried 42-inch diameter water pipeline capable of conveying 40 million gallons per day and associated appurtenances. Project appurtenances include buried fiber optic cable, pipeline cathodic protection system, and various buried water pipeline structures and valve vaults including access manways, blow-off assemblies, air release vaults, and isolation valve vaults. The Project extends from the intersection of Quebec Street and 168th Avenue to Thornton's Wes Brown Water Treatment Plant located near the intersection of Colorado Boulevard and 86th Avenue. Figure 1 and Figure 2, located in Appendix D, illustrate the Project water pipeline alignment. The figures identify Thornton's jurisdiction with a hatch pattern and Adams County jurisdiction without the hatch pattern.

The water pipeline will be buried at a minimum depth of 5 feet below grade. The depth of bury will vary based on existing utility crossings, road crossings, water crossings, other existing or proposed features, and property owner's reasonable preferences. Areas disturbed for construction of the water pipeline will be restored to pre-construction grades and revegetated to pre-construction vegetation where appropriate after construction. Typically, the Project consists of a 50-foot permanent easement for the water pipeline and an additional 40-foot temporary easement for construction.

Detailed plans and specifications of the Project.

The following Thornton variance request and Adams County response is documented in an Adams County Memorandum, dated April 22, 2021, from Layla Bajelan, included in Appendix A.

Thornton requested a variance on this topic as follows:

> Thornton requests that Adams County confirm that this submittal requirement can be considered a condition precedent for construction as part of the Intergovernmental Agreement ("IGA"). Thornton will be constructing the Thornton Water Project between 168th Avenue and 86th Avenue in two non-concurrent packages. Requiring detailed plans and specifications prior to approval of the IGA would unnecessarily delay construction of the first package.

Adams County response:

> Adams County will require that the City of Thornton submit detailed plans and specification of the project at the time of submittal. This information will be required for the County to enter into and IGA with the City. Detailed construction plans can be submitted as a condition precedent.

Project plans are included in Appendix E-Current Project Plans. For this submittal, the site plans are generally the 75% design level documents. These site plans reflect the current water pipeline alignment. Issue for Construction plans and specifications for the Project will be provided to Adams County prior to start of construction.

Descriptions of at least three (3) or more alternatives to the Project that were considered by the Applicant.

Multiple alternative water pipeline alignments from 168th Avenue to approximately 140th Avenue were considered to address impacts to developed and undeveloped property and to evaluate alternative crossings of the E-470 (highway) corridor. These alternative water pipeline alignments covered an east-west area from the Quebec Street corridor to the Monaco Street corridor. The Quebec Street corridor was selected as the

preferred alignment for the water pipeline from 168th Avenue to 120th Avenue. These alternative alignments are illustrated in Figure 3- Alternative Alignments, located in Appendix D. The alternative alignments technical memorandum is included in Appendix D.

Five alternative Project alignments extending from 120th Avenue on the north to the Wes Brown Water Treatment Plant were evaluated for various qualitative and quantitative criteria including impacts to roadways and right-of-way, public property and private property, land use, existing utilities, and use of existing utility corridors. The alternative analysis evaluated water pipeline alignments within an area generally from Riverdale Road/McKay Road on the east to Colorado Boulevard on the west. The alternative water pipeline alignments are illustrated on Figure 4, Alternative Alignments, located in Appendix D. Goals and objectives from the Imagine Adams County planning documents were included in the alignment evaluation by including ratings and ranking considerations that addressed Adams County's objectives to avoid introducing changes, easements, and road impacts to Riverdale Road. Given the proximity of some of the alternative water pipeline alignments to Riverdale Road, the Adams County's Riverdale Road Corridor Plan was a key consideration in the planning and evaluation of the alternative water pipeline alignments located near Riverdale Road. Following the evaluation and review by Thornton, a water pipeline alignment focusing on paralleling the existing Xcel Energy powerline corridor was selected as the preferred water pipeline alignment.

Schedules for designing, permitting, constructing, and operating the Project including the estimated life of the Project.

The following are estimated milestone dates for Segment A:

Design and Permitting	Nov 2019 – March 2022
Bid and Award	March 2022 – June 2022
Construction	June 2022 – Feb 2024
Segment A Startup and Operation	May 2024

Thornton has no intent to reclaim, phase out, or decommission the Project. The Project will be maintained, monitored, and repaired/replaced as needed.

The need for the Project, including existing/proposed facilities that perform the same or related function; and population projections or growth trends that form the basis of demand projections justifying the Project.

The purpose of the TWP is to convey domestic water from the WSSC system in northern Colorado purchased by Thornton in the mid-1980s to Thornton to enhance Thornton's water supply reliability and drought resiliency, help address source water quality issues, and meet municipal and industrial demands of Thornton's water customers through 2065.

Thornton's population is projected to increase from its current estimated population of 146,427 residents (Thornton, Housing and Population Report: 2020 4th Quarter) to 242,000 residents by 2065. Thornton has proactively planned for the anticipated population increase to ensure that Thornton can provide a reliable, high quality, and cost-efficient water supply to meet the needs of its residents and businesses. Thornton's existing water system, including an extensive water conservation program, has served to meet municipal and industrial water needs of Thornton's current water customers in its service area, as well as to meet existing contractual obligations. Thornton water supply projects in development will allow Thornton to provide water service up to a population of 158,000 residents. Beyond 158,000 residents, which Thornton projects to reach by 2025, additional water supplies are needed to ensure reliable water service to Thornton's water customers. Water from the WSSC system has been decreed in Water Court for use in Thornton, but Thornton currently lacks the infrastructure to deliver that water to Thornton. The TWP will provide the necessary infrastructure for delivery of this water to Thornton and the means by which Thornton's customers will receive the benefit of Thornton's decades-long planning for and investment in this additional water supply. The TWP is being configured to deliver an average of 14,000 acre-feet of water annually, which is sufficient to meet the municipal and industrial demands of Thornton's water customers

through 2065. In addition to meeting water demand, in adding this high-quality source, the TWP provides enhanced water supply diversity, reliability, quality, and drought resiliency to Thornton's supply.

Description of all conservation techniques to be used in the construction and operation of the Project.

Segment A is developed to minimize the Project footprint within unincorporated Adams County and minimize impacts to residents, the public, and the natural environment. Conservation considerations have been addressed during the Project concept development and design, and are applied during the Project construction, and subsequently through the operational life of the facility. Adams County planning documents were utilized to help establish the design criteria so they could be incorporated into the development of the Project. Examples of conservation through design and construction implementation include:

- Development of the Project alignment to minimize impacts to residential development and the public by avoiding developed areas and impacts to existing roadways in unincorporated Adams County.
- Minimization of utility and construction related impacts to high quality agricultural lands. The location of the water pipeline was developed to minimize impacts to agricultural lands by following property lines and utilizing existing utility corridors where possible.
- Implementation of Best Management Practices (BMP) for management and control of stormwater runoff, soil erosion and sediment control is addressed by the stormwater management plans. These plans have been developed in conjunction with requirements of Adams County Regulations and the Sustainability Initiatives and Natural Resources policies from the Adams County Comprehensive Plan.
- Riparian, wetland and drainageway construction impacts are minimized by utilizing construction setbacks, limiting construction work areas, and restoring these areas to pre-existing grading sections and appropriate surface restoration.

The TWP's operational conservation approach is guided by Thornton's Sustainability Action Agenda which identifies eight action areas in which Thornton seeks to advance sustainability efforts. Included among these are Climate Action and Carbon Free Energy Supply. Thornton's Climate Action goals include reducing communitywide greenhouse gas emissions by 50% from 2018 levels by 2030, and making infrastructure more resilient to climate change impacts. Thornton's Carbon Free Energy Supply goals include promoting new renewable energy projects throughout the community, as well as pursuing renewable energy sources for Thornton facilities and operations where sources are cost-neutral, cost-beneficial, and/or useful to hedging against future rate increases. Thornton is exploring opportunities to advance these goals as it pursues all of its water infrastructure projects, including the TWP.

Thornton has historically maintained one of the lowest residential daily per capita water consumption rates among cities in the Front Range. This is a result of efforts that Thornton has pursued over the past 20 years to create and instill solid water conservation ethic throughout the community. Thornton is currently implementing its 2018 Water Efficiency Plan, which builds upon the successes of the past by pursuing strategies to promote water efficient technologies and help change customer water use behaviors over the long term. Thornton's water efficiency programs provide assistance to customers in the form of education and incentives, including rebates and free programs, that are designed to increase water use efficiency. Thornton's water utility is also upgrading its infrastructure and practices to increase system efficiency, including installing Advanced Metering Infrastructure and high-resolution meters, and integrating water leak technologies into its operations.

15 Property Rights, Permits and other Approvals

A list and copies of all other federal, State and local permits and approvals that have been or shall be required for the Project, together with any proposal for coordinating these approvals with the County permitting process.

The overall permitting strategy for the TWP (including the Project) is to employ design and construction methods that avoid or minimize environmental impacts. Table 1 summarizes the permits and regulatory approvals that are anticipated to be required for the Project.

Table 1. Summary of Permits and Approvals

Permits / Approvals	Status
Federal Agencies	
Clean Water Act Section 404 Permit	Thornton will apply for applicable USACE Nationwide Permits for water body crossings of Waters of the United States (jurisdictional waters) to allow for open-cut construction. If a Nationwide Permit is not obtained, USACE will be consulted before construction, and concurrence with USACE will be obtained that no permit is required for crossing jurisdictional waters and crossing will be constructed with trenchless construction methods. A Jurisdictional Determination Request for Segment A is under review by the USACE Denver Regulatory Office.
Endangered Species Act Section 7 Consultation Migratory Bird Treaty Act	The Project alignment is being configured to not impact federally listed threatened or endangered (T&E) species. No habitat for any federally listed species is present in the Project area as described in the Natural and Cultural Resources Assessment report in Appendix I. Informal consultation will be conducted with the United States Fish and Wildlife Service (USFWS) to get concurrence that USFWS has no concerns related to T&E species and species protected by the Migratory Bird Treaty Act and that no further consultation is required for the Project.
State Agencies	
Clean Water Act Section 402 Construction Stormwater General Permit	The construction contractor will obtain a Construction Stormwater General Permit from the Colorado Department of Public Health and Environment (CDPHE) prior to construction and implement procedures outlined in the Project stormwater management plan included in the Project construction documents.
General Permit for Construction Dewatering Activities	A General Permit for Construction Dewatering Activities will be obtained by the construction contractor from the CDPHE prior to construction.
Construction Permit or General Construction Permit, Land Development Projects	A Land Development Air Pollutant Emissions Notice (APEN) will be submitted to CDPHE, Air Pollution Control Division and applicable construction-related Colorado air permits will be obtained by the construction contractor prior to construction. The construction contractor will apply for and obtain either a Construction Permit or a General Construction Permit as required based on contractor's means and methods for construction.
Section 106 of the National Historic Preservation Act	If required, the USACE will consult with the State Historic Preservation Office (SHPO) on National Historic Preservation Act Section 106 compliance as part of the 404-permitting process.
State Sensitive Species and Raptors	Habitat for black-tailed prairie dogs likely occurs along the Project and may be temporarily impacted during construction. Additionally, suitable habitat for Western burrowing owl may occur along the Project since they often nest in abandoned prairie dog burrows. Field surveys will be conducted to map existing prairie dog colonies and determine the extent of any required temporary displacement/relocation ahead of construction activities. Activities will be coordinated with Colorado Parks and Wildlife (CPW) as required. Raptor nests may be present along the Project. Field surveys have been conducted in 2021 to map existing nests along the Project alignment, and then will be conducted again in 2022 prior to construction. Thornton will coordinate with CPW to verify appropriate methods to avoid or minimize impacts to raptor nests.
Adams County	
Adams County Open Space	Thornton has coordinated with Adams County Open Space representatives for review of the Project water pipeline alignment. The design of the Project has been revised to address comments. Adams County Open Space representatives concurred with the location of the water pipeline and associated permanent and temporary easements on Adams County-owned property.
Adams County Access Permit	Thornton is coordinating with Adams County to review access points from Adams County roads for Segment A construction operations. Proposed Access Points are shown on Appendix K. Drainage culvert requirements will be reviewed as part of the permit.
Adams County Utility Street Cut Permit	Utility Street Cut permits will be required from the Adams County Public Works Department. Thornton is coordinating with Adams County in advance of construction for the requirements of these permits. The construction contractor will obtain the permit.
Adams County Clearing and Grading Permit	Thornton is coordinating with Adams County to review the requirements for the permit. An Adams County Engineering Review of the permit application may be required.

Table 1. Summary of Permits and Approvals

Permits / Approvals	Status
Adams County Development Engineering Review and Requirements	An Adams County Engineering Review of the permit application may be required. Project plans are included with this submittal document in Appendix E.
Adams County Infrastructure Permit, Underground Utility Permit	Thornton is coordinating with Adams County to review the requirements for this permit. An Adams County Engineering Review of the permit application may be required.
Adams County Stormwater Quality Permit	Thornton is coordinating with Adams County to review the requirements for the permit and compliance with the requirements of Adams County Municipal Separate Storm Sewer System (MS4) permit. An Adams County Engineering Review of the permit application may be required.
Adams County Floodplain Use Permit	Temporary or permanent impacts within the floodplain will require submission of a Floodplain Use Permit, which will be supported by a No-Rise Certification memorandum.
Adams County 1041 Review and Requirements	This submittal document is intended to provide Adams County with the information required to review the Project.

Copies of all official federal and State consultation correspondence prepared for the Project; a description of all Mitigation required by federal, State and local authorities; and copies of any draft or final environmental assessments or impact statement required for the Project.

The following Thornton variance request and Adams County response is documented in an Adams County Memorandum, dated April 22, 2021, from Layla Bajelan, included in Appendix A.

Thornton requested a variance on this topic as follows:

> Thornton requests that Adams County confirm that this submittal requirement can be considered a condition precedent for construction as part of the IGA. Thornton and its engineers and contractors will have correspondence with federal, state and local authorities, and will be determining appropriate mitigation, up to start of construction. The TWP is being configured and designed to not require any federal environmental assessments or impact statements. Requiring this information prior to approval of the IGA would unnecessarily delay the TWP.

Adams County response:

> The County will accept these submittal items as a Condition Precedent but reserves the right to request documentation during the review process that it deems necessary for a complete review and approval.

Agency consultation correspondence will be provided prior to construction and will include correspondence from the following agencies if applicable:

- USFWS
- CPW
- USACE

Description of the water to be used by the Project and alternatives, including the source, amount, the quality of such water, the Applicant's right to use the water, including adjudicated decrees, applications for decrees, proposed points of diversion, and the existing uses of water. If an augmentation plan has been filed in court, the applicant must submit a copy of that plan.

The following Thornton variance request and Adams County response is documented in an Adams County Memorandum, dated April 22, 2021, from Layla Bajelan, included in Appendix A.

Thornton requested a variance on this topic as follows:

> Thornton requests that Adams County waive this submittal requirement. The TWP is the siting and construction of an underground water conveyance pipeline that will not itself "use" water.

Adams County response:

> Due to the nature of this request, the County will waive this requirement. The City of Thornton has previously received approvals for the water rights and the beginning and end storage facilities. This request will only be conveying water from one approved location to another.

Regional Water Quality Management Plan: Provisions of the regional Clean Water Plan, promulgated by the Denver Regional Council of Governments, that apply to the Project and assessment of whether the Project would comply with those provisions.

The following Thornton variance request and Adams County response is documented in an Adams County Memorandum, dated April 22, 2021, from Layla Bajelan, included in Appendix A.

Thornton requested a variance on this topic as follows:

> Thornton requests that Adams County waive this submittal requirement. The TWP is the siting and construction of an underground water conveyance pipeline that has no wastewater impacts. In addition, the Denver Regional Council of Governments no longer has a regional Clean Water Plan.

Adams County response:

> Adams County will waive this requirement, as the water being conveyed is clean and meant for domestic use. In additions, the County acknowledges that the Denver Regional Council of Governments no longer has a regional Clean Water Plan.

16 Financial Feasibility of the Project

The following Thornton variance request and Adams County response is documented in an Adams County Memorandum, dated April 22, 2021, from Layla Bajelan, included in Appendix A.

Thornton requested a variance on this topic as follows:

> Thornton requests that Adams County waive this submittal requirement. The City of Thornton operates a Water Utility Enterprise under the direction of the Thornton City Council. The Water Utility Enterprise funds its cost-of-service operations through rates and fees charged to the customer of the Water Utility Enterprise. The City Council has identified the funding required for the TWP and has established rates and fees to cover the expenses of the Project, as well as the capital and operating expenses of the remainder of the Water Utility Enterprise.

Adams County's response to the variance request is as follows:

> Adams County will require that the applicant submit the documentation that the City Council approved when identifying the funding required for the Project.

Appendix H includes documentation of Thornton City Council ordinances appropriating money for the Water Fund for each of the years 2016 through 2021, and the pages from the associated years' Budget Book that shows how much of the Water Fund appropriation was allocated to the TWP.

The estimated construction costs and period of construction for each Development component.

The estimated cost of the Project is $17.7 million. The construction schedule for Segment A is as follows:

Construction	June 2022 – Feb 2024
Segment A Startup and Operation	May 2024

Revenues and operating expenses for the Project.

There are no revenues specifically associated with the TWP. Thornton collects revenue pursuant to the rates and fees set by the Thornton City Council for providing water service to Thornton's customers.

Operating expenses for the Project will be funded by Thornton's Water Utility Enterprise as part of the overall operation and maintenance of Thornton's domestic water delivery system. The Water Utility Enterprise is funded through rates and fees charged to Thornton's water customers.

The amount of any proposed debt and the method and estimated cost of debt service.

Though not specifically associated with the Project, Thornton anticipates issuing revenue bonds for construction of the TWP in the amount of up to $150,000,000, with related annual debt service payments estimated at $8,300,000 to be paid through rates and fees collected by the Water Utility Enterprise.

Details of any contract or agreement for revenues or services in connection with the Project.

Service is provided pursuant to Thornton's Charter and City Code. Rates and fees collected for service are used to fund Thornton's cost-of-service domestic water delivery system.

Description of the persons or entity(ies) who shall pay for or use the Project and/or services produced by the Development and those who shall benefit from any and all revenues generated by it.

The customers that receive water service from Thornton's Water Utility Enterprise both fund and receive the benefit of the water provided by Thornton's cost-of-service domestic water delivery system.

Cost of all mitigation measures proposed for the Project.

The Project construction phase will incorporate several measures to mitigate impacts of the construction on the Project site and area residences and businesses. These mitigation measures include stormwater management BMP in compliance with Adams County guidance, control of fugitive dust, noise monitoring for compliance with Adams County noise ordinances, and authorized Project work hours. The estimated cost for these mitigation measures is $1,225,000.

Detailed description as to how the Project shall be financed to show that the Applicant has the ability to finance the Project.

Thornton anticipates cash funding up to $300,000,000 of the TWP costs. Thornton anticipates issuing revenue bonds in the amount of up to $150,000,000, with related annual debt service payments estimated at $8,300,000, to cover the portions of the TWP that will not be cash funded. The following presents reporting from Standard & Poor's:

Per the Standard & Poor's rating report for Thornton Water/ Sewer dated October 1, 2020 that assigned a rating of "AA/ Stable", – "The rating (AA) reflects our view of the water enterprise's general creditworthiness of its very strong enterprise risk profile and extremely strong financial risk profile. The city has a predominantly residential customer base, with affordable service rates and adequate operational capacity to meet current demand. To meet the financing requirements of the TWP (a large-scale water infrastructure project which will deliver significant water resources), we recognize that the system has strategically built close to 5 years of cash through fiscal 2020, and will steadily draw down cash reserves to roughly 1.5 years in the near future."

The rating report continues "The stable outlook reflects our view that the city will continue to adjust rates to fund the large capital plan of its water system, while maintaining its very strong all-in coverage metrics and liquidity position. In addition, our outlook reflects our opinion of the strength of management policies and our expectation that the management will continue to preserve the system's financial profile and meet pay-as-you-go capital requirements. In addition, we believe the financial profile cold withstand a short-term decline in revenue from changing economic conditions, particularly uncertainty related to COVID-19."

The report continues "The city's water fund pro forma debt-to-capitalization is moderate, at 27% after including the additional leverage in the near future."

17 Land Use

Description of existing land uses within and adjacent to the Impact Area

Aerial mapping presented in Figure 1 and Figure 2 in Appendix D illustrates the type of land use and infrastructure development on each parcel crossed by the Project as of mid-2019. The parcel identification information crossed by the Project are presented on Figure 5 and Figure 6 in Appendix D. Table 2 provides identification of associated land use for those parcels. Land use within and adjacent to the Project Impact area are agricultural, residential, public/quasi-public, and municipal areas of Thornton. As defined by Adams County the Impact Area addressed in this report are those geographic areas, including the development area, within 500 feet of the Project. Parcels that are currently platted or planned for future residential development are described in Table 2.

Table 2. Land Use of Parcels Crossed by the Project

Affected Adams County Parcel Figure 5 and Figure 6 Map Identification Number (ID)	Owner and Land Use	Comments
(1)	Owner ERN LIMITED PARTNERSHIP ET AL (ERN) PARCEL NOs: 0157104200003, 0157104300002 Land Uses Current: Agricultural	Land accommodates oil and gas facilities and grazing activities. Project located in easement.
(2)	Owner TODD CREEK VILLAGE PARK / RECREATION DISTRICT PARCEL NO: 0157105404044 Land Uses Current: Residential	Project is proposed to be located within the current Todd Creek Village landscape buffer and the future planned Thornton Quebec Street right-of way
(3)	Owner QUEBEC 7 LLC PARCEL NO: 0157108000004 Land Use Current: Agricultural	Property is platted for a residential subdivision. Project is proposed to be located within the future planned Thornton Quebec Street right-of-way
(4)	Owner SHAFFER JANET L UND 1/2 INT AND AYLOR JOHN L JR TRUST THE UND 1/2 INT PARCEL NO: 0157120001007 Land Use Current: Residential	Project located in easement, a portion of which is in future ROW
(5)	Owner FITTS DANNY AND SHEPHERD FRANCES PARCEL NO: 0157133010001 Land Use Current: Residential	Project located in easement
(6)	Owner BISHARD AMERICA PARCEL NO: 0157132400009 Land Use Current: Agricultural	Project located in easement
(7)	Owner MC CLENDON MICHAEL W AND RODENZ PATRICIA A PARCEL NO: 0157132400008 Land Use Current: Residential	Project located in easement

Table 2. Land Use of Parcels Crossed by the Project

Affected Adams County Parcel Figure 5 and Figure 6 Map Identification Number (ID)	Owner and Land Use	Comments
(9)	Owner CLEAR CHANNEL BROADCASTING INC. PARCEL NOs. 0172105200004, 0172105200006 Land Use Current: Agricultural	Project located in easement. Parcel is in platting for future subdivision; Land accommodates broadcasting antenna towers
(10)	Owner MC INTOSH ROBIN L JR PARCEL NO. 0172105000047 Land Use Current: Agricultural	Project located in easement
(11)	Owner RICHARD H. AND JUANITA M. LARSON PARCEL NO. 0172108000048 Land Use Current: Agricultural	Project located in easement
(12)	Owner ADAMS COUNTY BOARD OF COUNTY COMMISSIONERS PARCEL NO. 0172108200003 Land Use Current: Public/Quasi Public	Project located in easement
(13)	Owner ADAMS COUNTY - ADAMS COUNTY PARKS (ATTN RICK ANDERSON) PARCEL NOs. 0172108200006, 0172108000034 Land Use Current: Public/Quasi-Public	Project located in easement
(14)	Owner ADAMS COUNTY PARCEL NO. 0172108300003 Land Use Current: Public/Quasi-Public	Project located in easement
(15)	Owner LEON MIKE PARCEL NO. 0172118100001 Land Use Current: Agricultural	Project located in easement
(16)	Owner PUBLIC SERVICE CO OF COLORADO C/O PROPERTY AND LOCAL TAXES PARCEL NO. 0172117000014 Land Use Current: Public/Quasi Public	Project located in easement. Land accommodates powerline transmission towers
(17)	Owner PUBLIC SERVICE CO OF COLORADO C/O PROPERTY AND LOCAL TAXES PARCEL NO. 0172117000015 Land Use Current: Public/Quasi Public	Project located in easement. Land accommodates powerline transmission towers
(18)	Owner PUBLIC SERVICE CO OF COLORADO C/O PROPERTY AND LOCAL TAXES PARCEL NO. 0172117000034 Land Use Current: Public/Quasi-Public	Project located in easement. Land accommodates powerline transmission towers

Table 2. Land Use of Parcels Crossed by the Project

Affected Adams County Parcel Figure 5 and Figure 6 Map Identification Number (ID)	Owner and Land Use	Comments
(19)	Owner PUBLIC SERVICE CO OF COLORADO C/O PROPERTY AND LOCAL TAXES PARCEL NO. 0172130000048 Land Use Current: Public/Quasi-Public	Project located in easement. Land accommodates powerline transmission towers

Note:

*Land Use information is based on Adams County GIS Data dated December 22, 2021 from Adams County website https://data-adcogov.opendata.arcgis.com/datasets/9f04f793f9764b44be2fa29036959a84_0/explore?location=39.856295%2C-104.937375%2C17.00

Description of provisions from local land use plans that are applicable to the Project and as assessment of whether the project shall comply with those provisions.

The Adams County Comprehensive Plan, Imagine Adams County (adopted December 2012), was reviewed during the development of this Submittal Report. The Adams County Comprehensive Plan is the official policy document of the Adams County Planning Commission and Board of County Commissioners. and consists of four distinct but integrated components: 1) Comprehensive Plan Update; 2) Transportation Plan Update; 3) Hazard Mitigation Plan, and 4) Open Space, Parks, and Trails Master Plan. The Adams County Comprehensive Plan and the companion documents Adams County Transportation Plan (adopted December 2012), Adams County Hazard Mitigation Plan (adopted December 2020), and the Adams County Open Space, Parks, and Trails Master Plan (adopted November 16, 2012) were reviewed for applicability to the Project. The Adams County Comprehensive Plan, the Adams County Hazard Mitigation Plan, and the Adams County Open Space, Parks, and Trails Master Plan were found to be applicable to the Project and discussion of compliance with those plans follows.

Adams County Comprehensive Plan

Goals

The Adams County Comprehensive Plan includes key goals for a more sustainable and resilient Adams County. The Project complies with the following goals:

Promote Coordinated and Connected Growth

A key objective of the Adams County Comprehensive Plan is to promote a more integrated approach to planning and decision-making to guide the location, type, and quality of future growth of the County; and the development of infrastructure needed to serve and connect that growth. The Adams County Comprehensive Plan provides a concise statement of Adams County's objectives for future development within unincorporated areas of Adams County and in municipal growth areas. Thornton's municipal growth areas fall within unincorporated Adams County. Thornton has proactively planned for the anticipated population increase to ensure that Thornton can provide a reliable, high quality and economical water supply to meet the needs of its residents and businesses. The TWP will provide the necessary infrastructure for delivery water to Thornton and provide the means by which Thornton's customers, including future customer within Thornton's municipal growth areas likely to be annexed by Thornton in the future, will receive the benefit of its decades-long planning and investment.

Protect the Health, Safety and Welfare of Adams County Inhabitants

Reasonable measures to ensure that the health, safety, and welfare of the inhabitants of Adams County will be protected, and to mitigate or minimize potential adverse impacts from the Project are included in the Environmental Impact Analysis sections of this report. Emergency vehicle access needs will be maintained, and construction activities coordinated with local fire departments, police departments, ambulance services,

and other emergency responders as necessary. Thornton places a high priority on safety during construction. Contractors will be required to initiate, maintain, and supervise safety precautions and programs associated with their work, which will include using proper and safe equipment to complete the work. Contractors will be required to take necessary precautions for safety and provide necessary protection to prevent damage, injury, or loss. In its contract with the Project contractors, Thornton will require that the Project contractors comply with applicable laws and regulations.

Foster Regional Collaboration and Partnerships

Thornton and Adams County are negotiating an IGA in lieu of AASI permit application and review for the Project.

Reduce the Fiscal Impact of Growth

The Project will not impact the tax burden or fee structure for any government services except municipal water supply, and then only for those water customers that are within the service area of Thornton's water utility (primarily within the city limits of Thornton). Adams County residents that are located within Thornton's water utility's service area and that receive water service from Thornton are subject to rates and fees established by the Thornton City Council.

Promote Economic Vitality

Thornton has proactively planned for the anticipated population increase to ensure that Thornton can provide a reliable, high quality and economical water supply to meet the needs of its residents and businesses. Those future businesses will provide job opportunities for Adams County residents.

Preserve the County's Natural Resources

Impacts to natural resources will be minimal and temporary during construction. BMPs will be implemented during construction to minimize impacts to natural resources. The Project alignment was established to maximize use of utilize existing utility corridors in order to limit new utility impacts to the area. The work zone will be fenced to the limits of the permanent and temporary easements to limit the area of disturbance. Large trees will be marked to be protected as is feasible. Areas of disturbance will be restored to pre-construction conditions, including restoring to existing grades and re-vegetation with appropriate seed mixes. Other reasonable measures to ensure that the natural resources of Adams County will be preserved, and to mitigate or minimize potential adverse impacts from the Project are included in the Environmental Impact Analysis sections and Appendix I of this report.

Policies

The Adams County Comprehensive Plan includes countywide policies that relate to the goals listed above. Countywide policies that the Project is consistent with include the following:

Policy 2.1 Cooperate with Municipal Growth Area Goals

Thornton's municipal growth areas fall within unincorporated Adams County. Thornton has proactively planned for the anticipated population increase to ensure that Thornton can provide a reliable, high quality and economical water supply to meet the needs of its residents and businesses.

Policy 2.2 Coordinate Public Services and Infrastructure

Thornton has coordinated the location of the Project with Adams County staff. Thornton has coordinated the location of the Project with other utilities and a portion of the Project parallels the existing Xcel Energy powerline corridor.

Policy 2.3 Promote Regional Cooperation

Thornton and Adams County are negotiating an IGA in lieu of AASI permit application and review of the Project.

Policy 4.1 Focus on Job Creation

Thornton has proactively planned for the anticipated population increase to ensure that Thornton can provide a reliable, high quality and economical water supply to meet the needs of its residents and businesses. Those future businesses will provide job opportunities for Adams County residents.

Policy 4.2 Strengthen the Economic Base

Thornton has proactively planned for the anticipated population increase to ensure that Thornton can provide a reliable, high quality and economical water supply to meet the needs of its residents and businesses. Those future businesses will provide job opportunities for Adams County residents.

Policy 5.1 Encourage Growth in a Fiscally Responsible Manner

The Project will not impact the tax burden or fee structure for any government services except municipal water supply, and then only for those water customers that are within the service area of Thornton's water utility (primarily within the city limits of Thornton). Adams County residents that are located within Thornton's water utility's service area and that receive water service from Thornton are subject to rates and fees established by the Thornton City Council.

Policy 6.1 Ensure New Development Pays for Infrastructure Costs

The Project will not impact the tax burden or fee structure for any government services except municipal water supply, and then only for those water customers that are within the service area of Thornton's water utility (primarily within the city limits of Thornton). Adams County residents that are located within Thornton's water utility's service area and that receive water service from Thornton are subject to rates and fees established by the Thornton City Council.

Policy 7.5 Protect Water Supplies

The TWP is a domestic water delivery system that will convey water from the WSSC system that was purchased by the Thornton in the mid-1980s to enhance Thornton's water supply reliability and drought resiliency, help address source water quality issues, and meet municipal and industrial demands of Thornton's water customers through 2065.

The Project will not impact other water supplies within unincorporated Adams County. Thornton will coordinate the Project crossings of existing water supply infrastructure, including water pipelines and irrigation facilities. Thornton will obtain appropriate agreements for crossings before construction.

Policy 7.8 Minimize the Impacts of New Utility Infrastructure

Impacts from the Project will be minimal and temporary during construction. BMPs will be implemented during construction to minimize impacts. The Project alignment was established to maximize use of utilize existing utility corridors in order to limit new utility impacts to the area. The work zone will be fenced to the limits of the permanent and temporary easements to limit the area of disturbance. Large trees will be marked to be protected as is feasible. Areas of disturbance will be restored to pre-construction conditions, including restoring to existing grades and re-vegetation with appropriate seed mixes. Other reasonable measures to ensure that the natural resources of Adams County will be preserved, and to mitigate or minimize potential adverse impacts from the Project are included in the Environmental Impact Analysis sections and Appendix I of this report.

Adams County Hazard Mitigation Plan

The purpose of the Adams County Hazard Mitigation Plan, December 2020 is to reduce or eliminate long-term risk to people and property from disasters or hazard events. The Hazard Mitigation Plan lists risks of significance as high, medium, or low based on the significance they pose to Adams County. Of those listed, only three are applicable to the Project. Mitigation measures will be implemented, and impacts related to hazard events will be negligible.

Flood

The Project crosses four designated 100-year floodplains in unincorporated Adams County based on Federal Emergency Management Agency (FEMA) Flood Insurance Rate Map (FIRM) Panels for Adams County, Colorado and Incorporated Areas. These areas include:

- Brantner Gulch, Plan Station 308+49 to 312+70, FIRM Panel 08001CO317H
- Direct Flow Area 0054-1, Plan Station 578+40 to 585+26, FIRM Panel 08001CO318J
- Direct Flow Area 0054-1, Plan Station 587+90 to 596+15, FIRM Panel 08001CO318J
- Grange Hall Creek, Plan Station 612+00625+40, FIRM Panel 08001CO318J

Floodplain crossings in unincorporated Adams County are shown on the plans in Appendix E.

The Project will not alter floodplains. The water pipeline will be buried a minimum depth of 5 feet below grade. Work conducted within the floodplain areas will be restored to pre-construction conditions and grades. Therefore, the Project design will mitigate impacts on the hydraulics and hydrology of the floodplain. Thornton will obtain Floodplain Development permits and other approvals as required for floodplain crossings from Adams County or other agency as required after design has progressed. Information will be provided to Adams County as required to obtain permits.

Floodplain crossings will utilize open-cut construction in the floodplain. Spoils from trench excavations, construction-related equipment, materials, and supplies will be stored outside of the 100-year floodplain per local floodplain regulations. Floodplain areas using open-cut construction will be restored to pre-construction grades and vegetation after construction.

Hazard Materials Incident

Construction, operation, and maintenance activities involving Thornton or the Project contractors bringing any hazardous materials onto the site will comply with applicable federal, state, and local laws and regulations regarding the handling, storage, disposal, transportation, and use of hazardous substances. In its contract with the Project contractors, Thornton will require that the Project contractors comply with applicable laws.

The Project includes the installation of a buried steel water pipeline, associated water pipeline appurtenances including precast vaults to house water pipeline control valves. The water pipeline will be installed with open-cut trench-type construction and some tunneled installations. Hazardous, toxic and explosive substances anticipated to be used, stored, and transported includes typical general infrastructure construction type materials including: fuels, lubricants, and hydraulic fluids to power and operate construction equipment and tools; cast-in-place concrete related materials such as form release agents and concrete curing compound; pipe tunneling drillings fluids; paints and solvents to paint miscellaneous smaller water pipeline appurtenances. There are no foreseeable impacts to the environment from the substances used for the construction of the Project.

Hazardous, toxic, and explosive substances are not anticipated to be used, stored, transported, disturbed or produced after Project construction is complete.

With respect to hazardous materials contamination that may be existing along the Segment A alignment, a site investigation within the Segment A Impact Area was conducted. An Environmental Records Review (ERR) of the Segment A Impact Area identified several oil and gas wells and/or operations Areas of Concern (AOCs) for potential soil and/or groundwater contamination. Because contaminated soils and/or groundwater were identified within the Project Impact Area and given the associated concerns with worker health and safety, construction materials handling, liability, and scheduling implications on Project construction, further investigation was warranted on several of the AOCs. A report presenting the results of the site investigations is included in Appendix L. In total, four AOCs associated with the Project Impact Area were investigated between May through July 2021. The report in Appendix L presents the rationale for the AOC investigation, the methods and procedures used to investigate, sample, and collect data for each area, and the evaluation of the data with respect to the proposed construction.

For additional information including proposed mitigation measures that may be implemented on the Project, see Section AASI Application Checklist, 19 Environmental Impact Analysis, Hazardous Material Description.

Subsidence

A desktop study was conducted of the geologic conditions and natural hazards that may be present along the water Project alignment. The desktop study included review of soil, geologic conditions, and natural hazards including soil types (collapsible and potentially swelling/expansive soils), drainage areas, slopes, avalanche areas, debris fans, mud flows, rockslide areas, faults and fissures, seismic history, and wildfire hazard areas.

Natural hazards identified through the desktop study along the water Project alignment include collapsible and expansive (swelling) soils and bedrock and drainage areas. Based upon our review of available published geologic data, natural hazards due to steep unstable slopes, avalanche, debris fans, mud flows, rockslide, faults and fissures, seismicity, and wildfire hazard are deemed unlikely along the water Project alignment.

The Project alignment was overlain on a surficial geology map using the geology published on the *Generalized Surficial Geologic Map of the Denver Area, Colorado* (Chase and McConaghy, 1972) and is included in Appendix J. Geology along the water Project alignment consists primarily of loess, eolian sand, colluvium, sand silt, gravel, clay alluvium, sandstone, claystone, and siltstone bedrock.

Collapsible soils are defined as any unsaturated soil that goes through radical rearrangement of particles and greatly decreases in volume upon wetting, additional loading, or both. Soils with collapse potential are typically eolian, loessial, subaerial, colluvial, mudflow, and alluvial derived. Appendix J includes a figure illustrating where collapsible soils are mapped by the Colorado Geological Survey (CGS), as shown by the yellow shaded areas labeled “Eolian (wind-blown) deposits”. The CGS map identifies eolian (windblown) deposits in portions of the water Project alignment from 168th Avenue to 120th Avenue that could have the potential for collapse.

As part of the Project design, a geotechnical investigation was conducted along the pipeline alignment to identify and evaluate existing soils. The geotechnical investigation included geotechnical soil borings to a depth of 15 feet (approximately 5 feet below the bottom of the pipe), located at approximately 500 foot intervals along the proposed Project alignment. In addition, at proposed sites for pipeline tunnel installation, additional geotechnical investigation borings were conducted at each end of the proposed tunnel to a depth of approximately 35 feet, or deeper depending on the depth of the tunnel and findings in the field at the time of the geotechnical investigation. The findings from the geotechnical investigation and laboratory analysis, and engineering evaluation and recommendations are described in geotechnical design reports prepared for the Project by Kumar and Associates and Lithos Engineering (Kumar, 2021; Lithos, 2021). The design recommendations for the pipeline, open-cut trench and tunnel excavation, over excavation, pipeline bedding, trench backfill, and trench stabilization are incorporated into the Project design plans and specifications.

Adams County Open Space, Parks, and Trails Master Plan

The Adams County Open Space, Parks, and Trails Master Plan identifies guiding principles to support Adams County’s over-arching understanding that the health of the natural environment, the strength of the community, and economic security are essential to Adams County's future. The Project complies with the following principles:

Natural Resource and Wildlife Habitat Protection

- ***Protect and enhance important ecological and scenic resources such as riparian areas, wetlands, floodplains, prairie grasslands and unique land forms.***
- ***Protect and enhance important and existing wildlife habitats and corridors, provide for species movement through the County.***

Impacts to riparian areas, wetlands, floodplains, prairie grasslands, and wildlife habitats will be minimal and temporary during construction. Mitigation measures will be implemented to minimize impacts. See Section AASI Application Checklist, 19 Environmental Impact Analysis and Appendix I for additional information.

Water Resources Protection and Enhancement

- ***Improve water quantity and quality to assure a continuing quality of life in Adams County by implementing stormwater management best practices to minimize runoff and encourage infiltration, protecting and enhancing wetland habitats and riparian zones.***
- ***Protect, in as natural a state as possible, floodplains and flood hazard areas for flood event conveyance and storage. Enhance these corridors with vegetation to reduce erosion and siltation.***
- ***Restore and enhance disturbed lands in and around river, creek and drainage corridors.***

Impacts to water resources will be minimal and temporary during construction. Required stormwater permits will be obtained from the Colorado Department of Public Health and Environment (CDPHE) and Adams County. A Stormwater Management Plan will be implemented in accordance with permit requirements. Project plans and specifications will contain erosion and sedimentation control plan guidance for the Project, and that will set the basis for the contractor's plan. BMPs will be implemented for stormwater management. Water resource areas, including floodplains, will be restored to preconstruction grades and vegetation. See Section AASI Application Checklist, 19 Environmental Impact Analysis and Appendix I for additional information.

Agricultural Conservation

- ***Preserve and protect the viability and character of high quality agricultural lands in the County.***

Criteria used for developing the Project location included minimizing impacts to agricultural uses. Property owners can continue to use the land within the easement area for purposes such as farming, grazing, or access, so long as such uses do not interfere with or endanger the operation of the Project. Agricultural use is compatible with operation of the Project because the water pipeline and fiber optic cable will be buried below the plow line.

Additional measures that will be implemented to minimize impacts to irrigated agricultural land include:

- Stripping and storing topsoil separately from excavated trench materials
- Seeding or leaving land fallow in accordance with the individual property owner's agreed-upon reclamation procedures following construction of the Project

Transportation Plan and Riverdale Road Corridor Plan

The Adams County Transportation Plan with included reference to the Riverdale Road Corridor Plan provides information on Adams County's goals and objectives for roadways within the Project corridor and specifically special objectives for the Riverdale Road corridor. Of the stated policies described in the Transportation plan and Riverdale Road Corridor Plan, the following are particularly applicable to the Project: minimizing new utilities within the Adams County road right-of-way; preservation of the current agricultural use along the Riverdale Road corridor while addressing future land use; preserving the rural character of Riverdale Road, providing for access control; and protection of the natural resources in the corridor. The following sections describe the Project approach to meeting these planning objectives.

The Project pipeline is located outside of Adams County right-of-way except for roadway crossings. With respect to the Riverdale Road Corridor Plan, the Project alternative alignment development and selection process criteria was established to address Adams County's planning objective to maintain the scenic characteristics of the Riverdale Road corridor, by lowering the ranking of those sections of the Project alignment located in the Riverdale Road corridor. The selected Project alignment avoids Riverdale Road except for one crossing of the road at 112th Avenue. No other section of the alignment encroaches on the

Riverdale Road right-of-way. From the 112th Avenue crossing toward the south, the Project alignment parallels Riverdale Road for approximately 700 feet, located east of the Riverdale Road right-o-way within an easement through existing farmed land.

The section of the Project that crosses current agricultural land has been developed such that there will no impacts to the current agricultural land use. The Project will also be compatible with future planned use as open space. These crossings of agricultural land occur from 112th Avenue to 104th Avenue. Much of this land is owned by Adams County and is leased for farming It is noted that the Project alignment was reviewed by Adams County property managers during the project design development process and that all comments by the Adams County land managers have been incorporated into the design.

With respect to preserving the rural character of the Riverdale Road corridor, Project impacts will be limited to the construction phase. The Project is mitigating construction related impacts with property owners and lessees in accordance with permanent and temporary easements. Following construction, areas disturbed by the Project will be restored to pre-construction conditions. Future project related impacts will be limited with periodic operation and maintenance access to the Project site.

The Riverdale Road Corridor Plan also seeks to limit access points off of Riverdale Road, and utilizing to existing driveways. During the operation and maintenance of the Project, access to the Project alignment will be required by Thornton from Adams County Roadways and Riverdale Road. Proposed points of access off of all Adams County roads are planned to utilize existing driveways as much as possible in accordance with County planning goals. Based on Project access needs and the location of existing driveways, there are limited number of additional proposed access points planned for the Project. Each of these proposed Project access points is identified in Appendix K for review by Adams County.

Description of impacts and Net Effect that the project would have on land use patterns.

The Project is not anticipated to affect land use patterns in Adams County. While the installation of the Project will create temporary impacts during construction, the water pipeline will be buried underground, and disturbed surfaces will be restored to pre-construction conditions. Land use within and adjacent to the Project Impact Area are agricultural, residential, public/quasi-public, and municipal areas of Thornton. Uses or access within the easement can continue after construction so long as such uses do not interfere with or endanger the operation of the Project. In additional, all water pipeline components within agricultural farmed lands will be buried a minimum of 5 feet below the ground surface, so as not to have any conflicts with farm plows. There are some water pipeline appurtenances such as access manholes, air and vacuum valve vaults, and some small diameter vent pipes that will have above grade components. These appurtenances will be located at the perimeter of farmed lands. In other areas they will be located with low profile features and will generally be painted with neutral colors.

Description of the Surrounding and/or impacted community(ies)

The proposed Project alignment generally follows Quebec Street between 168th Avenue and 120th Avenue in Thornton and Adams County. In general, the Project alignment in areas north of approximately 138th Avenue crosses a mix of residential development and undeveloped properties. The undeveloped property use varies between native grass pastures to actively farmed agricultural land. The portion of the alignment between 138th Avenue and 120th Avenue is through areas that have largely been developed into single family residences, commercial businesses, and shopping centers. There is a significant amount of active residential and commercial land development ongoing along sections of alignment. Refer to Appendix D Figure 1 for the water pipeline alignment in this area.

The proposed Project alignment from just east of the intersection of 120th Avenue and Niagara Street follows a path south to southwest to the Wes Brown Water Treatment Plant located southwest of the intersection of East 88th Avenue and Colorado Boulevard. The Project alignment is generally in open space, rights of way, and actively farmed agricultural property. Refer to Appendix D Figure 2 for the water pipeline alignment in this area.

Description of the surrounding and/or impacted Cultural Resources.

ERO Resources Corporation (ERO) conducted a file search for the Segment A impact area (1,549 acres) in Adams County with the Office of Archaeology and Historic Preservation (OAHP). The OAHP provided file search results on September 8, 2021 (File Search No. 24007), and ERO conducted a review of the OAHP's online Compass database for pipeline alignments on September 15, 2021. The OAHP records indicate less than 5 percent of the Segment A Impact Area has been previously surveyed and that the Segment A Impact Area intersects the boundaries of four previously documented cultural resources. Of the previously documented resources, one is a precontact Native American open camp, two are historical structures, and one is a historic building. All four previously documented resources are either destroyed or do not intersect the proposed work limits. No previously documented resources overlap unincorporated Adams County property.

Description

The OAHP records identified 16 previously conducted cultural resource surveys in the Segment A Impact Area (Natural and Cultural Resources Assessment, Appendix C, Table C-1, located in Appendix I). Four of the previous surveys do not have Geographic Information System (GIS) data. Most of the previously documented surveys were completed in relationship to utility and transportation development projects more than 10 years ago. Approximately 5 percent of the Segment A impact area has been previously surveyed; this overlaps about 2 percent of the work limits. Previous surveys overlap about 20 acres of unincorporated Adams County property within the Segment A impact area (Figure 8.01-8.04 in Appendix I).

The file search identified four previously documented cultural resources in the Segment A Impact Area (ERO Report, Appendix C, Table C-2, located in Appendix I). The previously documented resources include a precontact Native American open camp (5AM40; needs data) as well as a historical trail (5AM130, field not eligible), building (5AM265; officially delisted), and Rullo/Roullo Ditch segment (5AM1867.1; officially not eligible). The historical trail (5AM130), residence (5AM265), and ditch (5AM1867.1) are destroyed. The open camp is located outside of the work limits. Only the no longer extant Rullo/Roullo Ditch intersected the proposed work limits.

In addition to a file search with the OAHP, review of existing literature, including historical maps, tax assessor records, and the Colorado Water Conservation Board's Colorado Decision Support Systems was performed, to determine if unevaluated cultural resources are located in the Segment A Impact Area. This review identified properties in the Segment A Impact Area that may contain cultural resources 50 years old or older (i.e., constructed prior to 1970) (Natural and Cultural Resources Assessment, Appendix C, Table C-3), located in Appendix I). The majority of these resources are historical rural or agricultural properties and irrigation-related landscape features.

Impacts

The Segment A has little or no potential to result in any adverse effects on known sites, structures, or buildings that are currently considered historic properties (i.e., cultural resources that are eligible, needs data, or listed in the State or National Register of Historic Places). All four previously documented resources are either destroyed or do not intersect the proposed work limits. No previously documented resources overlap unincorporated Adams County property.

Compliance with Section 106 (54 United States Code [U.S.C.] § 306108) of the National Historic Preservation Act (54 U.S.C. § 300101 et seq.) or the Colorado State Historic Act (C.R.S. 24-80) is necessary only when state or federal permits, funding, or lands are involved. For instance, if a drainage, canal, or ditch is determined jurisdictional and the project requires a Clean Water Act (CWA) Section 404 permit the USACE may require a pedestrian survey and State Historic Preservation Officer consultation for the permitted area, associated construction limits, and potentially a 100-foot buffer. If a historical ditch or canal requires a CWA Section 404 permit the effects on the ditch would have to be assessed and consulted on through formal documentation. Open trench construction across a canal or ditch, however, would not necessarily result in an adverse effect, provided that the ditch is returned to preconstruction contours. The USACE has determined that additional survey as part of the Nationwide Permitting will not be required.

Additional information is provided in Appendix I – Natural and Cultural Resources Assessment.

Description of existing and unique agricultural land in the areas

Criteria used for developing the Project location included minimizing impacts to agricultural uses. Property owners can continue to use the land within the easement area for purposes such as farming, grazing, or access, so long as such uses do not interfere with or endanger the operation of the Project. Agricultural use is compatible with operation of the Project because the water pipeline and fiber optic cable will be buried below the plow line.

Additional measures that will be implemented to minimize impacts to irrigated agricultural land include:

- Stripping and storing topsoil separately from excavated trench material
- Seeding or leaving land fallow in accordance with the individual property owner's agreed-upon reclamation procedures following construction of the water pipeline

Aerial mapping presented in Figure 1 and Figure 2 in Appendix D illustrates the type of land use and infrastructure development on each parcel crossed by the Project as of mid-2019. The parcel identification information crossed by the Project are presented on Figure 5 and Figure 6 in Appendix D. Table 2 provides identification of associated land use for those parcels. Land use within and adjacent to the Project Impact Area are agricultural, residential, public/quasi-public, and municipal areas of Thornton. As defined by Adams County the Project Impact Area addressed in this report are those geographic areas, including the development area, within 500 feet of the Project. Parcels that are currently platted or planned for future residential development are described in Table 2.

Table 3 presents the soil units crossed by the Project that are defined as Prime Farmland (if irrigated) by the United States Department of Agricultural (USDA), Natural Resources Conservation Service. Prime farmland, as defined by the USDA, CFR 657, is land that has the best combination of physical and chemical characteristics for producing food, feed, forage, fiber, and oilseed crops, and is also available for these uses (the land could be cropland, pastureland, rangeland, forest land, or other land, but not urban built-up land or water). It has the soil quality, growing season, and moisture supply needed to economically produce sustained high yields of crops when treated and managed, including water management, according to acceptable farming methods. In general, prime farmlands have an adequate and dependable water supply from precipitation or irrigation, a favorable temperature and growing season, acceptable acidity or alkalinity, acceptable salt and sodium content, and few or no rocks. They are permeable to water and air. Prime farmlands are not excessively erodible or saturated with water for a long period of time, and they either do not flood frequently or are protected from flooding. No Unique Farmland, defined as being used for special crops per the USDA, is crossed by the Project.

Table 3. Prime Farmland Soils Crossed by the Project

Soil Unit Map Symbol	Soil Name	Prime Farmland Classification
NuA	Nunn clay loam, 0 to 1 percent slopes	Prime farmland, if irrigated
NuB	Nunn clay loam, 1 to 3 percent slopes	Prime farmland, if irrigated
PlB	Platner loam, 0 to 3 percent slopes	Prime farmland, if irrigated
PlC	Platner loam, 3 to 5 percent slopes	Prime farmland, if irrigated
UlC	Ulm loam, 3 to 5 percent slopes	Prime farmland, if irrigated

Source: https://websoilsurvey.sc.egov.usda.gov/App/WebSoilSurvey.aspx

A summary of unincorporated Adams County parcels identified with prime farmland type soils that are not developed with residential or commercial development that are crossed by the Project are presented below. Based on the current land uses on these properties and the associated lack of irrigation, a majority of the unincorporated Adams County parcels are not classified as Prime Farmland per USDA criteria.

The use of the property for agricultural purposes will not be impacted by the Project. Property owners can use the land within the easement area for purposes such as farming, grazing, or access, so long as such

uses do not interfere with or endanger the operation of the Project. Agricultural use is compatible with operation of the Project because the water pipeline and fiber optic cable will be buried below the plow line. Parcels Project alignment are listed below from north to south and correspond to the parcel map identification number on Figures 5 and 6 in Appendix D.

- **Parcel 1 –** Mixture of UIC, and PIB soil types; owned by ERN; land currently accommodates oil and gas facilities and grazing activities. Not irrigated and therefore not Prime Farmland.
- **Parcel 3 –** Mixture of UIC, PIB and PIC soil types; owned by Quebec 7; Property is platted for a residential subdivision. The Project is proposed to be located within the future planned Thornton Quebec Street right-of-way.
- **Parcel 9 –** Mixture of PIB and UIC soil types; owned by Clear Channel Broadcasting; land accommodates broadcasting antenna towers and a buried gas line; platted for future subdivision. Not irrigated and therefore not Prime Farmland.
- **Parcel 10 –** Mixture of PIB and UIC soil types; owned by Robin McIntosh; land contains nonnative upland vegetation and a prairie dog colony and does not appear to be used for agriculture. Not irrigated and therefore not Prime Farmland.
- **Parcel 11** – Mixture of NuB and UIC soil types; owned by Richard H. and Juanita M. Larson; land is used for agriculture. Irrigated and therefore Prime Farmland.
- **Parcel 12** – Mixture of NuA and NuB soil types; owned by Adams County Board of County Commissioners; Land is used for agriculture. Irrigated and therefor Prime Farmland.
- **Parcel 13** – Mixture of NuA and NuB soil types; owned by Adams County Parks; land is used for agriculture. Irrigated and therefore Prime Farmland.
- **Parcel 14** – Mixture of NuA and NuB soil types; owned by Adams County; land is used for agriculture. Irrigated and therefore Prime Farmland.
- **Parcel 15 –** Mixture of NuB and NuA soil types; owned by Mike Leon; land is used for agriculture. Irrigated and therefore Prime Farmland.
- **Parcel 16, 17, and 19 –** Mixture of NuA and NuB soil types, and non-Prime Farmland soil types; owned by Public Service Company of Colorado; land accommodates a transmission tower and land is used for open space. Not irrigated and therefore not Prime Farmland.

18 Local Government Services

Adams County waived the submittal requirements under this topic per a March 17, 2021 email from Layla Bajelan, Adams County, included in Appendix A.

Description of existing capacity of and demand for local government services including roads, schools, water and wastewater treatment, water supply, emergency services, transportation, infrastructure, housing, law enforcement, and other services necessary to accommodate Development.

Description of the impacts and Net Effect of the Project on the demand for local government services and the capability of local governments to provide services.

Description of the potential effect on the existing transportation network including, but not limited to: road hierarchy, circulation system, road connections, right-of-way dedications, conformance with Adams County engineering standards, road access, alignment of roads, intersections, sidewalks and trails, pedestrian access, parks and open space.

19 Financial Burden on County Residents

The following Thornton variance request and Adams County response is documented in an Adams County Memorandum, dated April 22, 2021, from Layla Bajelan, included in Appendix A.

Thornton requested a variance as follows:

Thornton requests that Adams County waive this submittal requirement. The TWP will not impact the tax burden or fee structure for any government services except municipal water supply, and then only for those water customers that are within the service area of Thornton's water utility (primarily within the city limits of Thornton). Adams County residents that are located within Thornton's water utility's service area and that receive water service from Thornton are subject to rates and fees established by the Thornton City Council.

Adams County response:

Adams County will waive this requirement, as the only residents that will be financially impacted by this project are within the City of Thornton water utility service area and are already subject to the fees and rates of the Council. The pipeline itself will not impact taxes or rates on citizen in unincorporated areas.

Description of the existing tax burden and fee structure for local government services, including but not limited to assessed valuation, mill levy, rates for water and wastewater treatment, and costs of water supply.

Description of impacts and Net Effect of the Project on existing tax burden and fee structure for government services applicable to County residents and property owners.

20 Local Economy

Adams County waived the submittal requirements under this topic per a March 17, 2021 email from Layla Bajelan, Adams County, included in Appendix A.

Description of the local economy including but not limited to revenues generated by the different economic sectors, and the value or productivity of different lands.

Description of impacts and Net Effect of the Project on the local economy and opportunities for economic diversification, including the number and types of jobs created.

Description of jobs created as a result of the Project.

Description of income potential from jobs created by or as a result of the Proposed Project.

21 Recreational Opportunity

Adams County waived the submittal requirements under this topic per a March 17, 2021 email from Layla Bajelan, Adams County, included in Appendix A.

Description of present and potential recreational uses, including the number of recreational visitor days for different recreational uses and the revenue generated by types of recreational uses.

Map depicting the location of recreational uses such as fishery stream segments, access points to recreational resources, and hiking and biking trails.

Description of the impacts and Net Effect of the Project on present and potential recreational opportunities and revenues to the local economy derived from those uses.

22 Environmental Impact Analysis

The Project is a low-impact, passive use that is consistent with existing and planned land uses. The Project is not anticipated to impact the environment once the water pipeline is installed. Effects on the environment will be temporary during construction and are anticipated to be negligible after construction.

A detailed environmental assessment is included in the Natural and Cultural Resources Assessment – Segment A Adams County, Colorado (ERO Resources, 2021) in Appendix I.

The following sub-sections of the Environmental Impact Analysis Checklist topics are presented at the summary heading level, followed by Thornton's response.

Air Quality

Description of the air sheds to be affected by the Project, including the seasonal pattern of air circulation and microclimates.

Impacts to air quality are expected to be negligible.

Map and description of the ambient air quality and State air quality standards of the air sheds to be affected by the Project, including particulate matter and aerosols, oxides, hydrocarbons, oxidants and other chemicals, temperature effects and atmospheric interactions.

Impacts to air quality are expected to be negligible.

Descriptions of the impacts and net effect that the Project would have on air quality during both construction and operation under both average and worst-case conditions.

The Project would create temporary impacts during construction from ground disturbing activities and emissions from vehicles and equipment. Construction of the Project is anticipated to last for 20 months from June 2022 to February 2024.

An air permit is required for construction projects that are greater than 25 acres and/or extend longer than 6 months duration from the Colorado Department of Public Health and Environment (CDPHE) Air Pollution Control Division. Project contractors will submit an Air Pollutant Emissions Notice (APEN) and will obtain a permit from CDPHE before construction activities in accordance with state air quality regulations. The Project construction contractor will implement standard industry BMP for dust abatement and abide by required permit conditions issued by the CDPHE Air Pollution Control Division.

Construction activities, such as vehicles driven over cleared ground, general disturbance to vegetated areas, or soil stockpiles susceptible to winds, can cause fugitive dust. During construction, dust control measures will be implemented. Examples of these mitigation measures that may be used on the Project include:

- Speed limits for construction vehicles within the work area.
- Water application to disturbed areas, dirt access roads, and stockpiles.
- Erosion control techniques and BMP.
- Revegetation of disturbed areas where appropriate following construction activities.

Water will be used as needed for dust suppression during construction. Water sources could be nearby fire hydrants, water pipelines, and water trucks. Water may be purchased from local water providers for construction activities. Due to the temporary nature of the impacts and because they will be mitigated by implementing BMP and permit requirements, it is not anticipated that the Project will further degrade or create a negative net effect to air quality conditions in Adams County.

There will be no impact to air quality after construction.

Visual Quality

Map and description of ground cover and vegetation, tree canopies, waterfalls and streams or other natural features.

Description of view sheds, scenic vistas, unique landscapes or land formations.

Map and description of buildings, structure design and materials to be used for the Project. Include elevations of proposed buildings and other structures.

Descriptions of the impacts and Net Effect that the Project would have on visual quality.

The following Thornton variance request and Adams County response is documented in an Adams County Memorandum, dated April 22, 2021, from Layla Bajelan, included in Appendix A.

Thornton requested a variance as follows:

> Thornton requests that Adams County waive this submittal requirement. The pipeline will be buried, and visual impacts during construction will be temporary.

Adams County response:

> Adams County will require the applicant to demonstrate that the visual impacts of the Project construction will be addressed during construction of the pipeline.

Temporary visual impacts that may occur during construction include fugitive dust, construction debris, and tracking of debris and mud on streets; evidence of construction process including staging of pipeline, and structures, earthwork and import material stockpiles, construction equipment and construction vehicle parking. The construction contractor will be required to control fugitive dust from the construction site primarily through the use of water spray when conditions are dry and in accordance with permit requirements. The construction contractor will be required to use and maintain vehicle tracking pads to mitigate tracking mud on public streets in accordance with permit requirements. Thornton will have oversight representatives on site to monitor that mitigation measures are in place to control construction-related visual impacts. Other mitigation measures include the following:

- Construction and silt fencing will be utilized to minimize disturbance to surrounding areas.
- Existing trees and vegetation will be preserved to the extent practicable.
- Disturbed areas will be revegetated using native species as soon as practicable following construction.
- Long term staging and storage of materials in areas approved by Thornton.

Visual impacts of the completed Project will be negligible, as the water pipeline will be buried underground and any above grade appurtenances, such as, vent pipes and electrical equipment cabinets will be low profile and/or painted with colors to match the adjacent environment. Details of these facilities are included in the Project plans (Appendix E). Upon completion of construction, areas impacted by construction will be restored to pre-construction conditions with native seeding and sod, as applicable.

Surface Water Quality

Map and description of all surface waters, including applicable State water quality standards, to be affected by the project.

Map and descriptions of surface waters within the Project Impact Area are included in Appendix I.

Descriptions of the immediate and long-term impact and Net Effects that the Project would have on the quantity and quality of surface water under both average and worst case conditions.

The Project will have no impact on the quantity of surface water. In general, following construction, historic flow patterns will be maintained, and the land will drain in the same manner and at generally the same rate as it did before construction.

Impacts on surface water are not anticipated after construction.

Construction Stormwater General Permits from CDPHE and Adams County Stormwater Quality and Clearing and Grading Permits will be required for the Project and will include requirements for control of stormwater runoff and groundwater discharged into drains or waterways from construction areas and activities. The construction contractor will obtain required permits and will implement a Stormwater Management Plan for their planned work activities in accordance with CDPHE and the Municipal Separate

Storm Sewer System (MS4) requirements associated with Adams County and Thornton. Project plans and specifications will contain erosion and sedimentation control plan guidance for the Project, and that will set the basis for the contractor's plan.

BMP will be implemented for stormwater management. Surface drainage stormwater BMPs will include application of erosion control techniques and the successful revegetation of disturbed areas that will be used to protect surface hydrology and water quality. Excavated material or other construction materials will not be stockpiled or deposited near or on stream banks or other watercourse perimeters where they could be washed away by high water or storm runoff, or could encroach upon stream banks.

Construction wastewater associated with the potential dewatering of trenches will be handled in accordance with CDPHE permit discharge requirements. Before construction, Thornton and/or the Project contractors will obtain a General Permit for Construction Dewatering Activities from CDPHE and specify the management measures to capture and manage any generated discharge. BMPs will also be deployed for construction dewatering activities, pursuant to the Construction Stormwater Discharge Permit and/or the Construction Dewatering Discharge Permit as appropriate for the site conditions and soil erodibility, to protect the quality of surface water during construction of the Project.

The Project water pipeline will be hydrostatically tested prior to operation start up. Before discharge of hydrostatic test water from the water pipeline, Thornton and/or the Project contractor will obtain a General Permit for Discharges from Hydrostatic Testing of Pipelines, Tanks, and Similar Vessels from CDPHE. Sampling and effluent limits will be in accordance with permit requirements.

With the implementation of BMPs and other measures required to meet applicable permit requirements, the Project will have negligible impacts on surface water during construction.

Descriptions of the immediate and long-term impacts and Net Effects that the project would have on the meandering characteristics and limits of the streambed under both average and worst case conditions.

Temporary impacts as a result of implementing open cut construction methods across drainages and streams will occur during construction. Temporary diversion of stream flows around the water pipeline location will be required to accommodate construction for water crossings; however, stream flows will be maintained. This work would be accomplished under a USACE Nationwide Permit. Grades will be returned to preconstruction contours and in general, following construction, historic flow patterns will be maintained, and the land will drain in the same manner and at generally the same rate as it did before construction. Work will be scheduled to avoid high streamflows.

Long-term impacts on the meandering characteristics and limits of the streambed are not anticipated after construction.

Groundwater Quality and Quantity

Map and description of all groundwater, including any and all aquifers that are affected by the Proposed Project.

Impacts to groundwater will be mitigated and affects to aquifers are not anticipated. Temporary construction activities and dewatering in areas of streams and shallow alluvial aquifers may have a localized effect during construction; however, the Project is unlikely to have any long-term adverse effects on aquifer recharge areas.

The geotechnical investigation program for the water pipeline design included soil borings located along the water pipeline at an approximate spacing of 500 feet and also at each end of the proposed tunnel locations. The presence of groundwater and groundwater depth was noted on the drilling logs at the time of the geotechnical drilling investigation. Piezometers were installed at most tunnel boring sites to monitor groundwater levels a few days after the drilling and periodically thereafter.

Groundwater was encountered while drilling in 9 of the 25 open-cut borings at depths ranging from 4 to 14 feet below the ground surface. (Kumar, 2021). Fluctuations in the groundwater levels may occur due to

variations in the water level of nearby drainages, precipitation, seasonal moisture variations, temperature, changes in type of land development, and other factors not evident at the time that groundwater measurements were taken.

Mitigation measures that will be implemented to minimize impacts to groundwater include the following:

- The water pipeline design includes installation of low permeability cut-off walls at approximately 1,000 foot spacing to reduce movement of groundwater along the water pipeline.
- Compacting backfill material and soil disturbed during trenching. Compact with a backhoe, vibration machine, rollers, or other equipment. Compaction requirements and testing would be specified in accordance with standards of practice.

Wetlands and Riparian Areas

Map and description of all floodplains, wetlands, and riparian areas to be affected by the project, including a description of each type of wetlands, species composition, and biomass.

The Project crosses four designated 100-year floodplains in unincorporated Adams County based on Federal Emergency Management Agency (FEMA) Flood Insurance Rate Map (FIRM) Panels for Adams County, Colorado and Incorporated Areas. These areas include:

- Brantner Gulch, Plan Station 308+49 to 312+70, FIRM Panel 08001CO317H
- Direct Flow Area 0054-1, Plan Station 578+40 to 585+26, FIRM Panel 08001CO318J
- Direct Flow Area 0054-1, Plan Station 587+90 to 596+15, FIRM Panel 08001CO318J
- Grange Hall Creek, Plan Station 612+00625+40, FIRM Panel 08001CO318J

Floodplain crossings in unincorporated Adams County are shown on the plans in Appendix E.

Twenty two (22) potential waters of the United States (10 wetlands, 5 open water areas and 7 ditches and canals) were mapped in the Project Impact Area. A total of about 7.02 acres of potential wetlands and 19.05 acres of potential other waters of the United States (16.28 acres of open water areas and 2.77 acres of ditches and canals) were mapped inside the Project Impact Area, including within the work limits. Typically, the Project will require a 50-foot permanent easement for the water pipeline and an additional 40-foot temporary easement for construction. Work limits include the permanent easement and temporary construction easement. Exclusively inside the work limits in unincorporated Adams County, about 0.34 acre of potential wetlands and 0.09 acre of potential other waters of the United States (0.01 acre of open water areas and 0.08 acre of ditches and canals) were mapped. The potential waters of the United States include wetlands, intermittent streams, depressional areas, ponds, reservoirs, and ditches. Project impacts to jurisdictional waters of the U.S. will be controlled based on USACE Nationwide Permit requirements and/or will not be impacted by the Project if avoided by using tunneling methods to construct the water pipeline. Refer to Appendix I for additional details and maps.

Description of the source of water interacting with the surface systems to create each wetland (i.e., side-slope runoff, over-bank flooding, groundwater seepage, etc.).

Appendix I includes information on the source water interacting with surface systems to create each wetland.

Description of the impacts and Net Effect that the Project would have on the floodplains, delineated flood hazard zone(s), wetlands and riparian areas.

Impacts to flood hazard zones, wetlands, and riparian areas are negligible and are temporary during construction. Disturbed areas will be restored to pre-construction grades and revegetated where appropriate after construction. BMPs will be implemented to protect surrounding areas from stormwater runoff and erosion. Information and maps on wetlands and riparian areas are found in Appendix I.

The Project crosses four designated 100-year floodplains in unincorporated Adams County as shown on drawings in Appendix E.

The Project will not alter floodplains. The water pipeline will be buried a minimum depth of 5 feet below grade. Work conducted within the floodplain areas will be restored to pre-construction conditions and grades. Therefore, the Project will mitigate impacts on the hydraulics and hydrology of the floodplain. Thornton will obtain Floodplain Development permits and other approvals as required for floodplain crossings from Adams County or other agency as required after design has progressed. Information will be provided to Adams County as required to obtain permits.

Floodplain crossings will utilize open-cut construction in the floodplain. Spoils from trench excavations, construction-related equipment, materials, and supplies will be stored outside of the 100-year floodplain per local floodplain regulations. Floodplain areas using open-cut construction will be restored to pre-construction grades and vegetation after construction.

Terrestrial and Aquatic Animals and Habitat

Map and description of terrestrial and aquatic animals including the status and relative importance of game and non-game wildlife, livestock and other animals.

The Project Impact Area does not contain habitat for any federally listed threatened, endangered, or candidate species. Suitable habitat is present for several state listed species including common garter snake, black-tailed prairie dog, bald eagle, burrowing owl, and ferruginous hawk. Three raptor nests have been identified within or near the Project Impact Area, and the Project Impact Area contains habitat for a variety of migratory birds. Mule deer, white-tailed deer, wild turkey, and Canada geese also are likely to occur within the Project Impact Area. See Appendix I for additional details and maps. The ERN parcel, shown as Parcel 1 on Figure 5 in Appendix D, located east of Quebec Street between 168th Avenue and 160th Avenue is currently used for grazing.

A description of stream flows and lake levels needed to protect the aquatic environment.

The Project will not impact lake levels. Temporary impacts as a result of implementing open cut construction methods across drainages and streams will occur during construction. Temporary diversion of stream flows around the water pipeline location will be required to accommodate construction for water crossings; however, stream flows will be maintained. This work would be accomplished under a USACE Nationwide Permit. Grades would be returned to preconstruction contours and in general, following construction, historic flow patterns will be maintained, and the land will drain in the same manner and at generally the same rate as it did before construction.

Description of threatened or endangered animal species and their habitat.

The Project Impact Area does not contain habitat for any federally listed threatened, endangered, or candidate species. Suitable habitat is present for several state listed species including common garter snake, black-tailed prairie dog, bald eagle, burrowing owl, and ferruginous hawk. See Appendix I for additional details and maps.

Map and description of critical wildlife habitat and livestock range to be affected by the project including migration routes, calving areas, summer and winter range, and spawning beds.

Map and description of wildlife habitat is included in Appendix I.

The only parcel currently used for livestock grazing is Parcel 1, shown on Figure 5 in Appendix D. The Project easements across this parcel will address livestock grazing requirements with temporary fencing in accordance with easement terms.

Description of the impacts and Net Effect that the Project would have on terrestrial and aquatic animals, habitat and food chain.

No suitable habitat exists in the Project Impact Area for any federally listed threatened, endangered, or candidate wildlife species. The Project will have no impact or net effect on those species. Suitable habitat exists for several state listed species and a site assessment will be conducted just prior to construction. CPW guidelines will be followed during construction to minimize impacts. Impacts to other wildlife will be minimal during construction. All temporarily disturbed areas would be returned to preconstruction grades and seeded with native vegetation, or as reasonably specified by the property owner, once construction is complete. Long-term impacts to wildlife are not anticipated. See Appendix I for additional information.

Terrestrial and Aquatic Plant Life

Map and description of terrestrial and aquatic plant life including the type and density, and threatened or endangered plant species and habitat.

Six broad vegetation communities were identified in the Project Impact Area. These vegetation communities include mixed upland, nonnative upland, riparian, wetlands, agricultural lands, and developed/disturbed areas.

No federally listed plant species are likely to be present in the Project Impact Area. Colorado has no state statute protecting rare plants, and therefore no list of state threatened and endangered plant species. Potentially suitable habitat for the Colorado butterfly plant, a species listed by the Colorado Natural Heritage Program as rare or imperiled, is present in the Project Impact Area, but Project construction is unlikely to have an adverse effect on the species. the Project does not cross any designated critical habitat for the Colorado butterfly plant. See Appendix I for additional details and maps.

Descriptions of the impacts and Net Effect that the Project would have on terrestrial and aquatic plant life.

All temporarily disturbed areas would be returned to preconstruction grades and seeded with native vegetation, or as reasonably specified by the property owner, once construction is complete. Certified weed-free seed mix consisting of drought-tolerant native grasses and other types of vegetation as appropriate to meet property owner's reasonable preferences will be implemented for the revegetation of disturbed areas. BMPs will be implemented during construction to minimize impacts. These BMPs could include installing temporary fencing to deter access to sensitive areas, placing staging areas in previously disturbed upland areas, and installing sediment- and erosion-control devices to minimize surface runoff in disturbed areas. Because most of the impacts on vegetation would be temporary, there would be no long-term adverse effects on vegetation.

Noxious weeds within the Project work limits will be controlled using the Integrated Pest Management methods as described by the Colorado Department of Agriculture. Those methods have been developed to control noxious weeds in a manner that prevents harm to human health and to environmentally sensitive areas such as waterways and desirable vegetation including native trees.

Site Geologic Conditions and Natural Hazards

Map and description of soil, geologic conditions, and Natural Hazards including but not limited to soil types, drainage areas, slopes, avalanche areas, debris fans, mud flows, rockslide areas, faults and fissures, seismic history, and wildfire hazard areas.

A desktop study was conducted of the geologic conditions and natural hazards that may be present along the Project alignment. The desktop study included review of soil, geologic conditions, and natural hazards including soil types (collapsible and potentially swelling/expansive soils), drainage areas, slopes, avalanche areas, debris fans, mud flows, rockslide areas, faults and fissures, seismic history, and wildfire hazard areas.

The proposed Project alignment generally follows Quebec Street between East 168th Avenue and East 156th Avenue in Thornton and Adams County, Colorado. In general, the Project alignment in areas north of approximately East 138th Avenue is in undeveloped properties that vary between native grass pastures to

actively farmed agricultural land. Existing ground surface grades along the alignment are generally gently to moderately sloping with elevations generally ranging between approximately 5,080 and 5,296 feet (as provided by the Google Earth software package).

The Project alignment beginning near the intersection of East 120th Avenue and Niagara Street follows a path south to southwest to the Wes Brown Water Treatment Plant located southwest of the intersection of East 88th Avenue and Colorado Boulevard. The Project alignment is generally in open space, rights of way, and actively farmed agricultural property. The Project will cross several roadways and drainages along this reach of the alignment. Existing ground surface grades along the Project alignment are generally gently to moderately sloping with elevations generally ranging between approximately 5060 and 5170 feet (as provided by the Google Earth software package) (Kumar, 2021).

Natural hazards identified through the desktop study along the Project alignment include collapsible and expansive (swelling) soils and bedrock and drainage areas. Based upon the review of available published geologic data, natural hazards due to steep unstable slopes, avalanche, debris fans, mud flows, rockslide, faults and fissures, seismicity, and wildfire hazard are deemed unlikely along the water Project alignment.

The Project alignment was overlain on a surficial geology map using the geology published on the *Generalized Surficial Geologic Map of the Denver Area, Colorado* (Chase and McConaghy, 1972) and is included in Appendix J. Geology along the Project alignment consists primarily of loess, eolian sand, colluvium, sand silt, gravel, clay alluvium, sandstone, claystone, and siltstone bedrock.

Collapsible soils are defined as any unsaturated soil that goes through radical rearrangement of particles and greatly decreases in volume upon wetting, additional loading, or both. Soils with collapse potential are typically eolian, loessial, subaerial, colluvial, mudflow, and alluvial derived. Appendix J includes a figure illustrating where collapsible soils are mapped by the CGS, as shown by the yellow shaded areas labeled “Eolian (wind-blown) deposits”. The CGS map identifies eolian (windblown) deposits in portions of the Project alignment primarily from East 168th Avenue to East 120th Avenue that could have the potential for collapse. (Kumar, 2021; Lithos, 2021).

Expansive soils and rock contain a high percentage of certain kinds of clay particles that are capable of absorbing large quantities of water. Soil volume may expand 10 percent or more as the clay becomes wet. The powerful force of expansion is capable of exerting pressures of 20,000 pounds per square foot or greater on foundations, slabs, or other confining structures. Subsurface expansive soils in Colorado tend to remain at a constant moisture content in their natural state and are usually relatively dry at the outset of the disturbance that construction causes on them. Exposure to natural or human-sourced water during or after construction results in expansion. In many instances, the soils do not regain their original dryness after construction but remain somewhat moist and expanded due to the changed environment. This pushing apart, or expansion, occurs throughout the mass of soil that is being wetted and causes increased volume and significant expansive pressures within the mass. The opposite effect, called shrinkage, may occur if a previously wet expansive clay is dried. Although no large positive pressures are exerted, shrinkage will cause a volume decrease of the soil mass. These processes of expansion and shrinkage may occur any number of times for a single soil mass. Appendix J includes a figure illustrating where potentially swelling soils and rock are mapped by the CGS. The potential for swelling soils and rock along the Project alignment varies from moderate to very high, primarily from East 168th Avenue to East 120th Avenue. The majority of the Project alignment from East 120th Avenue south to East 88th Avenue is mapped as low swell potential.

As part of the Project design, a geotechnical investigation was conducted along the pipeline alignment to identify and evaluate existing soils. The geotechnical investigation included geotechnical soil borings to a depth of 15 feet (approximately 5 feet below the bottom of the pipe), located at approximately 500 foot intervals along the proposed Project alignment. In addition, at proposed sites for pipeline tunnel installation, additional geotechnical investigation borings were conducted at each end of the proposed tunnel to a depth of approximately 35 feet, or deeper depending on the depth of the tunnel and findings in the field at the time of the geotechnical investigation. The findings from the geotechnical investigation and laboratory analysis, and engineering evaluation and recommendations are described in geotechnical design reports prepared for the Project by Kumar and Associates and Lithos Engineering (Kumar, 2021; Lithos, 2021). The design

recommendations for the pipeline, open-cut trench and tunnel excavation, over excavation, pipeline bedding, trench backfill, and trench stabilization are incorporated into the Project design plans and specifications.

The Project alignment crosses several drainage and potential wetland areas, as identified in Appendix I. The groundwater is likely shallow in these areas. (Lithos, 2021).

Descriptions of the risks to the Project from Natural Hazards.

Natural hazards identified through the desktop study along the Project alignment include collapsible and expansive (swelling) soils and bedrock and drainage areas. Based upon the review of available published geologic data, natural hazards due to steep unstable slopes, avalanche, debris fans, mud flows, rockslide, faults and fissures, seismicity, and wildfire hazard are deemed unlikely along the Project alignment.

Design requirements for the Project will be addressed based on findings of the geotechnical investigation conducted along the alignment and recommendations contained in the Project engineering geotechnical design reports. Mitigation measures will be implemented to protect the Project from natural hazards. Mitigation measures will be further refined during design to meet site-specific geological hazards.

Descriptions of the impact and net effect of the project on soil and geologic conditions in the area, and their effects on streambed meander limits and aquifer recharge areas.

Impacts on soil will be temporary during construction. BMPs implemented during construction will include application of erosion control techniques and the successful revegetation of disturbed areas. BMPs will be maintained and inspected. Failed BMPs will be replaced as required. After work is complete and final stabilization has been achieved, temporary BMPs will be removed. In areas with sandy soils and increased sloughing, potential mitigation measures may include, but are not limited to, the following:

- Revegetation
- Soil erosion blankets during construction

The Project is unlikely to have an adverse effect on the soil and geologic conditions in the area. Temporary construction activities and dewatering in areas of streams and shallow alluvial aquifers may have a localized effect during construction; however, the Project is unlikely to have any long-term adverse effects on streambed meander limits and aquifer recharge areas. Areas disturbed for construction of the Project will be restored to pre-construction grades and revegetated to pre-construction vegetation where appropriate after construction.

Nuisances

Descriptions and maps showing the range of noise, glare, dust, fumes, vibration, and odor levels caused by the Project, along with an indication of their significance.

After construction is complete, there are no anticipated nuisances caused by the Project. During the construction phase there will be unavoidable minor nuisances that are typical for construction projects. These nuisances will be short-term in nature. Thornton intends to mitigate these construction-related disturbances through the use of BMPs, in accordance with permits and federal, state, and local regulations.

Installation of the Project will create temporary noise impacts during construction. Noise impacts are anticipated to be minor in the context of the urbanized corridor where Project installation would occur. During the construction of the Project, contractors will be required to comply with Adams County's then-existing maximum permissible noise levels. After construction is complete, no noises related to the Project operation are anticipated in unincorporated Adams County.

There is no anticipated glare nuisance caused by the Project.

An air permit from the CDPHE Air Pollution Control Division is required for construction projects that are greater than 25 acres and/or extend longer than 6 months duration. Project construction contractors will submit an APEN and will obtain a permit from CDPHE before construction activities in accordance with state air quality regulations. Project construction contractors will implement standard industry BMP for dust

abatement and abide by required permit conditions issued by the CDPHE Air Pollution Control Division. After construction is complete, no air emissions related to the Project operation are anticipated in unincorporated Adams County.

Construction equipment and operations may cause vibration within the vicinity of the work limits during construction. Vibration from the majority of the equipment anticipated to be used during construction is well below the Federal Transit Administration identified maximum vibration level guidelines for preventing damage to non-historical structures from construction activities. Contractors will be required to initiate, maintain, and supervise safety precautions and programs associated with their work, which will include using proper and safe equipment to complete the work. Contractors will be required to take necessary precautions for safety and provide necessary protection to prevent damage, injury, or loss. After construction is complete, there is no anticipated vibration nuisance caused by the Project.

There is no anticipated odor nuisance caused by the Project.

Areas of Paleontological Historic or Archaeologic Importance

Map and description of all sites of paleontological, historic or archaeological interest.

Description of the impacts and Net Effect of the Project on sites of paleontological, historic or archaeological interest.

Thornton and ERO consulted with Paleo Solutions, Inc. (Paleo Solutions) regarding the potential impact of the Project on areas of paleontological importance. Paleo Solutions collected and evaluated existing paleontological data for the Project Impact Area. Existing paleontological data analyzed in the assessment are compiled from geologic maps, the Bureau of Land Management's (BLM) Potential Fossil Yield Classification (PFYC) (BLM, 2008; 2016) of the geologic units underlying the Project Impact Area (Murphey et al., 2015), published and unpublished literature, and the results of museum records searches. The evaluation assessed the paleontological importance of the geologic units within the Project Impact Area by researching their known fossil potential and paleontological significance and identified the number and significance of previously recorded fossil localities in the same geologic units within the Project Impact Area and elsewhere.

Based on published geologic mapping (Trimble and Machette, 1979), the Project Impact Area is underlain by five surficial sedimentary deposits: Post-Piney Creek and Piney Creek Alluvium, colluvium, loess, Louviers Alluvium, and Slocum Alluvium; and one sedimentary bedrock geologic unit, the Denver Formation which is synonymized with the Dawson and Arapahoe Formations (undivided). The Denver Formation is Upper Cretaceous to Lower Paleocene in age and has very high paleontological potential (PFYC 5). Loess, Louviers Alluvium, and Slocum Alluvium are Pleistocene in age, and have moderate paleontological potential (PFYC 3). Post-Piney Creek and Piney Creek Alluvium and Colluvium are Holocene in age and have low paleontological potential (PFYC 2).

According to the Denver Museum of Nature and Science there are nine fossil localities within the same Townships and geologic units as the Project Impact Area. The University of Colorado Museum (UCM) has no records of fossil localities within the same geologic units and Townships as the Segment A Impact Area (UCM, 2021). The OAHP Compass database records two fossil localities within 0.5 mile of the Segment A Impact Area (OAHP, 2021). The Paleobiology Database (PBDB 2021) has 14 occurrences from the Denver Formation and four occurrences from the Arapahoe Formation within Adams County consisting of vertebrates including dinosaurs and turtles. For the full taxonomic list of fossils from the PBDB in Adams County, refer to PBDB.org.

To facilitate the identification of scientifically significant paleontological resources that might be encountered during Project construction, a qualified paleontologist will monitor construction within 200 yards of any previously recorded fossil locality where Denver Formation bedrock is expected to be encountered during open trench construction in unincorporated Adams County. Areas in which Denver Formation bedrock is expected to be encountered would be determined prior to construction by evaluation of geotechnical reports prepared for design of the Project, and areas that require paleontological monitoring will be included in the Project construction documents.

The location of previously recorded, scientifically significant fossil localities is known to Thornton's paleontological consultant, but not published in this report in an effort to preserve the resource and in accordance with best practices and standard operating procedures.

Thornton will have the Project contractor complete a pre-construction training provided by the paleontologist prior to Project construction on how to identify important paleontological resources if encountered during open trench construction in unincorporated Adams County, and appropriate steps to take to preserve and collect the resource.

If any subsurface bones or other potentially significant paleontological resource is unearthed in an area of unincorporated Adams County that is not monitored by the paleontologist, Thornton will consult with the paleontologist to evaluate its significance and determine the appropriate steps to take to preserve and collect the resource and associated data.

With these mitigation measures, the Project will not significantly degrade areas of paleontological importance.

Hazardous Materials Description

Description of all hazardous, toxic, and explosive substances to be used, stored, transported, disturbed or produced in connection with the Project, including the type and amount of such substances, their location, and the practices and procedures to be implemented to avoid accidental release and exposure, and any foreseeable impacts to the environment of such substances.

Hazardous, toxic, and explosive substances are not anticipated to be used, stored, transported, disturbed or produced after Project construction.

Construction, operation, and maintenance activities involving Thornton or the Project contractors bringing any hazardous materials onto the site will comply with applicable federal, state, and local laws and regulations regarding the handling, storage, disposal, transportation, and use of hazardous substances. In its contract with the Project contractors, Thornton will require that the Project contractors comply with applicable laws.

The Project includes the installation of a buried steel water pipeline, associated water pipeline appurtenances including precast vaults to house pipeline control valves. The water pipeline will be installed with open-cut trench-type construction and some tunneled installations. Hazardous, toxic and explosive substances anticipated to be used, stored, and transported include typical general infrastructure construction materials including: fuels, lubricants, and hydraulic fluids to power and operate construction equipment and tools; cast-in-place concrete-related materials such as form release agents and concrete curing compound; pipe tunneling drillings fluids; paints and solvents to paint miscellaneous water pipeline appurtenances. There are no foreseeable impacts to the environment from the substances used for the construction of the Project.

Hazardous Materials Site Investigation

With respect to hazardous materials contamination that may be existing along the Segment A alignment, site investigations within the Segment A Impact Area were conducted. An environmental records review (ERR) of the proposed Segment A Impact Area identified several oil and gas wells and/or operations AOC for potential soil and/or groundwater contamination. Because contaminated soils and/or groundwater were identified within the Project Impact Area and the associated concerns with worker health and safety, construction materials handling, liability, and scheduling implications on pipeline construction, further investigation was warranted on several of the AOC. A report presenting the results of the site investigations is included in Appendix L. This report presents the rationale for the investigation, the methods and procedures used to investigate, sample, and collect data for each area, and the evaluation of the data with respect to Project construction. Each AOC is discussed individually in the report. In total, four AOCs are within the Project Impact Area and were investigated between May through July 2021. Refer to Appendix L.

Location of storage areas designated for equipment, fuel, lubricants, chemical and waste storage with an explanation of spill containment measures.

Construction equipment will be used daily and stored on site overnight within the work limits during construction. The location of equipment will vary based on active construction location. No equipment will be stored after construction activities are complete.

If possible, fueling requirements will be met before arrival at the construction site. Heavy equipment left on site for construction activities will require onsite fueling at staging areas or the construction site. No bulk fuel storage is anticipated to occur on site. Fueling vehicles will be equipped with spill kits and fire extinguishers, and personnel will be properly trained in spill prevention, control, and countermeasures.

To minimize the potential for a spill during fuel transfers and be prepared in the event of a spill, the following measures, as provided in the Code of Colorado Regulations (CCR) and Code of Federal Regulations (CFR), will be followed during loading/unloading of fuel:

- Keep fire away while loading/unloading. Persons in the vicinity are forbidden to smoke, light matches, or carry any flame or lighted cigar, pipe, or cigarette. 49CFR 177.834(c, d).
- Fuel will not be loaded/unloaded from any motor vehicle while the engine is running. The exception is when the engine of the vehicle is to be used in the operation of the pump. 49CFR 177.837(a).
- The fuel tank records will be reviewed to determine the theoretical fuel tank level. 7CCR 1101-14 S2-3-1 and S2-4-2(a)(2.)
- The fuel tank level gauge will be inspected to determine the actual fuel tank level before unloading takes place. (Note: Any fuel tank level discrepancies will be resolved before hooking up to the fuel tank.) 7CCR 1101-14 S2-3-1 & S2-4-2(a)(2).
- The supply truck driver will observe the transfer during the entire operation. 49CFR 177.834(i)(2).
- Once the truck is in position, its emergency brake will be applied, and reasonable precautions will be taken to prevent motion of the truck during unloading (example: utilize wheel chocks when parked on an incline). 49CFR 177.834(e).
- Signs must be posted that remind drivers not to pull away before detaching hoses. 40CFR 112.7(h)(3).
- Containers and cargo tanks will be grounded before and during transfer. 49CFR 177.837(b) & (c).
- The transfer line must be properly disengaged, and the valves and piping of both the fuel tank and truck must be checked for leaks before allowing the truck to leave the site. (40CFR 112.7 h(4) for trucks).

Thornton and the Project contractors will provide and maintain sanitary accommodations for the use of their employees during construction in a manner that complies with the requirements and regulations of health departments and other governmental bodies. These accommodations, including trash dumpsters, will be located in several locations along the Project alignment based on the general plan for construction. In its contract with the Project contractors, Thornton will require that the contractors comply with applicable laws and regulations. Construction waste will be stockpiled in construction staging areas and removed from the construction site during the construction process. Trash dumpsters will be emptied approximately every 1 to 2 weeks. The Project will not require permanent dumpsters.

Construction, operation, and maintenance activities will follow BMP for the management of wastes to avoid and minimize impacts from potential spills or other releases to the environment. Adverse impacts from the release of construction or operations wastes are not expected.

Reportable quantities, emergency response plan, spill prevention, and counter measures plan due to the Proposed Project.

Construction, operation, and maintenance activities will follow BMP for the management of wastes to avoid and minimize impacts from potential spills or other releases to the environment. Adverse impacts from the release of construction or operations wastes are not expected.

Construction, operation, and maintenance activities involving Thornton or the Project contractors bringing any hazardous materials onto the site will comply with applicable federal, state, and local laws and regulations regarding the handling, storage, disposal, transportation, and use of hazardous substances. In its contract with the Project contractors, Thornton will require that the Project contractors comply with applicable laws.

A site specific Materials Management Plan will be prepared by the construction contractor to address any contamination identified prior to or during construction. The plan would be prepared in accordance with applicable Occupational Safety and Health Administration (OSHA) requirements for construction and applicable Colorado solid and hazardous waste regulations.

Best management practices will be implemented during construction in accordance with a Spill Protection Countermeasure Control (SPCC) plan.

For any contaminated soils found during construction, the Project contractor will be required to provide volatile organic compound detection equipment, develop a materials management plan, implement a safety plan and materials management plan, determine an appropriate disposal facility, and remove and dispose of contaminated soils in accordance with applicable laws and regulations.

Balance Between Benefits and Losses

Description of foreseeable benefits of natural, agricultural, recreational, range or industrial resources within the County and opportunities to develop those resources in the future.

The Project alignment was developed to minimize impacts to natural, agricultural, and recreational areas. The alignment generally follows property lines, roads, and existing utility corridors.

Description of foreseeable losses of natural, agricultural, recreational, range or industrial resources within the County and loss of opportunities to develop those resources in the future.

Impacts to natural resources will be minimal and temporary during construction. BMPs will be implemented during construction to minimize impacts to natural resources. The area disturbed during construction will be restored to pre-construction conditions, including grade and vegetation, thus mitigating impacts to natural resources.

Criteria used for developing the Project location included minimizing impacts to agricultural uses. Property owners can continue to use the land within the easement area for purposes such as farming, grazing, or access, so long as such uses do not interfere with or endanger the operation of the Project. Agricultural use is compatible with operation of the Project because the water pipeline and fiber optic cable will be buried below the plow line.

Additional measures that will be implemented to minimize impacts to irrigated agricultural land include:

- Stripping and storing topsoil separately from excavated trench materials
- Seeding or leaving land fallow in accordance with the individual property owner’s agreed-upon reclamation procedures following construction

The Project will not result in losses of recreational, range, or industrial resources in Adams County.

The Project is a low impact, passive use that is compatible with other uses. The water pipeline and fiber optic cable will be buried, and land use effects are anticipated to be minimal after construction.

Monitoring and Mitigation Plan

Description of all Mitigation for the Project.

Describe how and when Mitigation shall be implemented and financed.

Describe Impacts that are unavoidable that cannot be Mitigated.

Description of methodology used to measure impacts of the project and effectiveness of proposed Mitigation measures.

Description, location and intervals of proposed monitoring to ensure that Mitigation shall be effective.

The Project construction phase will incorporate measures to mitigate impacts of the construction on the Project site and area residences and businesses. These mitigation measures include stormwater management BMP in compliance with Adams County guidance, control of fugitive dust, noise monitoring for compliance with Adams County noise ordinances, and authorized Project work hours. In addition, Thornton is negotiating with property owners for any required permanent Project easements and temporary construction easements. Thornton is working with Adams County on the approach for Thornton's responsibility for monitoring MS4 compliance requirements for the Project during construction.

Monitoring and mitigation measures will be employed during the construction of the Project. Construction mitigation measures that could be used to mitigate impacts are provided below. Information on financing the TWP, including mitigation, is included in Section AASI Application Checklist – 16 Financial Feasibility of the TWP; Section 2.4 Financial Feasibility of the TWP (Section 6-07-02-05); and Appendix H.

Thornton will have daily oversight representatives on site to monitor that mitigation measures are in place to control construction-related impacts.

<u>Air Quality</u>

- Speed limits for construction vehicles within the work area.
- Water application to disturbed areas, dirt access roads, and stockpiles.
- Erosion control techniques and BMP.
- Revegetation of disturbed areas where appropriate following construction activities.
- The Project will be subject to CDPHE's air permit requirements including a fugitive dust mitigation plan.
- Control of fugitive dust from the construction site will primarily through the use of water spray when conditions are dry and in accordance with permit requirements.

<u>Visual Quality</u>

- Control of fugitive dust from the construction site will be primarily through the use of water spray when conditions are dry and in accordance with permit requirements.
- Vehicle tracking pads will be used to mitigate tracking mud on public streets in accordance with permit requirements.
- Construction and silt fencing will be utilized to minimize disturbance to surrounding areas.
- Existing trees and vegetation will be preserved to the extent practicable.
- Disturbed areas will be restored and revegetated using native species as soon as practicable following construction.
- Above grade infrastructure will be painted with colors to match the adjacent environment.

Groundwater Quality and Quantity

- When the pipe trench impacts groundwater, BMPs would be implemented to minimize construction impacts to groundwater by controlling activities and materials that are in the presence of groundwater.
- Construction dewatering permits will be obtained, and the contractor shall comply with all permit conditions.
- The water pipeline design includes installation of low permeability cut-off walls at approximately 1,000 foot spacing to reduce movement of groundwater along the water pipeline.

Wetlands and Riparian Areas

- The areas of construction will be accessed using existing roads to the maximum extent possible. Any temporary access roads will be removed upon completion of the Project and the area restored to preconstruction conditions.
- During construction, open-cut trenches will be as narrow as safely practicable when crossing waters and wetlands.
- Areas temporarily impacted during construction will be returned to preconstruction conditions including grade and vegetation following completion of the proposed construction activities.
- BMPs will be implemented during construction, which will help minimize impacts in the Project work limits. These BMPs could include installing temporary fencing to deter access to sensitive areas, placing staging areas in previously disturbed upland areas, and installing sediment- and erosion-control devices to minimize surface runoff in disturbed areas.
- All temporarily disturbed areas will be planted with native seed mixes, or as reasonably specified by the property owner, and mulched.

Terrestrial and Aquatic Animals and Habitat

- The Project will have no effect on any federally listed threatened, endangered, or candidate wildlife species. A site assessment has been completed and determined no potential or suitable habitat for federally listed threatened, endangered, or candidate wildlife species is present in Project Impact Area. The USFWS confirmed that the Project would have no effect on federally listed wildlife species (USFWS, 2021c).
- Should construction occur between February and August, a preconstruction nesting bird survey will be conducted by a biologist prior to any clearing or tree removal. Where feasible, Thornton plans to clear vegetation in construction areas prior to the nesting season to minimize impacts on nesting birds. Thornton will review the CPW raptor nest data and perform nest surveys for raptors prior to the nesting season to identify potential active raptor nests prior to construction. Thornton will coordinate with CPW regarding any potential conflicts between scheduled construction and potential raptor nests and develop measures acceptable to CPW to minimize impacts on nesting raptors.
- Where feasible, in areas where construction is scheduled to occur in prairie dog colonies during times when they may be occupied by burrowing owls, prairie dogs will be controlled prior to construction between November 1 and March 14 and burrows closed to discourage nesting by burrowing owls prior to construction. Thornton will follow CPW guidelines so that impacts on nesting burrowing owls in the Project Impact Area will be minimized.

Terrestrial and Aquatic Plant Life

- A site assessment has been completed and determined the Project will have no effect on any federally listed threatened, endangered, or candidate plant species.
- Areas temporarily impacted during construction will be returned to preconstruction conditions including grade and vegetation after completion of the proposed construction activities.

- BMPs will be implemented during construction, which will help minimize impacts in the Project work limits. These BMPs could include installing temporary fencing to deter access to sensitive areas, placing staging areas in previously disturbed upland areas, and installing sediment- and erosion-control devices to minimize surface runoff in disturbed areas.
- All temporarily disturbed areas will be planted with native seed mixes, or as reasonably specified by the property owner, and mulched.
- Topsoil will be salvaged and used on disturbed areas, which would be revegetated where practicable.

Soils, Geologic Conditions and Natural Hazards

- Geotechnical investigations have been conducted along the pipeline alignment and at proposed tunneling sites to characterize the existing soils and determine the geotechnical properties. This information and recommendations contained in the geotechnical report have been developed and incorporated into the design of the Project.

Nuisances

Several noxious weed species were observed in the Project Impact Area during the 2020/2021 site visits, including cheatgrass, Canada thistle, field bindweed, and kochia. Noxious weeds within the Project work limits will be controlled using the following Integrated Pest Management methods as described by the Colorado Department of Agriculture. The following methods have been developed to control noxious weeds in a manner that prevents harm to human health and to environmentally sensitive areas such as waterways, and desirable vegetation including native trees.

- Major equipment (e.g., truck equipment and backhoes) will be cleaned by high-pressure air or water spray before being delivered to the Project work area to avoid introducing undesirable plants and noxious weeds.
- If practicable, topsoil shall not be salvaged in any area densely infested with noxious weeds.
- For areas where removal is not practicable or only a small area of noxious weeds is present, all noxious weed populations in the topsoil will be pretreated.
- Fertilizer or other soil amendments will not be used unless recommended by a revegetation specialist based on site-specific conditions. The use of fertilizers will be restricted because they can promote noxious weeds and can be detrimental to native species in the revegetation mix.
- After construction is complete, all disturbed areas will be properly revegetated as quickly as possible. Prompt revegetation with appropriate species is essential for preventing the spread of noxious weeds.
- Certified weed-free seed and mulch will be used for revegetation. Weed-free straw bales will be used for sediment barriers.
- If stands of noxious weeds become established, weed control will be implemented following an integrated approach specific to the weed species present.
- Because new control methods are continually being developed, particularly for herbicide applications, any control methods used will follow the Colorado Department of Agriculture and Adams County recommendations at the time of implementation.

Areas of Paleontological, Historic or Archaeological Importance

- To facilitate the identification of scientifically significant paleontological resources that might be encountered during construction of the Project, a qualified paleontologist will monitor construction in unincorporated Adams County within 200 yards of any previously recorded fossil locality where Denver Formation bedrock is expected to be encountered during open-cut construction.

- Areas in which Denver Formation bedrock is expected to be encountered would be determined prior to construction by evaluation of geotechnical reports prepared for design of the Project. In addition, the City will have the contractor complete a pre-construction training provided by the paleontologist prior to construction on how to identify important paleontological resources if encountered during open-cut construction in unincorporated Adams County and appropriate steps to take to preserve and collect the resource.
- If any subsurface bones or other potential paleontological resource is unearthed in an open-cut construction area in unincorporated Adams County that is not monitored by the paleontologist, Thornton will consult with the paleontologist to evaluate its significance and determine the appropriate steps to take to preserve and collect the resource and associated data.
- The Project will avoid known historic properties. Compliance with Section 106 NHPA or the Colorado State Historic Act is necessary only when state or federal permits, funding, or lands are involved. For instance, if a drainage, canal, or ditch is determined jurisdictional and the Project requires a CWA Section 404 permit, the Corps may require a pedestrian survey and State Historic Preservation Officer consultation for the permitted area, associated construction limits, and potentially a 100 foot buffer. If a historical ditch or canal requires a CWA Section 404 permit the effects on the ditch would have to be assessed and consulted on through formal documentation. Open trench construction across a canal or ditch, however, would not necessarily result in an adverse effect, provided that the ditch is returned to preconstruction contours.

Hazardous Materials

- Construction, operation, and maintenance activities involving Thornton or the Project contractors bringing any hazardous materials onto the site will comply with applicable federal, state, and local laws and regulations regarding the handling, storage, disposal, transportation, and use of hazardous substances. In its contract with the Project contractors, Thornton will require that Project contractors comply with applicable laws.
- The Project includes the installation of a buried steel water pipeline, associated water pipeline appurtenances including precast vaults to house pipeline control valves. The pipeline will be installed with open-cut trench-type construction and some tunneled installations. Hazardous, toxic and explosive substances anticipated to be used, stored, and transported includes typical general infrastructure construction materials including: fuels, lubricants, and hydraulic fluids to power and operate construction equipment and tools; cast-in-place concrete-related materials such as form release agents and concrete curing compound; pipe tunneling drilling fluids; paints and solvents to paint miscellaneous water pipeline appurtenances. There are no foreseeable impacts to the environment from the substances used for the construction of the Project.
- A Materials Management Plan will be prepared to address any contamination identified prior to or during construction. The plan will be prepared in accordance with applicable OSHA requirements for construction and applicable Colorado solid and hazardous waste regulations.
- BMPs will be implemented during construction.

Supplemental Items (if applicable)

1 Drainage Report

The impacts to drainage will be temporary impacts during construction. These temporary impacts are addressed and mitigated as shown in the contract documents stormwater management plans included in Appendix E. All temporarily disturbed areas would be returned to preconstruction grades and seeded with native vegetation, or as reasonably specified by the property owner, once construction is complete.

2 Traffic Impact Study

The impacts to traffic will be temporary impacts during construction. The Project construction documents will include guidance traffic control plans for the construction. The guidance traffic control plans are prepared in accordance with the Manual on Uniform Traffic Control Devices (MUTCD) standards and are designed to

minimize impacts to the public and traffic. The construction contractor will be required to develop and submit traffic control plans for their work for review and approval as part of the construction submittal review process.

Impacts caused by construction equipment and activity on Adams County roads will be short term during construction. Access will be maintained for local area residents. Emergency vehicle access needs will be maintained, and construction activities coordinated with local fire departments, police departments, ambulance services, and other emergency responders as necessary. Thornton places a high priority on safety during construction. Thornton will coordinate with local school districts regarding construction and haul routes and school bus traffic. Project contractors will implement traffic management plans based upon local traffic control requirements and general safe operating practices. Proper signage, flaggers, lighting, speed limits, work hours, postings, notifications, and other precautionary safety measures will be taken to protect the residents of Adams County and the Project contractors' employees.

After construction, the water pipeline and appurtenances could operate year-round, 24 hours a day; however, the water pipeline and appurtenances will be unmanned. It is anticipated that normal operations could include up to two TWP operators traveling in one pickup truck daily along the water pipeline route for a visual inspection and maintenance activities during the hours of 8 a.m. to 5 p.m. Consequently, there will be limited effects on the volume of traffic on local streets.

3 Erosion and Sediment Control Plans

The Project construction documents will include erosion and sedimentation control plans for initial, interim and final conditions in accordance with Adams County Regulations and in accordance with Adams County staff directions. These plans will apply conservation practices for control of sediment and water quality.

4 Construction/Engineering Design Plans

The following Thornton variance request and Adams County response is documented in an Adams County Memorandum, dated April 22, 2021, from Layla Bajelan, included in Appendix A.

Thornton requested a variance on this topic as follows:

> Thornton requests that Adams County confirm that this submittal requirement can be considered a condition precedent for construction as part of the Intergovernmental Agreement ("IGA"). Thornton will be constructing the Thornton Water Project between 168th Avenue and 86th Avenue in two non-concurrent packages. Requiring detailed plans and specifications prior to approval of the IGA would unnecessarily delay construction of the first package.

Adams County response:

> Adams County will require that the City of Thornton submit detailed plans and specification of the project at the time of submittal. This information will be required for the County to enter into and IGA with the City. Detailed construction plans can be submitted as a condition precedent.

Design plans for the Project are included in Appendix E. Note that the Project plans are extracted from the larger Segment A project so drawing numbers will not be continuous. For this submittal, the plans are generally 75% or higher design level documents. Issue for Construction plans and specifications will be provided to Adams County prior to start of construction.

2. AASI Application Submittal Requirements-Section 6-07-02

Section 2 of the AASI IGA Submittal Report for the Project aligns with the AASI application submittal requirements outlined in the March 5, 2021 letter from Adams County, as modified by the waivers or variances granted by Adams County for certain submittal requirements. This section follows the order of Section 6-07-02 of Adams County Development Standards and Regulations (Regulations), dated December 8, 2020. Submittal Report section headings are summarized from the Regulations. Regulation section content requirements are included in verbatim text from the Regulations and are presented in bold italicized font at the beginning of each report section, where applicable. Thornton's corresponding responses follow below in regular font. Information regarding the waivers or variances requested by Thornton and the Adams County response to the waiver or variance requests are included verbatim in each section, where applicable, and are also documented in Appendix A of this submittal report.

2.1 Information Describing the Applicant (Section 6-07-02-02)

The following subsections provide information on the applicant and the Project.

2.1.1 Applicant / Owner Contact Information

The names, addresses, email address, fax number, organization form, and business of the Applicant, and if different, the owner of the Project.

Thornton is the Owner and Applicant of the Project, and is a Colorado home rule municipality that provides, amongst other services, domestic water service to its customers in Adams County, Colorado.

Thornton Administration

Thornton – City Manager
Kevin S. Woods
9500 Civic Center Drive
Thornton, Colorado 80229
Phone: 303-538-7002
Email: Kevin.Woods@ThorntonCo.gov

Thornton – Infrastructure Executive Director
Brett Henry
12450 Washington Street
Thornton, Colorado 80241
Phone: 720-977-6404
Email: Brett.Henry@ThorntonCo.gov

Project Key Personnel

Thornton – Project Director and Infrastructure Engineering Director
Jason Pierce
12450 Washington Street
Thornton, Colorado 80241
Phone: 720-977-6233
Fax: 720-977-6201
Email: Jason.Pierce@ThorntonCo.gov

Thornton – Project Engineer
John Himyak
12450 Washington Street
Thornton, Colorado 80241
Phone: 720-977-6264
Fax: 720-977-6201
Email: John.Himyak@ThorntonCo.gov

Thornton - Project Manager
Eduardo Moreno
12450 Washington Street
Thornton, Colorado 80241
Phone: 720-977-6272
Fax: 720-977-6201
Email: Eduardo.Moreno@ThorntonCo.gov

2.1.2 Owner Operations, Design Consultant, and Contractor Contact Information and Qualifications

The names, addresses and qualifications, including those areas of expertise and experience with projects directly related or similar to that proposed in the application package, of individuals who are or shall be responsible for constructing and operating the Project.

The following provides contact information for key personnel for the Owner's water system operations and for the consulting engineer designing the Project. Qualifications are presented in subsequent subsections.

Project Owner Operations Key Personnel

Thornton – Utility Maintenance Supervisor – Class 4 Water Distribution Certification
Steve Crow
12450 Washington St.
Thornton, Colorado 80241
Phone: 720-977-6553
Steve.Crow@ThorntonCo.gov

Thornton – Water Treatment and Quality Manager – Class A Water Plant Operator Certification
Martin Kimmes
Wes Brown Water Treatment Plant
3651 East 86th Avenue 80229
Thornton, Colorado
Phone: 303-255-7764
Martin.Kimmes@ThorntonCo.gov

Consulting Engineer Key Personnel

AECOM – Consulting Engineer, Project Manager
Bill Wemmert, PE
7595 Technology Way, Suite 200
Denver, CO 80237
Phone: 303-478-7343
Email: Bill.Wemmert@aecom.com

AECOM – Consulting Engineer, Project Engineer
Curt Thompson, PE
7595 Technology Way, Suite 200
Denver, CO 80237
Phone: 303-796-4726
Email: Curt.Thompson@aecom.com

AECOM – Consulting Engineer, Project Engineer
Martin Garcia, PE
7595 Technology Way, Suite 200
Denver, CO 80237
Phone: 303-842-9288
Email: Martin.Garcia@aecom.com

2.1.3 Facility Operations

Thornton employs Colorado Certified Water Professional staff that are qualified and certified to operate its domestic water delivery systems.

Thornton's lead operators for these systems are as follows:

- Steve Crow, Utility Maintenance Supervisor – Class 4 Water Distribution Certification
- Martin Kimmes, Water Treatment and Quality Manager – Class A Water Plant Operator Certification

Thornton currently operates the following facilities as part of its domestic water delivery system:

- Two advanced water treatment plants with a combined capacity of 70 million gallons per day
- Over 580 miles of treated water transmission pipelines with diameters up to 60 inches
- Approximately 16.5 miles of raw water transmission pipelines with diameters up to 48 inches
- Seven treated water pump stations with capacities up to 94.71 million gallons per day
- Seven raw water pump stations with capacities up to 60 million gallons per day

2.1.4 Construction Phase

Thornton has not selected a construction contractor for construction of the Project. Thornton has pre-qualified construction contractors that will be permitted to bid on the work based on the following relevant criteria:

1. Equipment and resources available to perform the work properly and expeditiously within the time available;
2. Financial resources to meet obligations incidental to the work;
3. The construction firm's track record of successful project completion for similar projects, with minimal interference to the public or any public complaints, as demonstrated through references;
4. Appropriate technical experience of the firm's key-personnel (resumes of key personnel detailing similar experience on other projects);
5. The firm's safety program and safety record on completed and ongoing projects (include proof of Experience Modification Rating [EMR]), Total Recordable Incident Rates (TRIR), Days Restricted Time (DART), and any fatalities in the last three years;
6. Track record working/dealing with several Governmental, multi-jurisdictional permitting agencies for a single project;
7. Successful completion of at least three water conveyance pipeline projects of a similar size and scope. Qualifying projects shall include installation of 48-inch diameter or larger pipeline, a minimum of 10,000 linear feet (each project). Two of the three projects must be within the State of Colorado or within the Western United States. Projects of similar nature shall exceed $30,000,000 in contract value;
8. Successful completion of at least two bored pipeline installations crossing a flowing river or active waterway of similar size to the St. Vrain or Platte Rivers. Projects presented as qualifying experience for may also be used for qualifying experience for this item. This work may have been performed by a subcontractor;
9. Qualifying projects must have been performed for municipalities or quasi-municipal water district clients, or for industrial type applications such as mining. Projects performed for developers or private entities will not be considered as qualifying projects;
10. Qualifying projects must have demonstrated the existence of a successful relationship with public agencies as determined by references;
11. Bonding capacity per project must be $45,000,000 or higher. Note that some of the construction packages may be in the range of $60,000,000. Construction contractors may bid on construction packages up to their bonding limit, based on the Engineer's cost estimate for construction for each of the bid packages. The construction contractor shall have the ability to bond this project at 100 percent (%) of the construction value; and
12. Experience on similar projects. Projects must include steel water conveyance pipelines and/or pump stations and have been constructed for a municipality, quasi-governmental agency. All qualifying experience and projects must have been completed within the past eight years.

2.1.5 Design Phase

Thornton Engineer and Project Management

Thornton – Project Engineer
John Himyak
12450 Washington Street
Thornton, Colorado 80241
Phone: 720-977-6264
Fax: 720-977-6201
Email: John.Himyak@ThorntonCo.gov

Thornton – Project Manager
Eduardo Moreno
12450 Washington Street
Thornton, Colorado 80241
Phone: 720-977-6272
Fax: 720-977-6201
Email: Eduardo.Moreno@ThorntonCo.gov

Consulting Engineer

AECOM – Consulting Engineer, Project Manager
Bill Wemmert, PE
7595 Technology Way, Suite 200
Denver, CO 80237
Phone: 303-478-7343
Email: Bill.Wemmert@aecom.com

AECOM – Consulting Engineer, Project Engineer
Curt Thompson, PE
7595 Technology Way, Suite 200
Denver, CO 80237
Phone: 303-796-4726
Email: Curt.Thompson@aecom.com

AECOM – Consulting Engineer, Project Engineer
Martin Garcia, PE
7595 Technology Way, Suite 200
Denver, CO 80237
Phone: 303-842-9288
Email: Martin.Garcia@aecom.com

2.1.6 Authorization by Project Owner

Authorization of the application by the Project owner, if different than the Applicant.

Thornton is both the Project Owner and the Applicant.

2.1.7 Applicant's Financial and Technical Capability

Documentation of the Applicant's financial and technical capability to develop and operate the Project, including a description of the applicant's experience developing and operating similar projects.

Thornton has operated a water utility since 1963, and as Colorado's fifth largest provider of treated domestic water (based on annual treated water production), Thornton has proven experience and capability to develop and operate the Project, both from a financial and technical standpoint.

Thornton's current water system includes:

- Two advanced water treatment plants with a combined capacity of 70 million gallons per day.
- Over 580 miles of treated water transmission pipelines with diameters up to 60 inches.

- Approximately 16.5 miles of raw water transmission pipelines with diameters up to 48 inches.
- Seven treated water pump stations with capacities up to 94.71 million gallons per day.
- Seven raw water pump stations with capacities up to 60 million gallons per day.

Thornton's Water Utility Enterprise currently employs 82 staff members to operate its water system.

Thornton in 2014 determined to construct the TWP and initiated a study to establish the rates and fees needed to fund the TWP and subsequently set rates and fees to ensure TWP funding.

Thornton also added staff resources to manage TWP implementation. Currently, the staff dedicated to the TWP include the following:

- Jason Pierce – Project Director: Over 20 years of experience in the design and construction of civil, water and wastewater capital improvement projects
- John Himyak – Project Engineer: Licensed engineer with over 32 years of experience on large projects including pipeline/ tunneling projects
- Chuck Seest – Project Support Manager: Licensed CPA with over 30 years of experience in municipal and capital project finances.

Thornton has contracted with Jacobs Engineering, Inc. (Jacobs) for Owner's Advisor services to assist with planning and management of the TWP. Jacobs is a multi-national engineering firm with extensive experience in major pipeline projects.

Thornton has contracted with several large engineering design firms to design various components of the TWP.

Thornton has completed 7 miles of construction of the TWP water pipeline in the towns of Johnstown and Windsor and has another 54 miles of TWP water pipeline currently being designed.

Thornton has a formal policy of maintaining six months of cash to meet expenses. Thornton also has a history of adjusting tap fees for new connections and water rates for ongoing consumption by existing customers in order to meet capital and operating expenses, including debt service payments.

Thornton's Water Enterprise currently has the following ratings: Moody's – "Aa2" and Standard & Poor's – "AA / Stable". The combination of prudent management policies and strong credit ratings allows Thornton to achieve the lowest possible interest rates when financing the TWP.

All related annual appropriations to fund the TWP are reviewed by Thornton's Finance and Budget Departments and included within the overall City Budget, which is reviewed and voted upon for approval by the Thornton City Council.

2.2 Information Describing the Project (Section 6-07-02-03)

The TWP is a proposed water delivery system that will bring water purchased by Thornton in the 1980s from the WSSC system through Larimer, Weld, and Adams counties to Thornton's treatment plants. Segment A of the TWP extends from the intersection of Quebec Street and 168th Avenue to the Wes Brown Water Treatment Plant located near the intersection of Colorado Boulevard and 86th Avenue. The Project is the portion of Segment A that is located within unincorporated Adams County. Figure 1 and Figure 2, located in Appendix D, illustrate the Project alignment and the Adams County and Thornton municipal limits.

The Project includes approximately 3.6 miles of a buried 42-inch diameter water pipeline capable of conveying 40 million gallons per day, and associated appurtenances. Project appurtenances include buried fiber optic cable, pipeline cathodic protection system, and various buried water pipeline structures and valve vaults including access manways, blow-off assemblies, air release vaults, and isolation valve vaults. The Project extends from the intersection of Quebec Street and 168th Avenue to Thornton's Wes Brown Water Treatment Plant located near the intersection of Colorado Boulevard and 86th Avenue. Figure 1 and Figure 2, located in Appendix D, illustrate the Project water pipeline alignment. The figures identify Thornton's jurisdiction with a hatch pattern and Adams County jurisdiction without the hatch pattern.

The water pipeline will be buried at a minimum depth of 5 feet below grade. The depth of bury will vary based on existing utility crossings, road crossings, water crossings, other existing or proposed features, and property owner's reasonable preferences. Areas disturbed for construction of the water pipeline will be restored to pre-construction grades and revegetated to pre-construction vegetation where appropriate after construction. Typically, the Project consists of a 50-foot permanent easement for the water pipeline and an additional 40-foot temporary easement for construction.

2.2.1 Project Plans and Specifications

Detailed plans and specifications of the Project.

The following Thornton variance request and Adams County response is documented in an Adams County Memorandum, dated April 22, 2021, from Layla Bajelan, included in Appendix A.

Thornton requested a variance on this topic as follows:

> Thornton requests that Adams County confirm that this submittal requirement can be considered a condition precedent for construction as part of the Intergovernmental Agreement ("IGA"). Thornton will be constructing the Thornton Water Project between 168th Avenue and 84th Avenue in two non-concurrent packages. Requiring detailed plans and specifications prior to approval of the IGA would unnecessarily delay construction of the first package.

Adams County response:

> Adams County will require that the City of Thornton submit detailed plans and specification of Segment A at the time of submittal. This information will be required for the County to enter into and IGA with the City. Detailed construction plans can be submitted as a condition precedent.

Design plans for the Project are included in Appendix E. Note that the Project plans are extracted from the larger Segment A project so drawing numbers will not be continuous. For this submittal, the plans are generally 75% or higher design level documents. Issue for Construction plans and specifications will be provided to Adams County prior to start of construction.

2.2.2 Alternatives

Descriptions of at least three (3) or more alternatives to the Project that were considered by the Applicant.

Multiple alternative Project alignments from 168th Avenue to approximately 120th Avenue were considered to address impacts to developed and undeveloped property and to evaluate alternative crossings of the E-470 (highway) corridor. These alternative Project alignments covered an east-west area from the Quebec Street corridor to the Monaco Street corridor. The Quebec Street corridor was selected as the preferred alignment for the Project from 168th Avenue to 120th Avenue. These alternative alignments are illustrated in Figure 3, Alternative Alignments, located in Appendix D.

Five alternative Project alignments extending from 120th Avenue on the north to the Wes Brown Water Treatment Plant were evaluated for various qualitative and quantitative criteria including impacts to roadways and right-of-way, public property and private property, land use, existing utilities, and use of existing utility corridors. The alternative analysis evaluated water pipeline alignments within an area generally from Riverdale Road/McKay Road on the east to Colorado Boulevard on the west. The alternative water pipeline alignments are illustrated on Figure 4, Alternative Alignments, located in Appendix D. Goals and objectives from the Imagine Adams County planning documents were included in the alignment evaluation by including ratings and ranking considerations that addressed Adams County's objectives to avoid introducing changes, easements, and road impacts to Riverdale Road. Given the proximity of some of the alternative water pipeline alignments to Riverdale Road, the Adams County's Riverdale Road Corridor Plan was a key consideration in the planning and evaluation of the alternative water pipeline alignments located near Riverdale Road. Following the evaluation and review by Thornton, a water pipeline alignment focusing on paralleling the existing Xcel Energy powerline corridor was selected as the preferred water pipeline alignment.

2.2.3 Schedule

Schedules for designing, permitting, constructing, and operating the Project including the estimated life of the Project.

The following are estimated milestone dates for the Project:

Design and Permitting	Nov 2019 – March 2022
Bid and Award	March 2022 – June 2022
Construction	June 2022 – Feb 2024
Segment A Startup and Operation	May 2024

Thornton has no intent to reclaim, phase out, or decommission the Project. The Project will be maintained, monitored, and repaired/replaced as needed.

2.2.4 Project Need

The need for the Project, including existing/proposed facilities that perform the same or related function; and population projections or growth trends that form the basis of demand projections justifying the Project.

The purpose of the TWP is to convey domestic water from the WSSC system in northern Colorado purchased by Thornton in the mid-1980s to Thornton to enhance Thornton's water supply reliability and drought resiliency, help address source water quality issues, and meet municipal and industrial demands of Thornton's water customers through 2065.

Thornton's population is projected to increase from its current estimated population of 146,427 residents (Thornton, Housing and Population Report: 2020 4th Quarter) to 242,000 residents by 2065. Thornton has proactively planned for the anticipated population increase to ensure that Thornton can provide a reliable, high quality, and cost-efficient water supply to meet the needs of its residents and businesses. Thornton's existing water system, including an extensive water conservation program, has served to meet municipal and industrial water needs of Thornton's current water customers in its service area, as well as to meet existing contractual obligations. Thornton water supply projects in development will allow Thornton to provide water service up to a population of 158,000 residents. Beyond 158,000 residents, which Thornton projects to reach by 2025, additional water supplies are needed to ensure reliable water service to Thornton's water customers. Water from the WSSC system has been decreed in Water Court for use in Thornton, but Thornton currently lacks the infrastructure to deliver that water to Thornton. The TWP will provide the necessary infrastructure for delivery of this water to Thornton and the means by which Thornton's customers will receive the benefit of Thornton's decades-long planning for and investment in this additional water supply. The TWP is being configured to deliver an average of 14,000 acre-feet of water annually, which is sufficient to meet the municipal and industrial demands of Thornton's water customers through 2065. In addition to meeting water demand, in adding this high-quality source, the TWP provides enhanced water supply diversity, reliability, quality, and drought resiliency to Thornton's supply.

2.2.5 Conservation Techniques

Description of all conservation techniques to be used in the construction and operation of the Project.

The Project is developed to minimize the Project footprint within unincorporated Adams County and minimize impacts to residents, the public, and the natural environment. Conservation considerations have been addressed during the Project concept development and design, and are applied during the Project construction, and subsequently through the operational life of the facility. Adams County planning documents were utilized to help establish the design criteria so they could be incorporated into the development of the Project. Examples of conservation through design and construction implementation include:

- Development of the Project alignment to minimize impacts to residential development and the public by avoiding developed areas and impacts to existing roadways in unincorporated Adams County.

- Minimization of utility and construction related impacts to high quality agricultural lands. The location of the Project was developed to minimize impacts to agricultural lands by following property lines and utilizing existing utility corridors where possible.
- Implementation of BMPs for management and control of stormwater runoff, soil erosion and sediment control are addressed by the Project stormwater management plans. These plans have been developed in conjunction with requirements of Adams County Regulations and the Sustainability Initiatives and Natural Resources policies from the Adams County Comprehensive Plan.
- Riparian, wetland and drainageway construction impacts are minimized by utilizing construction setbacks, limiting construction work areas, and restoring these areas to pre-existing grading sections and appropriate surface restoration.

The TWP's operational conservation approach is guided by Thornton's Sustainability Action Agenda which identifies eight action areas in which Thornton seeks to advance sustainability efforts. Included among these are Climate Action and Carbon Free Energy Supply. Thornton's Climate Action goals include reducing communitywide greenhouse gas emissions by 50% from 2018 levels by 2030, and making infrastructure more resilient to climate change impacts. Thornton's Carbon Free Energy Supply goals include promoting new renewable energy projects throughout the community, as well as pursuing renewable energy sources for Thornton facilities and operations where sources are cost-neutral, cost-beneficial, and/or useful to hedging against future rate increases. Thornton is exploring opportunities to advance these goals as it pursues all of its water infrastructure projects, including the TWP.

Thornton has historically maintained one of the lowest residential daily per capita water consumption rates among cities in the Front Range. This is a result of efforts that Thornton has pursued over the past 20 years to create and instill solid water conservation ethic throughout the community. Thornton is currently implementing its 2018 Water Efficiency Plan, which builds upon the successes of the past by pursuing strategies to promote water efficient technologies and help change customer water use behaviors over the long term. Thornton's water efficiency programs provide assistance to customers in the form of education and incentives, including rebates and free programs, that are designed to increase water use efficiency. Thornton's water utility is also upgrading its infrastructure and practices to increase system efficiency, including installing Advanced Metering Infrastructure and high-resolution meters, and integrating water leak technologies into its operations.

2.3 Property Rights, Permits and Other Approvals (Section 6-07-02-04)

2.3.1 Permits and Approvals

A list and copies of all other federal, State and local permits and approvals that have been or shall be required for the Project, together with any proposal for coordinating these approvals with the County permitting process.

The overall permitting strategy for the TWP (including the Project) is to employ design and construction methods that avoid or minimize environmental impacts. Table 4 summarizes the permits and regulatory approvals that are anticipated to be required for the Project.

Table 4. Summary of Permits and Approvals

Permits / Approvals	Status
Federal Agencies	
Clean Water Act Section 404 Permit	Thornton will apply for applicable USACE Nationwide Permits for water body crossings of Waters of the United States (jurisdictional waters) to allow for open-cut construction. If a Nationwide Permit is not obtained, USACE will be consulted before construction, and concurrence with USACE will be obtained that no permit is required for crossing jurisdictional waters and crossing will be constructed with trenchless construction methods. A Jurisdictional Determination Request for Segment A is under review by the USACE Denver Regulatory Office.

Table 4. Summary of Permits and Approvals

Permits / Approvals	Status
Endangered Species Act Section 7 Consultation Migratory Bird Treaty Act	The Project alignment is being configured to not impact federally listed threatened or endangered (T&E) species. No habitat for any federally listed species is present in the Project area as described in the Natural and Cultural Resources Assessment report in Appendix I. Informal consultation will be conducted with the United States Fish and Wildlife Service (USFWS) to get concurrence that USFWS has no concerns related to T&E species and species protected by the Migratory Bird Treaty Act and that no further consultation is required for the Project.
State Agencies	
Clean Water Act Section 402 Construction Stormwater General Permit	The construction contractor will obtain a Construction Stormwater General Permit from the Colorado Department of Public Health and Environment (CDPHE) prior to construction and implement procedures outlined in the Project stormwater management plan included in the Project contract documents.
General Permit for Construction Dewatering Activities	A General Permit for Construction Dewatering Activities will be obtained by the construction contractor from the CDPHE prior to construction.
Construction Permit or General Construction Permit, Land Development Projects	A Land Development Air Pollutant Emissions Notice (APEN) will be submitted to CDPHE, Air Pollution Control Division and applicable construction-related Colorado air permits will be obtained by the construction contractor prior to construction. The construction contractor will apply for and obtain either a Construction Permit or a General Construction Permit as required based on contractor's means and methods for construction.
Section 106 of the National Historic Preservation Act	If required, the USACE will consult with the State Historic Preservation Office (SHPO) on National Historic Preservation Act Section 106 compliance as part of the 404-permitting process.
State Sensitive Species and Raptors	Habitat for black-tailed prairie dogs likely occurs along the Project and may be temporarily impacted during construction. Additionally, suitable habitat for Western burrowing owl may occur along the Project since they often nest in abandoned prairie dog burrows. Field surveys will be conducted to map existing prairie dog colonies and determine the extent of any required temporary displacement/relocation ahead of construction activities. Activities will be coordinated with Colorado Parks and Wildlife (CPW) as required. Raptor nests may be present along the Project. Field surveys have been conducted in 2021 to map existing nests along the Project alignment, and then again in 2022 prior to construction. Thornton will coordinate with CPW to verify appropriate methods to avoid or minimize impacts to raptor nests.
Adams County	
Adams County Open Space	Thornton has coordinated with Adams County Open Space representatives for review of the Project water pipeline alignment. The design of the Project has been revised to address comments. Adams County Open Space representatives concurred with the location of the water pipeline and associated permanent and temporary easements on Adams County-owned property.
Adams County Access Permit	Thornton is coordinating with Adams County to review access points from Adams County roads for Segment A construction operations. Proposed Access Points are shown on Appendix K. Drainage culvert requirements will be reviewed as part of the permit.
Adams County Utility Street Cut Permit	Utility Street Cut permits will be required from the Adams County Public Works Department. Thornton is coordinating with Adams County in advance of construction for the requirements of these permits. The construction contractor will obtain the permit.
Adams County Clearing and Grading Permit	Thornton is coordinating with Adams County to review the requirements for the permit. An Adams County Engineering Review of the permit application may be required.
Adams County Development Engineering Review and Requirements	An Adams County Engineering Review of the permit application may be required. Project plans are included with this submittal document in Appendix E.
Adams County Infrastructure Permit, Underground Utility Permit	Thornton is coordinating with Adams County to review the requirements for this permit. An Adams County Engineering Review of the permit application may be required.
Adams County Stormwater Quality Permit	Thornton is coordinating with Adams County to review the requirements for the permit and compliance with the requirements of Adams County Municipal Separate Storm Sewer System (MS4) permit. An Adams County Engineering Review of the permit application may be required
Adams County Floodplain Use Permit	Temporary or permanent impacts within the floodplain will require submission of a Floodplain Use Permit, which will be supported by a No-Rise Certification memorandum.
Adams County 1041 Review and Requirements	This submittal document is intended to provide Adams County with the information required to review the Project.

2.3.2 Agency Consultation Correspondence

Copies of all official federal and State consultation correspondence prepared for the Project; a description of all Mitigation required by federal, State and local authorities; and copies of any draft or final environmental assessments or impact statement required for the Project.

The following Thornton variance request and Adams County response is documented in an Adams County Memorandum, dated April 22, 2021, from Layla Bajelan, included in Appendix A.

Thornton requested a variance on this topic as follows:

> Thornton requests that Adams County confirm that this submittal requirement can be considered a condition precedent for construction as part of the IGA. Thornton and its engineers and contractors will have correspondence with federal, state and local authorities, and will be determining appropriate mitigation, up to start of construction. The TWP is being configured and designed to not require any federal environmental assessments or impact statements. Requiring this information prior to approval of the IGA would unnecessarily delay the TWP.

Adams County response:

> The County will accept these submittal items as a Condition Precedent but reserves the right to request documentation during the review process that it deems necessary for a complete review and approval.

Agency consultation correspondence will be provided prior to construction and will include correspondence from the following agencies if applicable:

- USFWS
- CPW
- USACE

2.3.3 Water Use and Water Rights

Description of the water to be used by the Project and alternatives, including the source, amount, the quality of such water, the Applicant's right to use the water, including adjudicated decrees, applications for decrees, proposed points of diversion, and the existing uses of water. If an augmentation plan has been filed in court, the applicant must submit a copy of that plan.

The following Thornton variance request and Adams County response is documented in an Adams County Memorandum, dated April 22, 2021, from Layla Bajelan, included in Appendix A.

Thornton requested a variance on this topic as follows:

> Thornton requests that Adams County waive this submittal requirement. The TWP is the siting and construction of an underground water conveyance pipeline that will not itself "use" water.

Adams County response:

> Due to the nature of this request, the County will waive this requirement. The City of Thornton has previously received approvals for the water rights and the beginning and end storage facilities. This request will only be conveying water from one approved location to another.

2.3.4 Regional Water Quality Plan

Regional Water Quality Management Plan: Provisions of the regional Clean Water Plan, promulgated by the Denver Regional Council of Governments, that apply to the Project and assessment of whether the Project would comply with those provisions.

The following Thornton variance request and Adams County response is documented in an Adams County Memorandum, dated April 22, 2021, from Layla Bajelan, included in Appendix A.

Thornton requested a variance on this topic as follows:

> Thornton requests that Adams County waive this submittal requirement. The TWP is the siting and construction of an underground water conveyance pipeline that has no wastewater impacts. In addition, the Denver Regional Council of Governments no longer has a regional Clean Water Plan.

Adams County response:

> Adams County will waive this requirement, as the water being conveyed is clean and meant for domestic use. In additions, the County acknowledges that the Denver Regional Council of Governments no longer has a regional Clean Water Plan.

2.4 Financial Feasibility of the Project (Section 6-07-02-05)

The following Thornton variance request and Adams County response is documented in an Adams County Memorandum, dated April 22, 2021, from Layla Bajelan, included in Appendix A.

Thornton requested a variance on this topic as follows:

> Thornton requests that Adams County waive this submittal requirement. The City of Thornton operates a Water Utility Enterprise under the direction of the Thornton City Council. The Water Utility Enterprise funds its cost-of-service operations through rates and fees charged to the customer of the Water Utility Enterprise. The City council has identified the funding required for the Project and has established rates and fees to cover the expenses of the Project, as well as the capital and operating expenses of the remainder of the Water Utility Enterprise.

Adams County response:

> Adams County will require that the applicant submit the documentation that the City Council approved when identifying the funding required for the Project.

Appendix H documents include the Thornton City Council ordinances appropriating money for the Water Fund for each of the years 2016 through 2021, and the pages from the associated years' Budget Book that shows how much of the Water Fund appropriation was allocated to the TWP.

The estimated construction costs and period of construction for each Development component.

The estimated cost of the Project is $17.7 million. The construction schedule for Segment A is as follows:

Construction	June 2022 – Feb 2024
Segment A Startup and Operation	May 2024

Revenues and operating expenses for the Project.

There are no revenues specifically associated with the TWP. Thornton collects revenue pursuant to the rates and fees set by the Thornton City Council for providing water service to Thornton's customers.

Operating expenses for the Project will be funded by Thornton's Water Utility Enterprise as part of the overall operation and maintenance of Thornton's domestic water delivery system. The Water Utility Enterprise is funded through rates and fees charged to Thornton's water customers.

The amount of any proposed debt and the method and estimated cost of debt service.

Though not specifically associated with the Project, Thornton anticipates issuing revenue bonds for construction of the TWP in the amount of up to $150,000,000, with related annual debt service payments estimated at $8,300,000 to be paid through rates and fees collected by the Water Utility Enterprise.

Details of any contract or agreement for revenues or services in connection with the Project.

Service is provided pursuant to Thornton's Charter and City Code. Rates and fees collected for service are used to fund Thornton's cost-of-service domestic water delivery system.

Description of the persons or entity(ies) who shall pay for or use the Project and/or services produced by the Development and those who shall benefit from any and all revenues generated by it.

The customers that receive water service from Thornton's Water Utility Enterprise both fund and receive the benefit of the water provided by Thornton's cost-of-service domestic water delivery system.

Cost of all mitigation measures proposed for the Project.

The Project construction phase will incorporate several measures to mitigate impacts of the construction on the Project site and area residences and businesses. These mitigation measures include stormwater management BMP in compliance with Adams County guidance, control of fugitive dust, noise monitoring for compliance with Adams County noise ordinances, and authorized Project work hours. The estimated cost for these mitigation measures is $1,225,000.

Detailed description as to how the Project shall be financed to show that the Applicant has the ability to finance the Project.

Thornton anticipates cash funding up to $300,000,000 of the TWP costs. Thornton anticipates issuing revenue bonds in the amount of up to $150,000,000, with related annual debt service payments estimated at $8,300,000, to cover the portions of the TWP that will not be cash funded. The following presents reporting from Standard & Poor's:

Per the Standard & Poor's rating report for Thornton Water/ Sewer dated October 1, 2020 that assigned a rating of "AA/ Stable", – "The rating (AA) reflects our view of the water enterprise's general creditworthiness of its very strong enterprise risk profile and extremely strong financial risk profile. The city has a predominantly residential customer base, with affordable service rates and adequate operational capacity to meet current demand. To meet the financing requirements of the TWP (a large scale water infrastructure project which will deliver significant water resources), we recognize that the system has strategically built close to 5 years of cash through fiscal 2020, and will steadily draw down cash reserves to roughly 1.5 years in the near future."

The rating report continues "The stable outlook reflects our view that the city will continue to adjust rates to fund the large capital plan of its water system, while maintaining its very strong all-in coverage metrics and liquidity position. In addition, our outlook reflects our opinion of the strength of management policies and our expectation that the management will continue to preserve the system's financial profile and meet pay-as-you-go capital requirements. In addition, we believe the financial profile cold withstand a short-term decline in revenue from changing economic conditions, particularly uncertainty related to COVID-19."

The report continues "The city's water fund pro forma debt-to-capitalization is moderate, at 27% after including the additional leverage in the near future."

2.5 Land Use (Section 6-07-02-06)

2.5.1 Land Uses

Description of existing land uses within and adjacent to the Impact Area.

Aerial mapping presented in Figure 1 and Figure 2 in Appendix D illustrates the type of land use and infrastructure development on each parcel crossed by the Project as of mid-2019. The parcel identification information crossed by the Project are presented on Figure 5 and Figure 6 in Appendix D. Table 5 provides identification of associated land use for those parcels. Land use within and adjacent to the Project Impact area are agricultural, residential, public/quasi-public, and municipal areas of Thornton. As defined by Adams County the Impact Area addressed in this report are those geographic areas, including the development area, within 500 feet of the Project. Parcels that are currently platted or planned for future residential development are described in Table 5.

Table 5. Land Use of Parcels Crossed by the Project

Affected Adams County Parcel Figure 5 and Figure 6 Map Identification Number (ID)	Owner and Land Use	Comments
(1)	Owner ERN LIMITED PARTNERSHIP ET AL (ERN) PARCEL NOs: 0157104200003, 0157104300002 Land Uses Current: Agricultural	Land accommodates oil and gas facilities and grazing activities. Project located in easement.
(2)	Owner TODD CREEK VILLAGE PARK / RECREATION DISTRICT PARCEL NO: 0157105404044 Land Uses Current: Residential	Project is proposed to be located within the current Todd Creek Village landscape buffer and the future planned Thornton Quebec Street right-of way
(3)	Owner QUEBEC 7 LLC PARCEL NO: 0157108000004 Land Use Current: Agricultural	Property is platted for a residential subdivision. Project is proposed to be located within the future planned Thornton Quebec Street right-of-way
(4)	Owner SHAFFER JANET L UND 1/2 INT AND AYLOR JOHN L JR TRUST THE UND 1/2 INT PARCEL NO: 0157120001007 Land Use Current: Residential	Project located in easement, a portion of which is in future ROW
(5)	Owner FITTS DANNY AND SHEPHERD FRANCES PARCEL NO: 0157133010001 Land Use Current: Residential	Project located in easement
(6)	Owner BISHARD AMERICA PARCEL NO: 0157132400009 Land Use Current: Agricultural	Project located in easement
(7)	Owner MC CLENDON MICHAEL W AND RODENZ PATRICIA A PARCEL NO: 0157132400008 Land Use Current: Residential	Project located in easement
(9)	Owner CLEAR CHANNEL BROADCASTING INC. PARCEL NOs. 0172105200004, 0172105200006 Land Use Current: Agricultural	Project located in easement. Parcel is in platting for future subdivision; Land accommodates broadcasting antenna towers
(10)	Owner MC INTOSH ROBIN L JR PARCEL NO. 0172105000047 Land Use Current: Agricultural	Project located in easement

Table 5. Land Use of Parcels Crossed by the Project

Affected Adams County Parcel Figure 5 and Figure 6 Map Identification Number (ID)	Owner and Land Use	Comments
(11)	Owner RICHARD H. AND JUANITA M. LARSON PARCEL NO. 0172108000048 Land Use Current: Agricultural	Project located in easement
(12)	Owner ADAMS COUNTY BOARD OF COUNTY COMMISSIONERS PARCEL NO. 0172108200003 Land Use Current: Public/Quasi Public	Project located in easement
(13)	Owner ADAMS COUNTY - ADAMS COUNTY PARKS (ATTN RICK ANDERSON) PARCEL NOs. 0172108200006, 0172108000034 Land Use Current: Public/Quasi-Public	Project located in easement
(14)	Owner ADAMS COUNTY PARCEL NO. 0172108300003 Land Use Current: Public/Quasi-Public	Project located in easement
(15)	Owner LEON MIKE PARCEL NO. 0172118100001 Land Use Current: Agricultural	Project located in easement
(16)	Owner PUBLIC SERVICE CO OF COLORADO C/O PROPERTY AND LOCAL TAXES PARCEL NO. 0172117000014 Land Use Current: Public/Quasi Public	Project located in easement. Land accommodates powerline transmission towers
(17)	Owner PUBLIC SERVICE CO OF COLORADO C/O PROPERTY AND LOCAL TAXES PARCEL NO. 0172117000015 Land Use Current: Public/Quasi Public	Project located in easement. Land accommodates powerline transmission towers
(18)	Owner PUBLIC SERVICE CO OF COLORADO C/O PROPERTY AND LOCAL TAXES PARCEL NO. 0172117000034 Land Use Current: Public/Quasi-Public	Project located in easement. Land accommodates powerline transmission towers
(19)	Owner PUBLIC SERVICE CO OF COLORADO C/O PROPERTY AND LOCAL TAXES PARCEL NO. 0172130000048 Land Use Current: Public/Quasi-Public	Project located in easement. Land accommodates powerline transmission towers

Note:
*Land Use information is based on Adams County GIS Data dated December 22, 2021 from Adams County website https://data-adcogov.opendata.arcgis.com/datasets/9f04f793f9764b44be2fa29036959a84_0/explore?location=39.856295%2C-104.937375%2C17.00

2.5.2 Land Use Provisions and Plans

Description of provisions from local land use plans that are applicable to the Project and an assessment of whether the Project shall comply with those provisions.

The Adams County Comprehensive Plan, Imagine Adams County (adopted December 2012), was reviewed during the development of this Submittal Report. The Adams County Comprehensive Plan is the official policy document of the Adams County Planning Commission and Board of County Commissioners. and consists of four distinct but integrated components: 1) Comprehensive Plan Update; 2) Transportation Plan Update; 3) Hazard Mitigation Plan, and 4) Open Space, Parks, and Trails Master Plan. The Adams County Comprehensive Plan and the companion documents Adams County Transportation Plan (adopted December 2012), Adams County Hazard Mitigation Plan (adopted December 2020), and the Adams County Open Space, Parks, and Trails Master Plan (adopted November 16, 2012) were reviewed for applicability to the Project. The Adams County Comprehensive Plan, the Adams County Hazard Mitigation Plan, and the Adams County Open Space, Parks, and Trails Master Plan were found to be applicable to the Project and discussion of compliance with those plans follows.

Adams County Comprehensive Plan

Goals

The Adams County Comprehensive Plan includes key goals for a more sustainable and resilient Adams County. The Project complies with the following goals:

Promote Coordinated and Connected Growth

A key objective of the Adams County Comprehensive Plan is to promote a more integrated approach to planning and decision-making to guide the location, type, and quality of future growth of the County; and the development of infrastructure needed to serve and connect that growth. The Adams County Comprehensive Plan provides a concise statement of Adams County's objectives for future development within unincorporated areas of Adams County and in municipal growth areas. Thornton's municipal growth areas fall within unincorporated Adams County. Thornton has proactively planned for the anticipated population increase to ensure that Thornton can provide a reliable, high quality and economical water supply to meet the needs of its residents and businesses. The TWP will provide the necessary infrastructure for delivery water to Thornton and provide the means by which Thornton's customers, including future customer within Thornton's municipal growth areas likely to be annexed by Thornton in the future, will receive the benefit of its decades-long planning and investment.

Protect the Health, Safety and Welfare of Adams County Inhabitants

Reasonable measures to ensure that the health, safety, and welfare of the inhabitants of Adams County will be protected, and to mitigate or minimize potential adverse impacts from the Project are included in the Environmental Impact Analysis sections of this report. Emergency vehicle access needs will be maintained, and construction activities coordinated with local fire departments, police departments, ambulance services, and other emergency responders as necessary. Thornton places a high priority on safety during construction. Contractors will be required to initiate, maintain, and supervise safety precautions and programs associated with their work, which will include using proper and safe equipment to complete the work. Contractors will be required to take necessary precautions for safety and provide necessary protection to prevent damage, injury, or loss. In its contract with the Project contractors, Thornton will require that the Project contractors comply with applicable laws and regulations.

Foster Regional Collaboration and Partnerships

Thornton and Adams County are negotiating an IGA in lieu of AASI permit application and review for the Project.

Reduce the Fiscal Impact of Growth

The Project will not impact the tax burden or fee structure for any government services except municipal water supply, and then only for those water customers that are within the service area of Thornton's water utility (primarily within the city limits of Thornton). Adams County residents that are located within Thornton's water utility's service area and that receive water service from Thornton are subject to rates and fees established by the Thornton City Council.

Promote Economic Vitality

Thornton has proactively planned for the anticipated population increase to ensure that Thornton can provide a reliable, high quality and economical water supply to meet the needs of its residents and businesses. Those future businesses will provide job opportunities for Adams County residents.

Preserve the County's Natural Resources

Impacts to natural resources will be minimal and temporary during construction. BMPs will be implemented during construction to minimize impacts to natural resources. The Project alignment was established to maximize use of utilize existing utility corridors in order to limit new utility impacts to the area. The work zone will be fenced to the limits of the permanent and temporary easements to limit the area of disturbance. Large trees will be marked to be protected as is feasible. Areas of disturbance will be restored to pre-construction conditions, including restoring to existing grades and re-vegetation with appropriate seed mixes. Other reasonable measures to ensure that the natural resources of Adams County will be preserved, and to mitigate or minimize potential adverse impacts from the Project are included in the Environmental Impact Analysis sections and Appendix I of this report.

Policies

The Adams County Comprehensive Plan includes countywide policies that relate to the goals listed above. Countywide policies that the Project is consistent with include the following:

Policy 2.1 Cooperate with Municipal Growth Area Goals

Thornton's municipal growth areas fall within unincorporated Adams County. Thornton has proactively planned for the anticipated population increase to ensure that Thornton can provide a reliable, high quality and economical water supply to meet the needs of its residents and businesses.

Policy 2.2 Coordinate Public Services and Infrastructure

Thornton has coordinated the location of the Project with Adams County staff. Thornton has coordinated the location of the Project with other utilities and a portion of the Project parallels the existing Xcel Energy powerline corridor.

Policy 2.3 Promote Regional Cooperation

Thornton and Adams County are negotiating an IGA in lieu of AASI permit application and review of the Project.

Policy 4.1 Focus on Job Creation

Thornton has proactively planned for the anticipated population increase to ensure that Thornton can provide a reliable, high quality and economical water supply to meet the needs of its residents and businesses. Those future businesses will provide job opportunities for Adams County residents.

Policy 4.2 Strengthen the Economic Base

Thornton has proactively planned for the anticipated population increase to ensure that Thornton can provide a reliable, high quality and economical water supply to meet the needs of its residents and businesses. Those future businesses will provide job opportunities for Adams County residents.

Policy 5.1 Encourage Growth in a Fiscally Responsible Manner

The Project will not impact the tax burden or fee structure for any government services except municipal water supply, and then only for those water customers that are within the service area of Thornton's water utility (primarily within the city limits of Thornton). Adams County residents that are located within Thornton's water utility's service area and that receive water service from Thornton are subject to rates and fees established by the Thornton City Council.

Policy 6.1 Ensure New Development Pays for Infrastructure Costs

The Project will not impact the tax burden or fee structure for any government services except municipal water supply, and then only for those water customers that are within the service area of Thornton's water utility (primarily within the city limits of Thornton). Adams County residents that are located within Thornton's water utility's service area and that receive water service from Thornton are subject to rates and fees established by the Thornton City Council.

Policy 7.5 Protect Water Supplies

The TWP is a domestic water delivery system that will convey water from the WSSC system that was purchased by the Thornton in the mid-1980s to enhance Thornton's water supply reliability and drought resiliency, help address source water quality issues, and meet municipal and industrial demands of Thornton's water customers through 2065.

The Project will not impact other water supplies within unincorporated Adams County. Thornton will coordinate the Project crossings of existing water supply infrastructure, including water pipelines and irrigation facilities. Thornton will obtain appropriate agreements for crossings before construction.

Policy 7.8 Minimize the Impacts of New Utility Infrastructure

Impacts from the Project will be minimal and temporary during construction. BMPs will be implemented during construction to minimize impacts. The Project alignment was established to maximize use of utilize existing utility corridors in order to limit new utility impacts to the area. The work zone will be fenced to the limits of the permanent and temporary easements to limit the area of disturbance. Large trees will be marked to be protected as is feasible. Areas of disturbance will be restored to pre-construction conditions, including restoring to existing grades and re-vegetation with appropriate seed mixes. Other reasonable measures to ensure that the natural resources of Adams County will be preserved, and to mitigate or minimize potential adverse impacts from the Project are included in the Environmental Impact Analysis sections and Appendix I of this report.

Adams County Hazard Mitigation Plan

The purpose of the Adams County Hazard Mitigation Plan, December 2020 is to reduce or eliminate long-term risk to people and property from disasters or hazard events. The Hazard Mitigation Plan lists risks of significance as high, medium, or low based on the significance they pose to Adams County. Of those listed, only three are applicable to the Project. Mitigation measures will be implemented, and impacts related to hazard events will be negligible.

Flood

The Project crosses four designated 100-year floodplains in unincorporated Adams County based on Federal Emergency Management Agency (FEMA) Flood Insurance Rate Map (FIRM) Panels for Adams County, Colorado and Incorporated Areas. These areas include:

- Brantner Gulch, Plan Station 308+49 to 312+70, FIRM Panel 08001CO317H
- Direct Flow Area 0054-1, Plan Station 578+40 to 585+26, FIRM Panel 08001CO318J
- Direct Flow Area 0054-1, Plan Station 587+90 to 596+15, FIRM Panel 08001CO318J
- Grange Hall Creek, Plan Station 612+00625+40, FIRM Panel 08001CO318J

Floodplain crossings in unincorporated Adams County are shown on the plans in Appendix E.

The Project will not alter floodplains. The water pipeline will be buried a minimum depth of 5 feet below grade. Work conducted within the floodplain areas will be restored to pre-construction conditions and grades. Therefore, the Project design will mitigate impacts on the hydraulics and hydrology of the floodplain. Thornton will obtain Floodplain Development permits and other approvals as required for floodplain crossings from Adams County or other agency as required after design has progressed. Information will be provided to Adams County as required to obtain permits.

Floodplain crossings will utilize open-cut construction in the floodplain. Spoils from trench excavations, construction-related equipment, materials, and supplies will be stored outside of the 100-year floodplain per local floodplain

regulations. Floodplain areas using open-cut construction will be restored to pre-construction grades and vegetation after construction.

Hazard Materials Incident

Construction, operation, and maintenance activities involving Thornton or the Project contractors bringing any hazardous materials onto the site will comply with applicable federal, state, and local laws and regulations regarding the handling, storage, disposal, transportation, and use of hazardous substances. In its contract with the Project contractors, Thornton will require that the Project contractors comply with applicable laws.

The Project includes the installation of a buried steel water pipeline, associated water pipeline appurtenances including precast vaults to house water pipeline control valves. The water pipeline will be installed with open-cut trench-type construction and some tunneled installations. Hazardous, toxic and explosive substances anticipated to be used, stored, and transported includes typical general infrastructure construction type materials including: fuels, lubricants, and hydraulic fluids to power and operate construction equipment and tools; cast-in-place concrete related materials such as form release agents and concrete curing compound; pipe tunneling drillings fluids; paints and solvents to paint miscellaneous smaller water pipeline appurtenances. There are no foreseeable impacts to the environment from the substances used for the construction of the Project.

Hazardous, toxic, and explosive substances are not anticipated to be used, stored, transported, disturbed or produced after Project construction is complete.

With respect to hazardous materials contamination that may be existing along the Project alignment, a site investigation within the Project Impact Area was conducted. An ERR of the Project Impact Area identified several oil and gas wells and/or operations AOCs for potential soil and/or groundwater contamination. Because contaminated soils and/or groundwater were identified within the Project Impact Area and given the associated concerns with worker health and safety, construction materials handling, liability, and scheduling implications on Project construction, further investigation was warranted on several of the AOCs. A report presenting the results of the site investigations is included in Appendix L. In total, four AOCs associated with the Project Impact Area were investigated between May through July 2021. The report in Appendix L presents the rationale for the AOC investigation, the methods and procedures used to investigate, sample, and collect data for each area, and the evaluation of the data with respect to the proposed construction.

For additional information including proposed mitigation measures that may be implemented on the Project, see Section AASI Application Checklist, 19 Environmental Impact Analysis, Hazardous Material Description.

Subsidence

A desktop study was conducted of the geologic conditions and natural hazards that may be present along the water Project alignment. The desktop study included review of soil, geologic conditions, and natural hazards including soil types (collapsible and potentially swelling/expansive soils), drainage areas, slopes, avalanche areas, debris fans, mud flows, rockslide areas, faults and fissures, seismic history, and wildfire hazard areas.

Natural hazards identified through the desktop study along the water Project alignment include collapsible and expansive (swelling) soils and bedrock and drainage areas. Based upon our review of available published geologic data, natural hazards due to steep unstable slopes, avalanche, debris fans, mud flows, rockslide, faults and fissures, seismicity, and wildfire hazard are deemed unlikely along the water Project alignment.

The Project alignment was overlain on a surficial geology map using the geology published on the *Generalized Surficial Geologic Map of the Denver Area, Colorado* (Chase and McConaghy, 1972) and is included in Appendix J. Geology along the water Project alignment consists primarily of loess, eolian sand, colluvium, sand silt, gravel, clay alluvium, sandstone, claystone, and siltstone bedrock.

Collapsible soils are defined as any unsaturated soil that goes through radical rearrangement of particles and greatly decreases in volume upon wetting, additional loading, or both. Soils with collapse potential are typically eolian, loessial, subaerial, colluvial, mudflow, and alluvial derived. Appendix J includes a figure illustrating where collapsible soils are mapped by the CGS, as shown by the yellow shaded areas labeled “Eolian (wind-blown) deposits”. The

CGS map identifies eolian (windblown) deposits in portions of the water Project alignment from 168th Avenue to 120th Avenue that could have the potential for collapse.

As part of the Project design, a geotechnical investigation was conducted along the pipeline alignment to identify and evaluate existing soils. The geotechnical investigation included geotechnical soil borings to a depth of 15 feet (approximately 5 feet below the bottom of the pipe), located at approximately 500 foot intervals along the proposed Project alignment. In addition, at proposed sites for pipeline tunnel installation, additional geotechnical investigation borings were conducted at each end of the proposed tunnel to a depth of approximately 35 feet, or deeper depending on the depth of the tunnel and findings in the field at the time of the geotechnical investigation. The findings from the geotechnical investigation and laboratory analysis, and engineering evaluation and recommendations are described in geotechnical design reports prepared for the Project by Kumar and Associates and Lithos Engineering (Kumar, 2021; Lithos, 2021). The design recommendations for the pipeline, open-cut trench and tunnel excavation, over excavation, pipeline bedding, trench backfill, and trench stabilization are incorporated into the Project design plans and specifications.

Adams County Open Space, Parks, and Trails Master Plan

The Adams County Open Space, Parks, and Trails Master Plan identifies guiding principles to support Adams County's over-arching understanding that the health of the natural environment, the strength of the community, and economic security are essential to Adams County's future. The Project complies with the following principles:

Natural Resource and Wildlife Habitat Protection

- ***Protect and enhance important ecological and scenic resources such as riparian areas, wetlands, floodplains, prairie grasslands and unique land forms.***
- ***Protect and enhance important and existing wildlife habitats and corridors, provide for species movement through the County.***

Impacts to riparian areas, wetlands, floodplains, prairie grasslands, and wildlife habitats will be minimal and temporary during construction. Mitigation measures will be implemented to minimize impacts. See Section AASI Application Checklist, 19 Environmental Impact Analysis and Appendix I for additional information.

Water Resources Protection and Enhancement

- ***Improve water quantity and quality to assure a continuing quality of life in Adams County by implementing stormwater management best practices to minimize runoff and encourage infiltration, protecting and enhancing wetland habitats and riparian zones.***
- ***Protect, in as natural a state as possible, floodplains and flood hazard areas for flood event conveyance and storage. Enhance these corridors with vegetation to reduce erosion and siltation.***
- ***Restore and enhance disturbed lands in and around river, creek and drainage corridors.***

Impacts to water resources will be minimal and temporary during construction. Required stormwater permits will be obtained from CDPHE and Adams County. A Stormwater Management Plan will be implemented in accordance with permit requirements. Project plans and specifications will contain erosion and sedimentation control plan guidance for the Project, and that will set the basis for the contractor's plan. BMPs will be implemented for stormwater management. Water resource areas, including floodplains, will be restored to preconstruction grades and vegetation. See Section AASI Application Checklist, 19 Environmental Impact Analysis and Appendix I for additional information.

Agricultural Conservation

- ***Preserve and protect the viability and character of high quality agricultural lands in the County.***

Criteria used for developing the Project location included minimizing impacts to agricultural uses. Property owners can continue to use the land within the easement area for purposes such as farming, grazing, or access, so long as such uses do not interfere with or endanger the operation of the Project. Agricultural use is compatible with operation of the Project because the water pipeline and fiber optic cable will be buried below the plow line.

Additional measures that will be implemented to minimize impacts to irrigated agricultural land include:

- Stripping and storing topsoil separately from excavated trench materials
- Seeding or leaving land fallow in accordance with the individual property owner's agreed-upon reclamation procedures following construction of the Project

Transportation Plan and Riverdale Road Corridor Plan

The Adams County Transportation Plan with included reference to the Riverdale Road Corridor Plan provides information on Adams County's goals and objectives for roadways within the Project corridor and specifically special objectives for the Riverdale Road corridor. Of the stated policies described in the Transportation plan and Riverdale Road Corridor Plan, the following are particularly applicable to the Project: minimizing new utilities within the Adams County road right-of-way; preservation of the current agricultural use along the Riverdale Road corridor while addressing future land use; preserving the rural character of Riverdale Road, providing for access control; and protection of the natural resources in the corridor. The following sections describe the Project approach to meeting these planning objectives.

The Project pipeline is located outside of Adams County right-of-way except for roadway crossings. With respect to the Riverdale Road Corridor Plan, the Project alternative alignment development and selection process criteria addressed Adams County's planning objective to maintain the scenic characteristics of the Riverdale Road corridor by lowering the ranking of alternative Project alignments located in the Riverdale Road corridor. The selected Project alignment avoids Riverdale Road except for one crossing of the road at 112th Avenue. No other section of the alignment encroaches on the Riverdale Road right-of-way. From the 112th Avenue crossing toward the south, the Project alignment parallels Riverdale Road for approximately 700 feet, located east of the Riverdale Road right-of-way within an easement through agricultural land.

The section of the Project that crosses current agricultural land has been developed such that there will no impacts to the current agricultural land use. The Project will also be compatible with future planned use as open space. These crossings of agricultural land occur from 112th Avenue to 104th Avenue. Much of this land is owned by Adams County and is leased for farming. It is noted that the Project alignment was reviewed by Adams County property managers during the project design development process and that all comments by the Adams County property managers have been incorporated into the design.

With respect to preserving the rural character of the Riverdale Road corridor, Project impacts will be limited to the construction phase. The Project is mitigating construction related impacts with property owners and lessees in accordance with permanent and temporary easements. Following construction, areas disturbed by the Project will be restored to pre-construction conditions. Future project related impacts will be limited with periodic operation and maintenance access to the Project site.

The Riverdale Road Corridor Plan also seeks to limit access points off of Riverdale Road to existing driveways. During the operation and maintenance of the Project, access to the Project alignment will be required by Thornton from Adams County roadways and Riverdale Road. Proposed points of access off of all Adams County roads are planned to utilize existing driveways as much as possible in accordance with County planning goals. Based on Project access needs and the location of existing driveways, there are limited number of additional proposed access points planned for the Project. Each of these proposed Project access points is identified in Appendix K for review by Adams County.

2.5.3 Impact on Land Use Patterns

Description of impacts and Net Effect that the project would have on land use patterns.

The Project is not anticipated to affect land use patterns in Adams County. While the installation of the Project will create temporary impacts during construction, the water pipeline will be buried underground, and disturbed surfaces will be restored to pre-construction conditions. Land use within and adjacent to the Project Impact Area are agricultural, residential, public/quasi-public, and municipal areas of Thornton. Uses or access within the easement can continue after construction so long as such uses do not interfere with or endanger the operation of the Project. In additional, all water pipeline components within agricultural farmed lands will be buried a minimum of 5 feet below the ground surface, so as not to have any conflicts with farm plows. There are some water pipeline appurtenances such

as access manholes, air and vacuum valve vaults, and some small diameter vent pipes that will have above grade components. These appurtenances will be located at the perimeter of farmed lands. In other areas they will be located with low profile features and will generally be painted with neutral colors.

2.5.4 Surrounding or Impacted Communities

Description of the surrounding and /or impacted community(ies).

The proposed Project alignment generally follows Quebec Street between 168th Avenue and 120th Avenue in Thornton and Adams County. In general, the Project alignment in areas north of approximately 138th Avenue crosses a mix of residential development and undeveloped properties. The undeveloped property use varies between native grass pastures to actively farmed agricultural land. The portion of the alignment between 138th Avenue and 120th Avenue is through areas that have largely been developed into single family residences, commercial businesses, and shopping centers. There is a significant amount of active residential and commercial land development ongoing along sections of alignment. Refer to Appendix D Figure 1 for the water pipeline alignment in this area.

The proposed Project alignment from just east of the intersection of 120th Avenue and Niagara Street follows a path south to southwest to the Wes Brown Water Treatment Plant located southwest of the intersection of East 88th Avenue and Colorado Boulevard. The Project alignment is generally in open space, rights of way, and actively farmed agricultural property. Refer to Appendix D Figure 2 for the water pipeline alignment in this area.

2.5.5 Surrounding or Impacted Cultural Resources

Description of the surrounding and/or impacted Cultural Resources.

ERO conducted a file search for the Segment A impact area in Adams County with the Office of Archaeology and Historic Preservation (OAHP). The OAHP provided file search results on September 8, 2021 (File Search No. 24007), and ERO conducted a review of the OAHP's online Compass database for pipeline alignments on September 15, 2021. The OAHP records indicate less than 5 percent of the Segment A Impact Area has been previously surveyed and that the Segment A Impact Area intersects the boundaries of four previously documented cultural resources. Of the previously documented resources, one is a precontact Native American open camp, two are historical structures, and one is a historic building. These resources are further described in the Description section below.

Description

The OAHP records identified 16 previously conducted cultural resource surveys in the Segment A Impact Area (Natural and Cultural Resources Assessment, Appendix C, Table C-1, located in Appendix I). Four of the previous surveys do not have Geographic Information System (GIS) data. Most of the previously documented surveys were completed in relationship to utility and transportation development projects more than 10 years ago. Approximately 5 percent of the Segment A impact area has been previously surveyed; this overlaps about 2 percent of the work limits. Previous surveys overlap about 20 acres of unincorporated Adams County property within the Segment A impact area (Figure 8.01-8.04 in Appendix I).

The file search identified four previously documented cultural resources in the Segment A Impact Area (ERO Report, Appendix C, Table C-2, located in Appendix I). The previously documented resources include a precontact Native American open camp (5AM40; needs data) as well as a historical trail (5AM130, field not eligible), building (5AM265; officially delisted), and Rullo/Roullo Ditch segment (5AM1867.1; officially not eligible). The historical trail (5AM130), residence (5AM265), and ditch (5AM1867.1) are destroyed. The open camp is located outside of the work limits. Only the no longer extant Rullo/Roullo Ditch intersected the proposed work limits.

In addition to a file search with the OAHP, review of existing literature, including historical maps, tax assessor records, and the Colorado Water Conservation Board's Colorado Decision Support Systems was performed, to determine if unevaluated cultural resources are located in the Segment A Impact Area. This review identified properties in the Segment A Impact Area that may contain cultural resources 50 years old or older (i.e., constructed prior to 1970) (Natural and Cultural Resources Assessment, Appendix C, Table C-3), located in Appendix I). The majority of these resources are historical rural or agricultural properties and irrigation-related landscape features.

Impacts

The Segment A has little or no potential to result in any adverse effects on known sites, structures, or buildings that are currently considered historic properties (i.e., cultural resources that are eligible, needs data, or listed in the State or National Register of Historic Places). All four previously documented resources are either destroyed or do not intersect the proposed work limits. No previously documented resources overlap unincorporated Adams County property.

Compliance with Section 106 (54 United States Code [U.S.C.] § 306108) of the National Historic Preservation Act (54 U.S.C. § 300101 et seq.) or the Colorado State Historic Act (C.R.S. 24-80) is necessary only when state or federal permits, funding, or lands are involved. For instance, if a drainage, canal, or ditch is determined jurisdictional and the project requires a Clean Water Act (CWA) Section 404 permit the USACE may require a pedestrian survey and State Historic Preservation Officer consultation for the permitted area, associated construction limits, and potentially a 100-foot buffer. If a historical ditch or canal requires a CWA Section 404 permit the effects on the ditch would have to be assessed and consulted on through formal documentation. Open trench construction across a canal or ditch, however, would not necessarily result in an adverse effect, provided that the ditch is returned to preconstruction contours. The USACE has determined that additional survey as part of the Nationwide Permitting will not be required.

Additional information is provided in Appendix I – Natural and Cultural Resources Assessment.

2.5.6 Existing or Unique Agricultural Land

Description of existing and unique agricultural land in the area.

Criteria used for developing the Project location included minimizing impacts to agricultural uses. Property owners can continue to use the land within the easement area for purposes such as farming, grazing, or access, so long as such uses do not interfere with or endanger the operation of the Project. Agricultural use is compatible with operation of the Project because the water pipeline and fiber optic cable will be buried below the plow line.

Additional measures that will be implemented to minimize impacts to irrigated agricultural land include:

- Stripping and storing topsoil separately from excavated trench material
- Seeding or leaving land fallow in accordance with the individual property owner's agreed-upon reclamation procedures following construction of the water pipeline

Aerial mapping presented in Figure 1 and Figure 2 in Appendix D illustrates the type of land use and infrastructure development on each parcel crossed by the Project as of mid-2019. The parcel identification information crossed by the Project are presented on Figure 5 and Figure 6 in Appendix D. Table 5 provides identification of associated land use for those parcels. Land use within and adjacent to the Project Impact Area are agricultural, residential, public/quasi-public, and municipal areas of Thornton. As defined by Adams County the Project Impact Area addressed in this report are those geographic areas, including the development area, within 500 feet of the Project. Parcels that are currently platted or planned for future residential development are described in Table 5.

Table 6 presents the soil units crossed by the Project that are defined as Prime Farmland (if irrigated) by the United States Department of Agricultural (USDA), Natural Resources Conservation Service. Prime farmland, as defined by the USDA, CFR 657, is land that has the best combination of physical and chemical characteristics for producing food, feed, forage, fiber, and oilseed crops, and is also available for these uses (the land could be cropland, pastureland, rangeland, forest land, or other land, but not urban built-up land or water). It has the soil quality, growing season, and moisture supply needed to economically produce sustained high yields of crops when treated and managed, including water management, according to acceptable farming methods. In general, prime farmlands have an adequate and dependable water supply from precipitation or irrigation, a favorable temperature and growing season, acceptable acidity or alkalinity, acceptable salt and sodium content, and few or no rocks. They are permeable to water and air. Prime farmlands are not excessively erodible or saturated with water for a long period of time, and they either do not flood frequently or are protected from flooding. No Unique Farmland, defined as being used for special crops per the USDA, is crossed by the Project.

Table 6. Prime Farmland Soils Crossed by the Project

Soil Unit Map Symbol	Soil Name	Prime Farmland Classification
NuA	Nunn clay loam, 0 to 1 percent slopes	Prime farmland, if irrigated
NuB	Nunn clay loam, 1 to 3 percent slopes	Prime farmland, if irrigated
PlB	Platner loam, 0 to 3 percent slopes	Prime farmland, if irrigated
PlC	Platner loam, 3 to 5 percent slopes	Prime farmland, if irrigated
UlC	Ulm loam, 3 to 5 percent slopes	Prime farmland, if irrigated

Source: https://websoilsurvey.sc.egov.usda.gov/App/WebSoilSurvey.aspx

A summary of unincorporated Adams County parcels identified with prime farmland type soils that are not developed with residential or commercial development that are crossed by the Project are presented below. Based on the current land uses on these properties and the associated lack of irrigation, a majority of the unincorporated Adams County parcels are not classified as Prime Farmland per USDA criteria.

The use of the property for agricultural purposes will not be impacted by the Project. Property owners can use the land within the easement area for purposes such as farming, grazing, or access, so long as such uses do not interfere with or endanger the operation of the Project. Agricultural use is compatible with operation of the Project because the water pipeline and fiber optic cable will be buried below the plow line. Parcels Project alignment are listed below from north to south and correspond to the parcel map identification number on Figures 5 and 6 in Appendix D.

- **Parcel 1 –** Mixture of UIC, and PIB soil types; owned by ERN; land currently accommodates oil and gas facilities and grazing activities. Not irrigated and therefore not Prime Farmland.
- **Parcel 3 –** Mixture of UIC, PIB and PIC soil types; owned by Quebec 7; Property is platted for a residential subdivision. The Project is proposed to be located within the future planned Thornton Quebec Street right-of-way.
- **Parcel 9 –** Mixture of PIB and UIC soil types; owned by Clear Channel Broadcasting; land accommodates broadcasting antenna towers and a buried gas line; platted for future subdivision. Not irrigated and therefore not Prime Farmland.
- **Parcel 10 –** Mixture of PIB and UIC soil types; owned by Robin McIntosh; land contains nonnative upland vegetation and a prairie dog colony and does not appear to be used for agriculture. Not irrigated and therefore not Prime Farmland.
- **Parcel 11** – Mixture of NuB and UIC soil types; owned by Richard H. and Juanita M. Larson; land is used for agriculture. Irrigated and therefore Prime Farmland.
- **Parcel 12** – Mixture of NuA and NuB soil types; owned by Adams County Board of County Commissioners; Land is used for agriculture. Irrigated and therefor Prime Farmland.
- **Parcel 13** – Mixture of NuA and NuB soil types; owned by Adams County Parks; land is used for agriculture. Irrigated and therefore Prime Farmland.
- **Parcel 14** – Mixture of NuA and NuB soil types; owned by Adams County; land is used for agriculture. Irrigated and therefore Prime Farmland.
- **Parcel 15 –** Mixture of NuB and NuA soil types; owned by Mike Leon; land is used for agriculture. Irrigated and therefore Prime Farmland.
- **Parcel 16, 17, and 19 –** Mixture of NuA and NuB soil types, and non-Prime Farmland soil types; owned by Public Service Company of Colorado; land accommodates a transmission tower and land is used for open space. Not irrigated and therefore not Prime Farmland.

2.6 Local Government Services (Section 6-07-02-07)

Adams County waived the submittal requirements under this topic per a March 17, 2021 email from Layla Bajelan, Adams County, included in Appendix A.

Description of existing capacity of and demand for local government services including roads, schools, water and wastewater treatment, water supply, emergency services, transportation, infrastructure, housing, law enforcement, and other services necessary to accommodate Development.

Description of the impacts and Net Effect of the Project on the demand for local government services and the capability of local governments to provide services.

Description of the potential effect on the existing transportation network including, but not limited to: road hierarchy, circulation system, road connections, right-of-way dedications, conformance with Adams County engineering standards, road access, alignment of roads, intersections,sidewalks and trails, pedestrian access, parks and open space.

2.7 Financial Burden on County Residents (Section 6-07-02-08)

Thornton requested a variance on these topics as follows:

> Thornton requests that Adams County waive this submittal requirement. The Project will not impact the tax burden or fee structure for any government services except municipal water supply, and then only for those water customers that are within the service area of Thornton's water utility (primarily within the city limits of Thornton). Adams County residents that are located within Thornton's water utility's service area and that receive water service from Thornton are subject to rates and fees established by the Thornton City Council.

Adams County response:

> Adams County will waive this requirement, as the only residents that will be financially impacted by this project are within the City of Thornton water utility service area and are already subject to the fees and rates of the Council. The pipeline itself will not impact taxes or rates on citizen in unincorporated areas.

Description of the existing tax burden and fee structure for local government services, including but not limited to assessed valuation, mill levy, rates for water and wastewater treatment, and costs of water supply.

Description of impacts and Net Effect of the Project on existing tax burden and fee structure for government services applicable to County residents and property owners.

2.8 Local Economy (Section 6-07-02-09)

Adams County waived the submittal requirements under this topic per a March 17, 2021 email from Layla Bajelan, Adams County, included in Appendix A.

Description of the local economy including but not limited to revenues generated by the different economic sectors, and the value or productivity ofdifferent lands.

Description of impacts and Net Effect of the Project on the local economy and opportunities for economic diversification, including the number and types of jobs created.

Description of jobs created as a result of the Project.

Description of income potential from jobs created by or as a result of the Proposed Project.

2.9 Recreational Opportunities (Section 6-07-02-10)

Adams County waived the submittal requirements under this topic per a March 17, 2021 email from Layla Bajelan, Adams County, included in Appendix A.

Description of present and potential recreational uses, including the number of recreational visitor days for different recreational uses and the revenue generated by types of recreational uses.

Map depicting the location of recreational uses such as fishery stream segments, access points to recreational resources, and hiking and biking trails.

Description of the impacts and Net Effect of the Project on present and potential recreational opportunities and revenues to the local economy derived from those uses.

2.10 Environmental Impact Analysis (Section 6-07-02-11)

The following is a non-exclusive list of items the Applicant shall submit for review by the Community and Economic Development Department and other referral agencies.

Description of the existing natural environment and an analysis of the impacts of the project to the natural environment.

Descriptions in this section shall be limited to the Impact Area, and shall include an analysis of existing conditions, supported with data, and a projection of the impacts of the project in comparison to existing conditions.

The Project is a low-impact, passive use that is consistent with existing and planned land uses. The Project is not anticipated to impact the environment once the Project is installed. Effects on the environment will be temporary during construction and are anticipated to be negligible after construction.

A detailed environmental assessment is included in the Natural and Cultural Resources Assessment – Segment A Adams County, Colorado in Appendix I.

The analysis shall include a description of how the Applicant shall comply with the Applicable Approval Criteria in Section 6-17.

Table 7 provides a listing the General Approval Criteria from Section 6-17-01 and a description of the compliance response.

The following sub-sections of the Environmental Impact Analysis are presented at the summary heading level, followed by Thornton's response.

2.10.1 Air Quality

Description of the air sheds to be affected by the Project, including the seasonal pattern of air circulation and microclimates.

Impacts to air quality are expected to be negligible.

Map and description of the ambient air quality and State air quality standards of the air sheds to be affected by the Project, including particulate matter and aerosols, oxides, hydrocarbons, oxidants and other chemicals, temperature effects and atmospheric interactions.

Impacts to air quality are expected to be negligible.

Descriptions of the impacts and net effect that the Project would have on air quality during both construction and operation under both average and worst-case conditions.

The Project would create temporary impacts during construction from ground disturbing activities and emissions from vehicles and equipment. Construction for the Project is anticipated to last for 20 months from June 2022 to February 2024.

An air permit is required for construction projects that are greater than 25 acres and/or extend longer than 6 months duration from the CDPHE Air Pollution Control Division. The Project contractors will, submit an APEN and will obtain a permit from CDPHE before construction activities in accordance with state air quality regulations. The Project construction contractor will implement standard industry BMP for dust abatement and abide by required permit conditions issued by the CDPHE Air Pollution Control Division.

Construction activities, such as vehicles driven over cleared ground, general disturbance to vegetated areas, or soil stockpiles susceptible to winds, can cause fugitive dust. During construction, dust control measures will be implemented. Examples of these mitigation measures that may be used on the Project include:

- Speed limits for construction vehicles within the work area.
- Water application to disturbed areas, dirt access roads, and stockpiles.
- Erosion control techniques and BMP.
- Revegetation of disturbed areas where appropriate following construction activities.

Water will be used as needed for dust suppression during construction. Water sources could be nearby fire hydrants, water pipelines, and water trucks. Water may be purchased from local water providers for construction activities. Due to the temporary nature of the impacts and because they will be mitigated by implementing BMP and permit requirements, it is not anticipated that the Project will further degrade or create a negative net effect to air quality conditions in Adams County.

There will be no impact to air quality after construction.

2.10.2 Visual Quality

Map and description of ground cover and vegetation, tree canopies, waterfalls and streams or other natural features.

Description of view sheds, scenic vistas, unique landscapes or land formations.

Map and description of buildings, structure design and materials to be used for the Project. Include elevations of proposed buildings and other structures.

Descriptions of the impacts and Net Effect that the Project would have on visual quality.

The following Thornton variance request and Adams County response is documented in an Adams County Memorandum, dated April 22, 2021, from Layla Bajelan, included in Appendix A.

Thornton requested a variance as follows:

> Thornton requests that Adams County waive this submittal requirement. The pipeline will be buried, and visual impacts during construction will be temporary.

Adams County response:

> Adams County will require the applicant to demonstrate that the visual impacts of the Project construction will be addressed during construction of the pipeline.

Temporary visual impacts that may occur during construction include fugitive dust, construction debris, and tracking of debris and mud on streets; evidence of construction process including staging of pipeline, and structures, earthwork and import material stockpiles, construction equipment and construction vehicle parking. The construction contractor will be required to control fugitive dust from the construction site primarily through the use of water spray when conditions are dry and in accordance with permit requirements. The construction contractor will be required to use and maintain vehicle tracking pads to mitigate tracking mud on public streets in accordance with permit requirements. Thornton will have oversight representatives on site to monitor that mitigation measures are in place to control construction-related visual impacts. Other mitigation measures include the following:

- Construction and silt fencing will be utilized to minimize disturbance to surrounding areas.
- Existing trees and vegetation will be preserved to the extent practicable.
- Disturbed areas will be revegetated using native species as soon as practicable following construction.
- Long term staging and storage of materials in areas approved by Thornton.

Visual impacts of the completed Project will be negligible, as the water pipeline will be buried underground and any above grade appurtenances, such as, vent pipes and electrical equipment cabinets will be low profile and/or painted with colors to match the adjacent environment. Details of these facilities are included in the Project plans

(Appendix E). Upon completion of construction, areas impacted by construction will be restored to pre-construction conditions with native seeding and sod, as applicable.

2.10.3 Surface Water Quality

Map and description of all surface waters, including applicable State water quality standards, to be affected by the project.

Map and descriptions of surface waters within the Project Impact Area are included in Appendix I.

Descriptions of the immediate and long-term impact and Net Effects that the Project would have on the quantity and quality of surface water under both average and worst case conditions.

The Project will have no impact on the quantity of surface water. In general, following construction, historic flow patterns will be maintained, and the land will drain in the same manner and at generally the same rate as it did before construction.

Impacts on surface water are not anticipated after construction.

Construction Stormwater General Permits from CDPHE and Adams County Stormwater Quality and Clearing and Grading Permits will be required for the Project and will include requirements for control of stormwater runoff and groundwater discharged into drains or waterways from construction areas and activities. The construction contractor will obtain required permits and will implement a Stormwater Management Plan for their planned work activities in accordance with CDPHE and the Municipal Separate Storm Sewer System (MS4) requirements associated with Adams County and Thornton. Project plans and specifications will contain erosion and sedimentation control plan guidance for the Project, and that will set the basis for the contractor's plan.

BMP will be implemented for stormwater management. Surface drainage stormwater BMP will include application of erosion control techniques and the successful revegetation of disturbed areas that will be used to protect surface hydrology and water quality. Excavated material or other construction materials will not be stockpiled or deposited near or on stream banks or other watercourse perimeters where they could be washed away by high water or storm runoff, or could encroach upon stream banks.

Construction wastewater associated with the potential dewatering of trenches will be handled in accordance with CDPHE permit discharge requirements. Before construction, Thornton and/or the Project contractors will obtain a General Permit for Construction Dewatering Activities from CDPHE and specify the management measures to capture and manage any generated discharge. BMPs will also be deployed for construction dewatering activities, pursuant to the Construction Stormwater Discharge Permit and/or the Construction Dewatering Discharge Permit as appropriate for the site conditions and soil erodibility, to protect the quality of surface water during construction of the Project.

The Project water pipeline will be hydrostatically tested prior to operation start up. Before discharge of hydrostatic test water from the water pipeline, Thornton and/or the Project contractor will obtain a General Permit for Discharges from Hydrostatic Testing of Pipelines, Tanks, and Similar Vessels from CDPHE. Sampling and effluent limits will be in accordance with permit requirements.

With the implementation of BMPs and other measures required to meet applicable permit requirements, the Project will have negligible impacts on surface water during construction.

Descriptions of the immediate and long-term impacts and Net Effects that the project would have on the meandering characteristics and limits of the streambed under both average and worst case conditions.

Temporary impacts as a result of implementing open cut construction methods across drainages and streams will occur during construction. Temporary diversion of stream flows around the water pipeline location will be required to accommodate construction for water crossings; however, stream flows will be maintained. This work would be accomplished under a USACE Nationwide Permit. Grades will be returned to preconstruction contours and in general, following construction, historic flow patterns will be maintained, and the land will drain in the same manner and at generally the same rate as it did before construction. Work will be scheduled to avoid high streamflows.

Long-term impacts on the meandering characteristics and limits of the streambed are not anticipated after construction.

2.10.4 Groundwater Quality and Quantity

Map and description of all groundwater, including any and all aquifers that are affected by the Proposed Project.

Impacts to groundwater will be mitigated and affects to aquifers are not anticipated. Temporary construction activities and dewatering in areas of streams and shallow alluvial aquifers may have a localized effect during construction; however, the Project is unlikely to have any long-term adverse effects on aquifer recharge areas.

The geotechnical investigation program for the water pipeline design included soil borings located along the water pipeline at an approximate spacing of 500 feet and also at each end of the proposed tunnel locations. The presence of groundwater and groundwater depth was noted on the drilling logs at the time of the geotechnical drilling investigation. Piezometers were installed at most tunnel boring sites to monitor groundwater levels a few days after the drilling and periodically thereafter.

Groundwater was encountered while drilling in 9 of the 25 open-cut borings at depths ranging from 4 to 14 feet below the ground surface. (Kumar, 2021). Fluctuations in the groundwater levels may occur due to variations in the water level of nearby drainages, precipitation, seasonal moisture variations, temperature, changes in type of land development, and other factors not evident at the time that groundwater measurements were taken.

Mitigation measures that will be implemented to minimize impacts to groundwater include the following:

- The water pipeline design includes installation of low permeability cut-off walls at approximately 1,000 foot spacing to reduce movement of groundwater along the water pipeline.
- Compacting backfill material and soil disturbed during trenching. Compact with a backhoe, vibration machine, rollers, or other equipment. Compaction requirements and testing would be specified in accordance with standards of practice.

2.10.5 Wetlands and Riparian Areas

Map and description of all floodplains, wetlands, and riparian areas to be affected by the project, including a description of each type of wetlands, species composition, and biomass.

The Project crosses four designated 100-year floodplains in unincorporated Adams County based on Federal Emergency Management Agency (FEMA) Flood Insurance Rate Map (FIRM) Panels for Adams County, Colorado and Incorporated Areas. These areas include:

- Brantner Gulch, Plan Station 308+49 to 312+70, FIRM Panel 08001CO317H
- Direct Flow Area 0054-1, Plan Station 578+40 to 585+26, FIRM Panel 08001CO318J
- Direct Flow Area 0054-1, Plan Station 587+90 to 596+15, FIRM Panel 08001CO318J
- Grange Hall Creek, Plan Station 612+00625+40, FIRM Panel 08001CO318J

Floodplain crossings in unincorporated Adams County are shown on the plans in Appendix E.

Twenty two (22) potential waters of the United States (10 wetlands, 8 open water areas and 7 ditches and canals) were mapped in the Project Impact Area. A total of about 7.02 acres of potential wetlands and 19.05 acres of potential other waters of the United States (16.28 acres of open water areas and 2.77 acres of ditches and canals) were mapped inside the Project Impact Area, including within the work limits. Typically, the Project will require a 50-foot permanent easement for the water pipeline and an additional 40-foot temporary easement for construction. Work limits include the permanent easement and temporary construction easement. Exclusively inside the work limits in unincorporated Adams County, about 0.34 acre of potential wetlands and 0.09 acre of potential other waters of the United States (0.01 acre of open water areas and 0.08 acre of ditches and canals) were mapped. The potential waters of the United States include wetlands, intermittent streams, depressional areas, ponds, reservoirs, and ditches. Project impacts to jurisdictional waters of the U.S. will be controlled based on USACE Nationwide Permit

requirements and/or will not be impacted by the Project if avoided by using tunneling methods to construct the water pipeline. Refer to Appendix I for additional details and maps.

Description of the source of water interacting with the surface systems to create each wetland (i.e., side-slope runoff, over-bank flooding, groundwater seepage, etc.).

Appendix I includes information on the source water interacting with surface systems to create each wetland.

Description of the impacts and Net Effect that the Project would have on the floodplains, delineated flood hazard zone(s), wetlands and riparian areas.

Impacts to flood hazard zones, wetlands, and riparian areas are negligible and are temporary during construction. Disturbed areas will be restored to pre-construction grades and revegetated where appropriate after construction. BMPs will be implemented to protect surrounding areas from stormwater runoff and erosion. Information and maps on wetlands and riparian areas are found in Appendix I.

The Project crosses three designated 100-year floodplains in unincorporated Adams County as shown on drawings in Appendix E.

The Project will not alter floodplains. The water pipeline will be buried a minimum depth of 5 feet below grade. Work conducted within the floodplain areas will be restored to pre-construction conditions and grades. Therefore, the Project will mitigate impacts on the hydraulics and hydrology of the floodplain. Thornton will obtain Floodplain Development permits and other approvals as required for floodplain crossings from Adams County or other agency as required after design has progressed. Information will be provided to Adams County as required to obtain permits.

Floodplain crossings will utilize open-cut construction in the floodplain. Spoils from trench excavations, construction-related equipment, materials, and supplies will be stored outside of the 100-year floodplain per local floodplain regulations. Floodplain areas using open-cut construction will be restored to pre-construction grades and vegetation after construction.

2.10.6 Terrestrial and Aquatic Animals and Habitat

Map and description of terrestrial and aquatic animals including the status and relative importance of game and non-game wildlife, livestock and other animals.

The Project Impact Area does not contain habitat for any federally listed threatened, endangered, or candidate species. Suitable habitat is present for several state listed species including common garter snake, black-tailed prairie dog, bald eagle, burrowing owl, and ferruginous hawk. Three raptor nests have been identified within or near the Project Impact Area, and the Project Impact Area contains habitat for a variety of migratory birds. Mule deer, white-tailed deer, wild turkey, and Canada geese also are likely to occur within the Project Impact Area. See Appendix I for additional details and maps. The ERN parcel, shown as Parcel 1 on Figure 5 in Appendix D, located east of Quebec Street between 168th Avenue and 160th Avenue is currently used for grazing.

A description of stream flows and lake levels needed to protect the aquatic environment.

The Project will not impact lake levels. Temporary impacts as a result of implementing open cut construction methods across drainages and streams will occur during construction. Temporary diversion of stream flows around the water pipeline location will be required to accommodate construction for water crossings; however, stream flows will be maintained. This work would be accomplished under a USACE Nationwide Permit. Grades would be returned to preconstruction contours and in general, following construction, historic flow patterns will be maintained, and the land will drain in the same manner and at generally the same rate as it did before construction.

Description of threatened or endangered animal species and their habitat.

The Project Impact Area does not contain habitat for any federally listed threatened, endangered, or candidate species. Suitable habitat is present for several state listed species including common garter snake, black-tailed prairie dog, bald eagle, burrowing owl, and ferruginous hawk. See Appendix I for additional details and maps.

Map and description of critical wildlife habitat and livestock range to be affected by the project including migration routes, calving areas, summer and winter range, and spawning beds.

Map and description of wildlife habitat is included in Appendix I.

The only parcel currently used for livestock grazing is Parcel 1, shown on Figure 5 in Appendix D. The Project easements across this parcel will address livestock grazing requirements with temporary fencing in accordance with easement terms.

Description of the impacts and Net Effect that the Project would have on terrestrial and aquatic animals, habitat and food chain.

No suitable habitat exists in the Project Impact Area for any federally listed threatened, endangered, or candidate wildlife species. The Project will have no impact or net effect on those species. Suitable habitat exists for several state listed species and a site assessment will be conducted just prior to construction. CPW guidelines will be followed during construction to minimize impacts. Impacts to other wildlife will be minimal during construction. All temporarily disturbed areas would be returned to preconstruction grades and seeded with native vegetation, or as reasonably specified by the property owner, once construction is complete. Long-term impacts to wildlife are not anticipated. See Appendix I for additional information.

2.10.7 Terrestrial and Aquatic Plant Life

Map and description of terrestrial and aquatic plant life including the type and density, and threatened or endangered plant species and habitat.

Six broad vegetation communities were identified in the Project Impact Area. These vegetation communities include mixed upland, nonnative upland, riparian, wetlands, agricultural lands, and developed/disturbed areas.

No federally listed plant species are likely to be present in the Project Impact Area. Colorado has no state statute protecting rare plants, and therefore no list of state threatened and endangered plant species. Potentially suitable habitat for the Colorado butterfly plant, a species listed by the Colorado Natural Heritage Program as rare or imperiled, is present in the Project Impact Area, but Project construction is unlikely to have an adverse effect on the species. the Project does not cross any designated critical habitat for the Colorado butterfly plant. See Appendix I for additional details and maps.

Descriptions of the impacts and Net Effect that the Project would have on terrestrial and aquatic plant life.

All temporarily disturbed areas would be returned to preconstruction grades and seeded with native vegetation, or as reasonably specified by the property owner, once construction is complete. Certified weed-free seed mix consisting of drought-tolerant native grasses and other types of vegetation as appropriate to meet property owner's reasonable preferences will be implemented for the revegetation of disturbed areas. BMPs will be implemented during construction to minimize impacts. These BMPs could include installing temporary fencing to deter access to sensitive areas, placing staging areas in previously disturbed upland areas, and installing sediment- and erosion-control devices to minimize surface runoff in disturbed areas. Because most of the impacts on vegetation would be temporary, there would be no long-term adverse effects on vegetation.

Noxious weeds within the Project work limits will be controlled using the Integrated Pest Management methods as described by the Colorado Department of Agriculture. Those methods have been developed to control noxious weeds in a manner that prevents harm to human health and to environmentally sensitive areas such as waterways and desirable vegetation including native trees.

2.10.8 Soils, Geologic Conditions and Natural Hazards

Map and description of soil, geologic conditions, and Natural Hazards including but not limited to soil types, drainage areas, slopes, avalanche areas, debris fans, mud flows, rockslide areas, faults and fissures, seismic history, and wildfire hazard areas.

A desktop study was conducted of the geologic conditions and natural hazards that may be present along the Project alignment. The desktop study included review of soil, geologic conditions, and natural hazards including soil types

(collapsible and potentially swelling/expansive soils), drainage areas, slopes, avalanche areas, debris fans, mud flows, rockslide areas, faults and fissures, seismic history, and wildfire hazard areas.

The proposed Project alignment generally follows Quebec Street between East 168th Avenue and East 156th Avenue in Thornton and Adams County, Colorado. In general, the Project alignment in areas north of approximately East 138th Avenue is in undeveloped properties that vary between native grass pastures to actively farmed agricultural land. Existing ground surface grades along the alignment are generally gently to moderately sloping with elevations generally ranging between approximately 5,080 and 5,296 feet (as provided by the Google Earth software package).

The Project alignment beginning near the intersection of East 120th Avenue and Niagara Street follows a path south to southwest to the Wes Brown Water Treatment Plant located southwest of the intersection of East 88th Avenue and Colorado Boulevard. The Project alignment is generally in open space, rights of way, and actively farmed agricultural property. The Project will cross several roadways and drainages along this reach of the alignment. Existing ground surface grades along the Project alignment are generally gently to moderately sloping with elevations generally ranging between approximately 5060 and 5170 feet (as provided by the Google Earth software package) (Kumar, 2021).

Natural hazards identified through the desktop study along the Project alignment include collapsible and expansive (swelling) soils and bedrock and drainage areas. Based upon the review of available published geologic data, natural hazards due to steep unstable slopes, avalanche, debris fans, mud flows, rockslide, faults and fissures, seismicity, and wildfire hazard are deemed unlikely along the water Project alignment.

The Project alignment was overlain on a surficial geology map using the geology published on the *Generalized Surficial Geologic Map of the Denver Area, Colorado* (Chase and McConaghy, 1972) and is included in Appendix J. Geology along the Project alignment consists primarily of loess, eolian sand, colluvium, sand silt, gravel, clay alluvium, sandstone, claystone, and siltstone bedrock.

Collapsible soils are defined as any unsaturated soil that goes through radical rearrangement of particles and greatly decreases in volume upon wetting, additional loading, or both. Soils with collapse potential are typically eolian, loessial, subaerial, colluvial, mudflow, and alluvial derived. Appendix J includes a figure illustrating where collapsible soils are mapped by the CGS, as shown by the yellow shaded areas labeled “Eolian (wind-blown) deposits”. The CGS map identifies eolian (windblown) deposits in portions of the Project alignment primarily from East 168th Avenue to East 120th Avenue that could have the potential for collapse. (Kumar, 2021; Lithos, 2021).

Expansive soils and rock contain a high percentage of certain kinds of clay particles that are capable of absorbing large quantities of water. Soil volume may expand 10 percent or more as the clay becomes wet. The powerful force of expansion is capable of exerting pressures of 20,000 pounds per square foot or greater on foundations, slabs, or other confining structures. Subsurface expansive soils in Colorado tend to remain at a constant moisture content in their natural state and are usually relatively dry at the outset of the disturbance that construction causes on them. Exposure to natural or human-sourced water during or after construction results in expansion. In many instances, the soils do not regain their original dryness after construction but remain somewhat moist and expanded due to the changed environment. This pushing apart, or expansion, occurs throughout the mass of soil that is being wetted and causes increased volume and significant expansive pressures within the mass. The opposite effect, called shrinkage, may occur if a previously wet expansive clay is dried. Although no large positive pressures are exerted, shrinkage will cause a volume decrease of the soil mass. These processes of expansion and shrinkage may occur any number of times for a single soil mass. Appendix J includes a figure illustrating where potentially swelling soils and rock are mapped by the CGS. The potential for swelling soils and rock along the Project alignment varies from moderate to very high, primarily from East 168th Avenue to East 120th Avenue. The majority of the Project alignment from East 120th Avenue south to East 88th Avenue is mapped as low swell potential.

As part of the Project design, a geotechnical investigation was conducted along the pipeline alignment to identify and evaluate existing soils. The geotechnical investigation included geotechnical soil borings to a depth of 15 feet (approximately 5 feet below the bottom of the pipe), located at approximately 500 foot intervals along the proposed Project alignment. In addition, at proposed sites for pipeline tunnel installation, additional geotechnical investigation borings were conducted at each end of the proposed tunnel to a depth of approximately 35 feet, or deeper depending on the depth of the tunnel and findings in the field at the time of the geotechnical investigation. The findings from the geotechnical investigation and laboratory analysis, and engineering evaluation and recommendations are described

in geotechnical design reports prepared for the Project by Kumar and Associates and Lithos Engineering (Kumar, 2021; Lithos, 2021). The design recommendations for the pipeline, open-cut trench and tunnel excavation, over excavation, pipeline bedding, trench backfill, and trench stabilization are incorporated into the Project design plans and specifications.

The Project alignment crosses several drainage and potential wetland areas, as identified in Appendix I. The groundwater is likely shallow in these areas. (Lithos, 2021).

Descriptions of the risks to the Project from Natural Hazards.

Natural hazards identified through the desktop study along the Project alignment include collapsible and expansive (swelling) soils and bedrock and drainage areas. Based upon the review of available published geologic data, natural hazards due to steep unstable slopes, avalanche, debris fans, mud flows, rockslide, faults and fissures, seismicity, and wildfire hazard are deemed unlikely along the Project alignment.

Design requirements for the Project will be addressed based on findings of the geotechnical investigation conducted along the alignment and recommendations contained in the Project engineering geotechnical design reports. Mitigation measures will be implemented to protect the Project from natural hazards. Mitigation measures will be further refined during design to meet site-specific geological hazards.

Descriptions of the impact and net effect of the project on soil and geologic conditions in the area, and their effects on streambed meander limits and aquifer recharge areas.

Impacts on soil will be temporary during construction. BMPs implemented during construction will include application of erosion control techniques and the successful revegetation of disturbed areas. BMPs will be maintained and inspected. Failed BMPs will be replaced as required. After work is complete and final stabilization has been achieved, temporary BMPs will be removed. In areas with sandy soils and increased sloughing, potential mitigation measures may include, but are not limited to, the following:

- Revegetation
- Soil erosion blankets during construction

The Project is unlikely to have an adverse effect on the soil and geologic conditions in the area. Temporary construction activities and dewatering in areas of streams and shallow alluvial aquifers may have a localized effect during construction; however, the Project is unlikely to have any long-term adverse effects on streambed meander limits and aquifer recharge areas. Areas disturbed for construction of the Project will be restored to pre-construction grades and revegetated to pre-construction vegetation where appropriate after construction.

2.10.9 Nuisances

Descriptions and maps showing the range of noise, glare, dust, fumes, vibration, and odor levels caused by the Project, along with an indication of their significance.

After construction is complete, there are no anticipated nuisances caused by the Project. During the construction phase there will be unavoidable minor nuisances that are typical for construction projects. These nuisances will be short-term in nature. Thornton intends to mitigate these construction-related disturbances through the use of BMPs, in accordance with permits and federal, state, and local regulations.

Installation of the Project will create temporary noise impacts during construction. Noise impacts are anticipated to be minor in the context of the urbanized corridor where Project installation would occur. During the construction of the Project, contractors will be required to comply with Adams County's then-existing maximum permissible noise levels. After construction is complete, no noises related to the Project operation are anticipated in unincorporated Adams County.

There is no anticipated glare nuisance caused by the Project.

An air permit from the CDPHE Air Pollution Control Division is required for construction projects that are greater than 25 acres and/or extend longer than 6 months duration. Project construction contractors will submit an APEN and will obtain a permit from CDPHE before construction activities in accordance with state air quality regulations. Project

construction contractors will implement standard industry BMP for dust abatement and abide by required permit conditions issued by the CDPHE Air Pollution Control Division. After construction is complete, no air emissions related to the Project operation are anticipated in unincorporated Adams County.

Construction equipment and operations may cause vibration within the vicinity of the work limits during construction. Vibration from the majority of the equipment anticipated to be used during construction is well below the Federal Transit Administration identified maximum vibration level guidelines for preventing damage to non-historical structures from construction activities. Contractors will be required to initiate, maintain, and supervise safety precautions and programs associated with their work, which will include using proper and safe equipment to complete the work. Contractors will be required to take necessary precautions for safety and provide necessary protection to prevent damage, injury, or loss. After construction is complete, there is no anticipated vibration nuisance caused by the Project.

There is no anticipated odor nuisance caused by the Project.

2.10.10 Areas of Paleontological, Historic or Archaeologic Importance

Map and description of all sites of paleontological, historic or archaeological interest.

Description of the impacts and Net Effect of the Project on sites of paleontological, historic or archaeological interest.

Thornton and ERO consulted with Paleo Solutions, Inc. (Paleo Solutions) regarding the potential impact of the Project on areas of paleontological importance. Paleo Solutions collected and evaluated existing paleontological data for the Project Impact Area. Existing paleontological data analyzed in the assessment are compiled from geologic maps, the Bureau of Land Management's (BLM) Potential Fossil Yield Classification (PFYC) (BLM, 2008; 2016) of the geologic units underlying the Project Impact Area (Murphey et al., 2015), published and unpublished literature, and the results of museum records searches. The evaluation assessed the paleontological importance of the geologic units within the Project Impact Area by researching their known fossil potential and paleontological significance and identified the number and significance of previously recorded fossil localities in the same geologic units within the Project Impact Area and elsewhere.

Based on published geologic mapping (Trimble and Machette, 1979), the Project Impact Area is underlain by five surficial sedimentary deposits: Post-Piney Creek and Piney Creek Alluvium, colluvium, loess, Louviers Alluvium, and Slocum Alluvium; and one sedimentary bedrock geologic unit, the Denver Formation which is synonymized with the Dawson and Arapahoe Formations (undivided). The Denver Formation is Upper Cretaceous to Lower Paleocene in age and has very high paleontological potential (PFYC 5). Loess, Louviers Alluvium, and Slocum Alluvium are Pleistocene in age, and have moderate paleontological potential (PFYC 3). Post-Piney Creek and Piney Creek Alluvium and Colluvium are Holocene in age and have low paleontological potential (PFYC 2).

According to the Denver Museum of Nature and Science there are nine fossil localities within the same Townships and geologic units as the Project Impact Area. The University of Colorado Museum (UCM) has no records of fossil localities within the same geologic units and Townships as the Project Impact Area (UCM, 2021). The OAHP Compass database records two fossil localities within 0.5 mile of the Project Impact Area (OAHP, 2021). The Paleobiology Database (PBDB 2021) has 14 occurrences from the Denver Formation and four occurrences from the Arapahoe Formation within Adams County consisting of vertebrates including dinosaurs and turtles. For the full taxonomic list of fossils from the PBDB in Adams County, refer to PBDB.org.

To facilitate the identification of scientifically significant paleontological resources that might be encountered during Project construction, a qualified paleontologist will monitor construction within 200 yards of any previously recorded fossil locality where Denver Formation bedrock is expected to be encountered during open trench construction in unincorporated Adams County. Areas in which Denver Formation bedrock is expected to be encountered would be determined prior to construction by evaluation of geotechnical reports prepared for design of the Project, and areas that require paleontological monitoring will be included in the Project construction documents.

The location of previously recorded, scientifically significant fossil localities is known to Thornton's paleontological consultant, but not published in this report in an effort to preserve the resource and in accordance with best practices and standard operating procedures.

Thornton will have the Project contractor complete a pre-construction training provided by the paleontologist prior to Project construction on how to identify important paleontological resources if encountered during open trench construction in unincorporated Adams County, and appropriate steps to take to preserve and collect the resource.

If any subsurface bones or other potentially significant paleontological resource is unearthed in an area of unincorporated Adams County that is not monitored by the paleontologist, Thornton will consult with the paleontologist to evaluate its significance and determine the appropriate steps to take to preserve and collect the resource and associated data.

With these mitigation measures, the Project will not significantly degrade areas of paleontological importance.

2.10.11 Hazardous Materials Description

Description of all hazardous, toxic, and explosive substances to be used, stored, transported, disturbed or produced in connection with the Project, including the type and amount of such substances, their location, and the practices and procedures to be implemented to avoid accidental release and exposure, and any foreseeable impacts to the environment of such substances.

Hazardous, toxic, and explosive substances are not anticipated to be used, stored, transported, disturbed or produced after Project construction.

Construction, operation, and maintenance activities involving Thornton or the Project contractors bringing any hazardous materials onto the site will comply with applicable federal, state, and local laws and regulations regarding the handling, storage, disposal, transportation, and use of hazardous substances. In its contract with the Project contractors, Thornton will require that the Project contractors comply with applicable laws.

The Project includes the installation of a buried steel water pipeline, associated water pipeline appurtenances including precast vaults to house pipeline control valves. The water pipeline will be installed with open-cut trench-type construction and some tunneled installations. Hazardous, toxic and explosive substances anticipated to be used, stored, and transported includes typical general infrastructure construction type materials including: fuels, lubricants, and hydraulic fluids to power and operate construction equipment and tools; cast-in-place concrete related materials such as form release agents and concrete curing compound; pipe tunneling drillings fluids; paints and solvents to paint miscellaneous smaller water pipeline appurtenances. There are no foreseeable impacts to the environment from the substances used for the construction of the Project.

Hazardous Materials Site Investigation

With respect to hazardous materials contamination that may be existing along the water pipeline alignment, site investigations within the Segment A Impact Area were conducted. An ERR of the proposed Segment A Impact Area identified several oil and gas wells and/or operations AOC for potential soil and/or groundwater contamination. Because contaminated soils and/or groundwater were identified within the Project Impact Area and the associated concerns with worker health and safety, construction materials handling, liability, and scheduling implications on pipeline construction, further investigation was warranted on several of the AOC. A report presenting the results of the site investigations located within unincorporated Adams County is included in Appendix L. In total, four AOCs associated with the Project Impact Area and were investigated between May through July 2021. The report in Appendix L presents the rationale for the AOC investigation, the methods and procedures used to investigate, sample, and collect data for each area, and the evaluation of the data with respect to the proposed construction.

Location of storage areas designated for equipment, fuel, lubricants, chemical and waste storage with an explanation of spill containment measures.

Construction equipment will be used daily and stored on site overnight within the work limits during construction. The location of equipment will vary based on active construction location. No equipment will be stored after construction activities are complete.

If possible, fueling requirements will be met before arrival at the construction site. Heavy equipment left on site for construction activities will require onsite fueling at staging areas or the construction site. No bulk fuel storage is anticipated to occur on site. Fueling vehicles will be equipped with spill kits and fire extinguishers, and personnel will be properly trained in spill prevention, control, and countermeasures.

To minimize the potential for a spill during fuel transfers and be prepared in the event of a spill, the following measures, as provided in the CCR and CFR, will be followed during loading/unloading of fuel:

- Keep fire away while loading/unloading. Persons in the vicinity are forbidden to smoke, light matches, or carry any flame or lighted cigar, pipe, or cigarette. 49CFR 177.834(c,d).
- Fuel will not be loaded/unloaded from any motor vehicle while the engine is running. The exception is when the engine of the vehicle is to be used in the operation of the pump. 49CFR 177.837(a).
- The fuel tank records will be reviewed to determine the theoretical fuel tank level. 7CCR 1101-14 S2-3-1 and S2-4-2(a)(2.)
- The fuel tank level gauge will be inspected to determine the actual fuel tank level before unloading takes place. (Note: Any fuel tank level discrepancies will be resolved before hooking up to the fuel tank.) 7CCR 1101-14 S2-3-1 & S2-4-2(a)(2).
- The supply truck driver will observe the transfer during the entire operation. 49CFR 177.834(i)(2).
- Once the truck is in position, its emergency brake will be applied, and reasonable precautions will be taken to prevent motion of the truck during unloading (example: utilize wheel chocks when parked on an incline). 49CFR 177.834(e).
- Signs must be posted that remind drivers not to pull away before detaching hoses. 40CFR 112.7(h)(3).
- Containers and cargo tanks will be grounded before and during transfer. 49CFR 177.837(b) & (c).
- The transfer line must be properly disengaged, and the valves and piping of both the fuel tank and truck must be checked for leaks before allowing the truck to leave the site. (40CFR 112.7 h(4) for trucks).

Thornton and the Project contractors will provide and maintain sanitary accommodations for the use of their employees during construction of Segment A in a manner that complies with the requirements and regulations of health departments and other governmental bodies. These accommodations, including trash dumpsters, will be located in several locations along the Segment A alignment based on the general plan for construction. In its contract with the Segment A contractors, Thornton will require that the Segment A contractors comply with applicable laws and regulations. Construction waste will be stockpiled in construction staging areas and removed from the construction site during the construction process. Trash dumpsters will be emptied approximately every 1 to 2 weeks. Segment A will not include the need for permanent dumpsters.

Construction, operation, and maintenance activities will follow BMP for the management of wastes to avoid and minimize impacts from potential spills or other releases to the environment. Adverse impacts from the release of construction or operations wastes are not expected.

Reportable quantities, emergency response plan, spill prevention, and counter measures plan due to the Proposed Project.

Construction, operation, and maintenance activities will follow BMP for the management of wastes to avoid and minimize impacts from potential spills or other releases to the environment. Adverse impacts from the release of construction or operations wastes are not expected.

Construction, operation, and maintenance activities involving Thornton or the Project contractors bringing any hazardous materials onto the site will comply with applicable federal, state, and local laws and regulations regarding the handling, storage, disposal, transportation, and use of hazardous substances. In its contract with the Project contractors, Thornton will require that the Project contractors comply with applicable laws.

A site-specific Materials Management Plan will be prepared by the construction contractor to address any contamination identified prior to or during construction. The plan would be prepared in accordance with applicable OSHA requirements for construction and applicable Colorado solid and hazardous waste regulations.

Best management practices will be implemented during construction in accordance with a SPCC plan.

For any contaminated soils found during construction, the Project contractor will be required to provide volatile organic compound detection equipment, develop a materials management plan, implement a safety plan and

materials management plan, determine an appropriate disposal facility, and remove and dispose of contaminated soils in accordance with applicable laws and regulations.

2.10.12 Balance Between Benefits and Losses

Description of foreseeable benefits of natural, agricultural, recreational, range or industrial resources within the County and opportunities to develop those resources in the future.

The Project alignment was developed to minimize impacts to natural, agricultural, and recreational areas. The alignment generally follows property lines, roads, and existing utility corridors.

Description of foreseeable losses of natural, agricultural, recreational, range or industrial resources within the County and loss of opportunities to develop those resources in the future.

Impacts to natural resources will be minimal and temporary during construction. BMPs will be implemented during construction to minimize impacts to natural resources. The area disturbed during construction will be restored to pre-construction conditions, including grade and vegetation, thus mitigating impacts to natural resources.

Criteria used for developing the Project location included minimizing impacts to agricultural uses. Property owners can continue to use the land within the easement area for purposes such as farming, grazing, or access, so long as such uses do not interfere with or endanger the operation of the Project. Agricultural use is compatible with operation of the Project because the water pipeline and fiber optic cable will be buried below the plow line.

Additional measures that will be implemented to minimize impacts to irrigated agricultural land include:

- Stripping and storing topsoil separately from excavated trench materials
- Seeding or leaving land fallow in accordance with the individual property owner's agreed-upon reclamation procedures following construction

The Project will not result in losses of recreational, range, or industrial resources in Adams County.

The Project is a low impact, passive use that is compatible with other uses. The water pipeline and fiber optic cable will be buried, and land use effects are anticipated to be minimal after construction.

2.10.13 Monitoring and Mitigation Plan

Description of all Mitigation for the Project.

Describe how and when Mitigation shall be implemented and financed.

Describe Impacts that are unavoidable that cannot be Mitigated.

Description of methodology used to measure impacts of the project and effectiveness of proposed Mitigation measures.

Description, location and intervals of proposed monitoring to ensure that Mitigation shall be effective.

The Project construction phase will incorporate measures to mitigate impacts of the construction on the Project site and area residences and businesses. These mitigation measures include stormwater management BMP in compliance with Adams County guidance, control of fugitive dust, noise monitoring for compliance with Adams County noise ordinances, and authorized Project work hours. In addition, Thornton is negotiating with property owners for any required permanent Project easements and temporary construction easements. Thornton is working with Adams County on the approach for Thornton's responsibility for monitoring MS4 compliance requirements for the Project during construction.

Monitoring and mitigation measures will be employed during the construction of the Project. Construction mitigation measures that could be used to mitigate impacts are provided below. Information on financing the TWP, including mitigation, is included in Section AASI Application Checklist – 16 Financial Feasibility of the TWP; Section 2.4 Financial Feasibility of the TWP (Section 6-07-02-05); and Appendix H.

Thornton will have daily oversight representatives on site to monitor that mitigation measures are in place to control construction-related impacts.

Air Quality

- Speed limits for construction vehicles within the work area.
- Water application to disturbed areas, dirt access roads, and stockpiles.
- Erosion control techniques and BMP.
- Revegetation of disturbed areas where appropriate following construction activities.
- The Project will be subject to CDPHE's air permit requirements including a fugitive dust mitigation plan.
- Control of fugitive dust from the construction site will primarily through the use of water spray when conditions are dry and in accordance with permit requirements.

Visual Quality

- Control of fugitive dust from the construction site will primarily through the use of water spray when conditions are dry and in accordance with permit requirements.
- Vehicle tracking pads will be used to mitigate tracking mud on public streets in accordance with permit requirements.
- Construction and silt fencing will be utilized to minimize disturbance to surrounding areas.
- Existing trees and vegetation will be preserved to the extent practicable.
- Disturbed areas will be restored and revegetated using native species as soon as practicable following construction.
- Above grade infrastructure will be painted with colors to match the adjacent environment.

Groundwater Quality and Quantity

- When the pipe trench impacts groundwater, BMPs would be implemented to minimize construction impacts to groundwater by controlling activities and materials that are in the presence of groundwater.
- Construction dewatering permits will be obtained, and the contractor shall comply with all permit conditions.
- The water pipeline design includes installation of low permeability cut-off walls at approximately 1,000 foot spacing to reduce movement of groundwater along the water pipeline.

Wetlands and Riparian Areas

- The areas of construction will be accessed using existing roads to the maximum extent possible. Any temporary access roads will be removed upon completion of the Project and the area restored to preconstruction conditions.
- During construction, open-cut trenches will be as narrow as safely practicable when crossing waters and wetlands.
- Areas temporarily impacted during construction will be returned to preconstruction conditions including grade and vegetation following completion of the proposed construction activities.
- BMPs will be implemented during construction, which will help minimize impacts in the Project work limits. These BMPs could include installing temporary fencing to deter access to sensitive areas, placing staging areas in previously disturbed upland areas, and installing sediment- and erosion-control devices to minimize surface runoff in disturbed areas.
- All temporarily disturbed areas will be planted with native seed mixes, or as reasonably specified by the property owner, and mulched.

Terrestrial and Aquatic Animals and Habitat

- The Project will have no effect on any federally listed threatened, endangered, or candidate wildlife species. A site assessment has been completed and determined no potential or suitable habitat for federally listed threatened, endangered, or candidate wildlife species is present in Project Impact Area. The confirmed that the Project would have no effect on federally listed wildlife species (USFWS 2021c).
- Should construction occur between February and August, a preconstruction nesting bird survey will be conducted by a biologist prior to any clearing or tree removal. Where feasible, Thornton plans to clear vegetation in construction areas prior to the nesting season to minimize impacts on nesting birds. Thornton will review the CPW raptor nest data and perform nest surveys for raptors prior to the nesting season to identify potential active raptor nests prior to construction. Thornton will coordinate with CPW regarding any potential conflicts between scheduled construction and potential raptor nests and develop measures acceptable to CPW to minimize impacts on nesting raptors.
- Where feasible, in areas where construction is scheduled to occur in prairie dog colonies during times when they may be occupied by burrowing owls, prairie dogs will be controlled prior to construction between November 1 and March 14 and burrows closed to discourage nesting by burrowing owls prior to construction. Thornton will follow CPW guidelines so that impacts on nesting burrowing owls in the Project Impact Area will be minimized.

Terrestrial and Aquatic Plant Life

- A site assessment has been completed and determined the Project will have no effect on any federally listed threatened, endangered, or candidate plant species.
- Areas temporarily impacted during construction will be returned to preconstruction conditions including grade and vegetation after completion of the proposed construction activities.
- BMPs will be implemented during construction, which will help minimize impacts in the Project work limits. These BMPs could include installing temporary fencing to deter access to sensitive areas, placing staging areas in previously disturbed upland areas, and installing sediment- and erosion-control devices to minimize surface runoff in disturbed areas.
- All temporarily disturbed areas will be planted with native seed mixes, or as reasonably specified by the property owner, and mulched.
- Topsoil will be salvaged and used on disturbed areas, which would be revegetated where practicable.

Soils, Geologic Conditions and Natural Hazards

- Geotechnical investigations have been conducted along the pipeline alignment and at proposed tunneling sites to characterize the existing soils and determine the geotechnical properties. This information and recommendations contained in the geotechnical report have been developed and incorporated into the design of the Project.

Nuisances

Several noxious weed species were observed in the Project Impact Area during the 2020/2021 site visits, including cheatgrass, Canada thistle, field bindweed, and kochia. Noxious weeds within the Project work limits will be controlled using the following Integrated Pest Management methods as described by the Colorado Department of Agriculture. The following methods have been developed to control noxious weeds in a manner that prevents harm to human health and to environmentally sensitive areas such as waterways, and desirable vegetation including native trees.

- Major equipment (e.g., truck equipment and backhoes) will be cleaned by high-pressure air or water spray before being delivered to the Project work area to avoid introducing undesirable plants and noxious weeds.
- If practicable, topsoil shall not be salvaged in any area densely infested with noxious weeds.
- For areas where removal is not practicable or only a small area of noxious weeds is present, all noxious weed populations in the topsoil will be pretreated.

- Fertilizer or other soil amendments will not be used unless recommended by a revegetation specialist based on site-specific conditions. The use of fertilizers will be restricted because they can promote noxious weeds and can be detrimental to native species in the revegetation mix.
- After construction is complete, all disturbed areas will be properly revegetated as quickly as possible. Prompt revegetation with appropriate species is essential for preventing the spread of noxious weeds.
- Certified weed-free seed and mulch will be used for revegetation. Weed-free straw bales will be used for sediment barriers.
- If stands of noxious weeds become established, weed control will be implemented following an integrated approach specific to the weed species present.
- Because new control methods are continually being developed, particularly for herbicide applications, any control methods used will follow the Colorado Department of Agriculture and Adams County recommendations at the time of implementation.

Areas of Paleontological, Historic or Archaeological Importance

- To facilitate the identification of scientifically significant paleontological resources that might be encountered during construction of the Project, a qualified paleontologist will monitor construction within 200 yards of any previously recorded fossil locality where Denver Formation bedrock is expected to be encountered during open-cut construction in unincorporated Adams County.
- Areas in which Denver Formation bedrock is expected to be encountered would be determined prior to construction by evaluation of geotechnical reports prepared for design of the Project, and areas that require paleontological monitoring will be included in the Project construction documents. In addition, the City will have the contractor complete a pre-construction training provided by the paleontologist prior to Project construction on how to identify important paleontological resources if encountered during open-cut construction in unincorporated Adams County and appropriate steps to take to preserve and collect the resource.
- If any subsurface bones or other potential paleontological resource is unearthed in an open-cut construction area in unincorporated Adams County that is not monitored by the paleontologist, Thornton will consult with the paleontologist to evaluate its significance and determine the appropriate steps to take to preserve and collect the resource and associated data.
- The Project will avoid known historic properties. Compliance with Section 106 NHPA or the Colorado State Historic Act is necessary only when state or federal permits, funding, or lands are involved. For instance, if a drainage, canal, or ditch is determined jurisdictional and the Project requires a CWA Section 404 permit, the Corps may require a pedestrian survey and State Historic Preservation Officer consultation for the permitted area, associated construction limits, and potentially a 100 foot buffer. If a historical ditch or canal requires a CWA Section 404 permit the effects on the ditch would have to be assessed and consulted on through formal documentation. Open trench construction across a canal or ditch, however, would not necessarily result in an adverse effect, provided that the ditch is returned to preconstruction contours.

Hazardous Materials

- Construction, operation, and maintenance activities involving Thornton or the Project contractors bringing any hazardous materials onto the site will comply with applicable federal, state, and local laws and regulations regarding the handling, storage, disposal, transportation, and use of hazardous substances. In its contract with the Project contractors, Thornton will require that Project contractors comply with applicable laws.
- The Project includes the installation of a buried steel water pipeline, associated water pipeline appurtenances including precast vaults to house pipeline control valves. The pipeline will be installed with open-cut trench-type construction and some tunneled installations. Hazardous, toxic and explosive substances anticipated to be used, stored, and transported includes typical general infrastructure construction materials including: fuels, lubricants, and hydraulic fluids to power and operate construction equipment and tools; cast-in-place concrete-related materials such as form release agents and concrete curing compound; pipe tunneling drilling fluids; paints and solvents to paint miscellaneous water pipeline

appurtenances. There are no foreseeable impacts to the environment from the substances used for the construction of the Project.

- A Materials Management Plan will be prepared to address any contamination identified prior to or during construction. The plan will be prepared in accordance with applicable OSHA requirements for construction and applicable Colorado solid and hazardous waste regulations.
- BMPs will be implemented during construction.

2.11 Referrals to Outside Agencies, Response to Referral Comments and Neighborhood/Scoping Meeting (Section 6-07-02-12)

The following Thornton variance request and Adams County response is documented in an Adams County Memorandum, dated April 22, 2021, from Layla Bajelan, included in Appendix A.

Thornton requested a variance on this topic as follows:

> Section 6-16 Intergovernmental Agreements does not specify referrals to outside agencies as part of the process. Thornton requests that Adams County confirm whether referrals to outside agencies will be required as part of the IGA process.

Adams County response:

> Section 2-01-05 of the Adams County development Standards and Regulations, the County is required to send out notices to all applicable referral agencies within a 3-mile buffer from the subject site. The IGA is being considered in lieu of the AASI permit; however, the noticing requirements will still be applicable, as the IGA will be heard by the Board of County Commissioners.

The Community and Economic Development Department shall determine which outside referral agencies may be affected by the proposed development and should receive referral packets. Potential referral agencies may include, but not be limited to homeowner's associations, local, regional, state and federal governmental entities, and service providers.

Appendix M contains the list of outside referral agencies that were identified by Adams County for the Project.

The applicant shall provide written notice to property owners within five hundred (500') feet of the property lines of the parcel(s) of land which the development is proposed. The Community and Economic Development Director may extend the 500' foot property owner notice area as necessary. The written notice shall state the date, time, place, and purpose of the neighborhood/scoping meeting. All available information concerning the Proposed Project shall be presented by the Applicant or designee during the neighborhood/scoping meeting. A written summary of the meeting including comment sheets, and names, addresses, and phone numbers of attendees shall be submitted to the Community and Economic Development in order for an application to be considered complete.

A neighborhood meeting was held on August 12, 2021 at the Margaret Carpenter Recreation Center, Thornton, CO. Stakeholders located within 750 feet of the Project were invited. The mailing list was generated by Adams County and invitations were mailed by Thornton in accordance with Section 2-01-02 of the Regulations.

The meeting was an open house format. Exhibits included several that presented the project objectives and history of the TWP development. Exhibits illustrated the full extent of the TWP and details specific to the Project. Large scale maps were displayed showing aerial background, the proposed Project alignment, and property lines. Thornton representatives and engineering design team representatives were available for questions. Comment sheets were available for attendees to provide feedback concerning the Project. Attendees were provided the opportunity to sign up to receive TWP updates and information was provided regarding where to find information at the TWP website.

The meeting was attended by 21 people. After locating their residence, business, or area of interest on the map exhibits, most of the public attendees found that the Project would not impact them directly or the impacts were limited. There was public interest regarding how traffic would be managed and associated concerns about traffic congestion. The public was advised that the Project would include traffic control plans to mitigate traffic-related impacts. The project team generally did not receive negative feedback or feedback that would result in any revisions

to the planned Project configuration or design. Copies of the public meeting sign-in sheet, exhibits, and maps displayed at the meeting are included in Appendix G.

The Community and Economic Development Department shall review the referral packets in order to determine that there is sufficient information in the referral packet, including, but not limited to, AASI Permit information that pertains to the referral agency.

The Applicant shall be responsible for putting the referral packets together and addressing the envelopes, but the Community and Economic Development Department shall be responsible for mailing the packets.

The referral entities shall have 30 days to respond.

The Applicant shall respond to all of the referral comments and that response shall be included as part of the application. This referral process is required, along with all other application submittal requirements, in order for an application to be considered complete.

Thornton will prepare referral packets and address envelopes for Adams County Community and Economic Development Department to mail. Thornton will provide responses to referral comments to the referral agency and to Adams County.

2.12 Additional Submittal Requirements for Major Water and Sewer Projects (Section 6-08-01)

The following Thornton variance request and Adams County response is documented in an Adams County Memorandum, dated April 22, 2021, from Layla Bajelan, included in Appendix A.

Thornton requested a variance on this topic as follows:

> Thornton requests that Adams County waive this submittal requirements. Consolidating Thornton's Water Utility Enterprise with other municipal water supply systems or agencies is not feasible. Thornton's water system has been designed and built since the early 1960s to serve only customers within the water utilities services area, and Thornton's water rights are not usable outside the water utility's services area. Other area water supply agencies do not have the capacity or water supply to serve Thornton's needs. The Project is not a sewer project.

Adams County response:

> Adams County will waive this requirement per the applicant's explanation.

3. AASI Approval Criteria-Section 6-17

This section addresses the General Approval Criteria described in Section 6-17-01 and the Additional Approval Criteria described in Section 6-17-02 of the Regulations governing AASI. Table 7 presents the Approval Criteria and description of the compliance response for each item under Section 6-17-01 and 6-17-02.

Table 7. Approval Criteria and Compliance

Approval Criteria	Compliance Response
6-17-01 General Approval Criteria	
1. Documentation that prior to site disturbance associated with the Proposed Project, the Applicant can and will obtain all necessary property rights, permits and approvals. The Board may, at its discretion, defer making a final decision on the application until outstanding property rights, permits and approvals are obtained or the Board may grant a Permit with conditions and/or conditions precedent which will adequately address outstanding concerns.	Thornton has, at the time that this report was submitted, acquired 50% of the easements required for the Project. Thornton can and will continue good-faith negotiations with property owners and all easements required for the Project will be acquired before construction. Easements will be recorded with the Adams County Clerk and Recorders Office. Thornton can and will obtain all necessary permits required for the Project before construction.
2. The Proposed Project considers the relevant provisions of the regional water quality plans.	The water being conveyed by the Project is raw water meant for domestic use. The Project is the siting and construction of an underground water conveyance pipeline that has no wastewater impacts. In addition, the Denver Regional Council of Governments no longer has a regional Clean Water Plan. As presented in Appendix A, Adams County granted a variance and waived submittal requirements relevant to this approval criteria on April 22, 2021.
3. The Applicant has the necessary expertise and financial capability to develop and operate the Proposed Project consistent with all requirements and conditions.	Thornton operates a Water Utility Enterprise under the direction of the Thornton City Council. The Water Utility Enterprise funds its cost-of-service operations through rates and fees charged to the customers of the Water Utility Enterprise. The Thornton City Council has identified the funding required for the TWP and has established rates and fees to cover the expenses for the TWP, as well as the capital and operating expenses of the remainder of the Water Utility Enterprise. Thornton employs Colorado Certified Water Professional staff that are qualified and certified to operate its domestic water delivery systems. Thornton currently operates the following facilities as part of its domestic water delivery system: • Two advanced water treatment plants with a combined capacity of 70 million gallons per day • Over 580 miles of treated water transmission pipelines with diameters up to 60 inches • Approximately 16.5 miles of raw water transmission pipelines with diameters up to 48 inches • Seven treated water pump stations with capacities up to 94.71 million gallons per day • Seven raw water pump stations with capacities up to 60 million gallons per day As presented in Appendix A, Adams County granted a variance of submittal requirements relevant to this approval criteria on April 22, 2021 with the condition that the City submit documentation that the City Council approved when identifying the funding required for the TWP (refer to Appendix H).
4. The Proposed Project is technically and financially feasible.	Thornton operates a Water Utility Enterprise under the direction of the Thornton City Council. The Water Utility Enterprise funds its cost-of-service operations through rates and fees charged to the customers of the Water Utility Enterprise. The Thornton City Council has identified the funding required for the TWP and has established rates and fees to cover the expenses for the TWP, as well as the capital and operating expenses of the remainder of the Water Utility Enterprise. As presented in Appendix A, Adams County granted a variance of submittal requirements relevant to this approval criteria on April 22, 2021 with the condition that the City submit documentation that the City Council approved when identifying the funding required for the TWP (refer to Appendix H).
5. The Proposed Project is not subject to significant risk from Natural Hazards.	Natural hazards identified through the desktop study along the water pipeline alignment include collapsible and expansive (swelling) soils and bedrock and drainage areas. Based upon the review of available published geologic data, natural hazards due to steep unstable slopes, avalanche, debris fans, mud flows, rockslide, faults and fissures, seismicity, and wildfire hazard are deemed unlikely along the water pipeline alignment. Design requirements for the water pipeline will be addressed based on the findings of the geotechnical investigation conducted along the alignment and recommendations contained in the Project engineering geotechnical design reports. Mitigation measures will be implemented to protect the water pipeline and appurtenances from natural hazards.

Table 7. Approval Criteria and Compliance

Approval Criteria	Compliance Response
	The water pipeline will be buried a minimum depth of 5 feet below grade and will not be subject to significant risk from flood events.
6. The Proposed Project is in general conformity with the applicable comprehensive plans.	The Adams County Comprehensive Plan and the companion documents Adams County Transportation Plan (adopted December 2012), Riverdale Road Corridor Plan, Adams County Hazard Mitigation Plan (adopted December 2020), and the Adams County Open Space, Parks, and Trails Master Plan (adopted November 16, 2012) were reviewed for applicability to the Project. The Adams County Comprehensive Plan, the Adams County Hazard Mitigation Plan, and the Adams County Open Space, Parks, and Trails Master Plan were found to be applicable to the Project and discussion of compliance with those plans is included in Section 2.5.2.
7. The Proposed Project does not have a significant adverse effect on the capability of local government to provide services or exceed the capacity of service delivery systems.	The Project will not have a negative effect on local government or any other existing public facilities and services. The construction, operation, and maintenance of the underground water pipeline and appurtenances will not require any new public facilities or impact existing services such as police, fire, water, wastewater, and healthcare. As presented in Exhibit A, Adams County has waived submittal requirements relevant to this approval criteria per a March 17, 2021 email from Layla Bajelan.
8. The Proposed Project does not create an undue financial burden on existing or future residents of the County.	The Project will not impact the tax burden or fee structure for any government services except municipal water supply, and then only for those water customers that are within the service area of Thornton's water utility (primarily within the city limits of Thornton). Adams County residents that are located within Thornton's water utility's service area and that receive water service from Thornton are subject to rates and fees established by the Thornton City Council. As presented in Appendix A, Adams County granted a variance and waived submittal requirements relevant to this approval criteria on April 22, 2021.
9. The Proposed Project does not significantly degrade any substantial sector of the local economy.	The long term operation of the Project will not degrade any sector of the local economy in Adams County. Construction of the Project will likely temporarily bolster the Adams County economy by generating local construction jobs. As presented in Appendix A, Adams County has waived submittal requirements relevant to this approval criteria per a March 17, 2021 email from Layla Bajelan.
10. The Proposed Project does not unduly degrade the quality or quantity of recreational opportunities and experience.	The construction, operation, and maintenance of the underground water pipeline and appurtenances will not unduly degrade the quality or quantity of recreational opportunities and experience. Land use within and adjacent to the Project Impact area are agricultural, residential, public/quasi-public, and municipal areas of Thornton. Uses or access within the easement can continue after construction so long as such uses do not interfere with or endanger the operation of the Project. As presented in Appendix A, Adams County has waived submittal requirements relevant to this approval criteria per a March 17, 2021 email from Layla Bajelan.
11. The planning, design and operation of the Proposed Project reflects principals of resource conservation, energy efficiency and recycling or reuse.	The Project is developed to minimize the Project footprint within unincorporated Adams County and minimize impacts to residents, the public, and the natural environment. Conservation considerations have been addressed during the Project concept development and design, and are applied during the Project construction, and subsequently through the operational life of the facility. The project's operational conservation approach is guided by Thornton's Sustainability Action Agenda which identifies eight action areas in which Thornton seeks to advance sustainability efforts. Thornton has historically maintained one of the lowest residential daily per capita water consumption rates among cities in the Front Range. See Section 2.2.5 for additional details.
12. The Proposed Project does not significantly degrade the environment.	See responses for 12a – 12h.
a. Air quality.	The Project will not impact air quality after construction is complete. Construction of the Project would result in temporary impacts to air quality from dust generated from ground disturbance and emissions from vehicles and equipment. The construction contractor will implement standard best management practices (BMP) to control dust construction emissions and will obtain and comply with air pollution control permits required by the CDPHE.

Table 7. Approval Criteria and Compliance

Approval Criteria	Compliance Response
b. Visual quality.	Visual impacts of the completed Project will be negligible, as the water pipeline will be buried underground and any above grade appurtenances, such as, vent pipes and electrical equipment cabinets will be low profile and/or painted with colors to match the adjacent environment. Details of these facilities are included in the site plans (Appendix E). Upon completion of construction, the water pipeline work limits will be restored to pre-construction conditions with native seeding and sod, as applicable. Temporary visual impacts may occur during the water pipeline construction and will be mitigated as described in Section 2.10.2.
c. Surface water quality.	Impacts on surface water quality are not anticipated after construction. The Project will have no impact on the quantity of surface water. In general, following construction, historic flow patterns will be maintained, and the land will drain in the same manner and at generally the same rate as it did before construction. Permits from CDPHE and Adams County will be obtained for the Project and will include requirements for control of stormwater runoff and groundwater discharges from construction areas and activities. A Stormwater Management Plan including BMPs will be implemented in accordance with permit requirements and will include application of erosion control techniques and the successful revegetation of disturbed areas that will be used to protect surface hydrology and water quality. With the implementation of BMPs and other measures required to meet applicable permit requirements, the Project will have negligible impacts on surface water during construction.
d. Groundwater quality.	Impacts to groundwater will be mitigated and affects to aquifers are not anticipated. Temporary construction activities and dewatering in areas of streams and shallow alluvial aquifers may have a localized effect during construction; however, the Project is unlikely to have any long-term adverse effects on aquifer recharge areas.
e. Wetlands, floodplains, streambed meander limits, recharge areas, and riparian areas.	Impacts to wetlands, floodplains, streambed meander limits, recharge areas, and riparian areas are not anticipated after construction. Impacts are negligible and are temporary during construction. Disturbed areas will be restored to pre-construction grades and revegetated where appropriate after construction. BMPs will be implemented to protect surrounding areas from stormwater runoff and erosion. Thornton will obtain applicable Nationwide Permits from the USACE and floodplain permits from Adams County. See Appendix I for additional information.
f. Terrestrial and aquatic animal life	No suitable habitat exists for any federally listed threatened, endangered, or candidate wildlife species the Project will have no impact to those species. Suitable habitat exists for several state listed species and a site assessment will be conducted just before construction. CPW guidelines will be followed during construction to minimize impacts. Impacts to other wildlife will be minimal during construction. All temporarily disturbed areas would be returned to preconstruction grades and seeded with native vegetation, or as reasonably specified by the property owner, once construction is complete. Long-term impacts to wildlife are not anticipated. See Appendix I for additional details.
g. Terrestrial and aquatic plant life	No federally listed plant species are likely to be present in the Project work limits. All temporarily disturbed areas would be returned to preconstruction grades and seeded with native vegetation, or as reasonably specified by the property owner, once construction is complete. Certified weed-free seed mix consisting of drought-tolerant native grasses and other types of vegetation as appropriate to meet property owner's reasonable preferences will be implemented for the revegetation of disturbed areas. Because most of the impacts on vegetation would be temporary, there would be no long-term adverse effects on vegetation. Noxious weeds within the TWP work limits will be controlled using the Integrated Pest Management methods as described by the Colorado Department of Agriculture. Those methods have been developed to control noxious weeds in a manner that prevents harm to human health and to environmentally sensitive areas such as waterways and desirable vegetation including native trees. See Appendix I for additional details.

Table 7. Approval Criteria and Compliance

Approval Criteria	Compliance Response
h. Soils and geologic conditions.	The Project is unlikely to have an adverse effect on the soil and geologic conditions in the area. Temporary construction activities and dewatering in areas of streams and shallow alluvial aquifers may have a localized effect during construction; however, the Project is unlikely to have any long-term adverse effects on streambed meander limits and aquifer recharge areas. Areas disturbed for construction of the water pipeline will be restored to pre-construction grades and revegetated to pre-construction vegetation where appropriate after construction. The Project design phase includes field investigation and development of geotechnical data and design reports for alignment. The water pipeline design will include addressing the findings and recommendations from the geotechnical data and design reports
13. The Proposed Project does not cause a nuisance and if a nuisance has been determined to be created by the Proposed Project the nuisance has been mitigated to the satisfaction of the County.	After construction is complete, there are no anticipated nuisances caused by the Project in unincorporated Adams County. During the construction phase there will be unavoidable minor nuisances that are typical for construction projects. These nuisances will be short-term in nature. Thornton intends to mitigate these construction-related disturbances through the use of BMPs, in accordance with permits and federal, state, and local regulations.
14. The Proposed Project does not significantly degrade areas of paleontological,historic, or archaeological importance.	Cultural resources studies were conducted to identify area of paleontological, historical, or archeological importance. A number of processes have been identified to facilitate the identification of scientifically significant paleontological resources that might be encountered during construction. A qualified paleontologist will monitor construction within 200 yards of any previously recorded fossil locality where Denver Formation bedrock is expected to be encountered during Project construction in unincorporated Adams County. The location of previously recorded, scientifically significant fossil localities is known to Thornton's paleontological consultant, but not published in this report in an effort to preserve the resource and in accordance with best practices and standard operating procedures. Areas in which Denver Formation bedrock is expected to be encountered in unincorporated Adams County would be determined prior to construction by evaluation of geotechnical reports prepared for design of the Project, and areas that require paleontological monitoring will be included in the Project construction documents. In addition, Thornton will have the contractor complete a pre-construction training provided by the paleontologist prior to construction on how to identify important paleontological resources if encountered during construction in unincorporated Adams County, and appropriate steps to take to preserve and collect the resource. If any subsurface bones or other potentially significant paleontological resource is unearthed in an area in unincorporated Adams County that is not monitored by the paleontologist, Thornton will consult with the paleontologist to evaluate its significance and determine the appropriate steps to take to preserve and collect the resource and associated data. With these mitigation measures, the Project would not significantly degrade areas of paleontological importance. The Project has little or no potential to result in any adverse effects on known sites, structures, or buildings that are currently considered historic properties (i.e., cultural resources that are eligible, needs data, or listed in the State or National Register of Historic Places). All four previously documented resources are either destroyed or do not intersect the proposed Project work limits. If during construction, a sensitive cultural resource is discovered work will cease, the area will be protected, and a qualified archaeologist with the Colorado Office of Archaeology & Historical Preservation will be brought to the site to evaluate the eligibility of the cultural resource under Section 106.
15. The Proposed Project does not result in unreasonable risk of releases of hazardous materials. In making this determination as to such risk, the Board's consideration shall include:	Hazardous, toxic, and explosive substances are not anticipated to be used, stored, transported, disturbed or produced after Project construction. See Section 2.10.7 for additional details.
a. Plans for compliance with federal and State handling, storage, disposal and transportation requirements.	Construction, operation, and maintenance activities involving Thornton or the Project contractors bringing any hazardous materials onto the site will comply with applicable federal, state, and local laws and regulations regarding the handling, storage, disposal, transportation, and use of hazardous substances. In its contract with the Project contractors, Thornton will require that the Project contractors comply with applicable laws. A materials management plan will be prepared by the construction contractor to address any contamination identified prior to or during construction. The plan would be prepared in accordance with applicable OSHA requirements for construction and applicable Colorado solid and hazardous waste regulations.
b. Use of waste minimization techniques.	There will be no permanent waste associated with the Project.

Table 7. Approval Criteria and Compliance

Approval Criteria	Compliance Response
c. Adequacy of spill prevention and counter measures, and emergency response plans.	Best management practices will be implemented during construction in accordance with Code of Colorado Regulations and Code of Federal Regulations.
16. The benefits accruing to the County and its citizens from the proposed activity outweigh the losses of any resources within the County, or the losses of opportunities to develop such resources.	The Project is a low impact, passive use that is compatible with other uses. The water pipeline and fiber optic cable will be buried, and land use effects are anticipated to be minimal after construction. The Project alignment was developed to minimize impacts to natural, agricultural, and recreational areas. The alignment generally follows property lines, roads, and existing utility corridors. The alignment was developed to minimize impacts to areas in unincorporated Adams County. Where feasible, the water pipeline location is proposed to be located within Thornton jurisdictional areas. The Project does not impact existing recreation activities, and to the contrary, fosters opportunity for future collaboration on multi-use corridors and trails along pipeline easements and other recreational opportunities in the vicinity of the Project. Impacts to natural resources will be minimal and temporary during construction. BMPs will be implemented during construction to minimize impacts to natural resources. The area disturbed for constructing the water pipeline will be restored to pre-construction conditions, including area grading and vegetation.
17. The Proposed Project is the best alternative available based on consideration of need, existing technology, cost, impact and these Regulations.	Thornton evaluated multiple alignments for the Project and selected the best alignment to meet the Project objectives, including minimizing impacts to property, residents and businesses.
18. The Proposed Project shall not unduly degrade the quality or quantity of agricultural activities.	Criteria used for developing the water pipeline location included minimizing impacts to agricultural uses. Property owners can continue to use the land within the easement area for purposes such as farming, grazing, or access, so long as such uses do not interfere with or endanger the operation of the Project. Agricultural use, is compatible with operation of the Project because the water pipeline and fiber optic cable will be buried below the plow line.
19. The proposed Project does not negatively affect transportation in the area.	Impacts caused by construction equipment and activity on Adams County roads will be short term during construction. Access will be maintained for local area residents. Emergency vehicle access needs will be maintained, and construction activities coordinated with local fire departments, police departments, ambulance services, and other emergency responders as necessary. Thornton places a high priority on safety during construction. Thornton will coordinate with local school districts regarding construction and haul routes and school bus traffic. Project contractors will implement traffic management plans based upon local traffic control requirements and general safe operating practices. Proper signage, flaggers, lighting, speed limits, work hours, postings, notifications, and other precautionary safety measures will be taken to protect the residents of Adams County and the Project contractors' employees. After construction, the water pipeline and appurtenances could operate year-round, 24 hours a day; however, the water pipeline and appurtenances will be unmanned. It is anticipated that normal operations could include up to two TWP operators traveling in one pickup truck daily along the water pipeline route for a visual inspection and maintenance activities during the hours of 8 a.m. to 5 p.m. Consequently, there will be limited effects on the volume of traffic on local streets. As presented in Appendix A, Adams County has waived submittal requirement relevant to this approval criteria per a March 17, 2021 email from Layla Bajelan.
20. All reasonable alternatives to the Proposed Project, including use of existing rights-of-way and joint use of rights-of-way wherever uses are compatible, have been adequately assessed and the Proposed Project is compatible with and represents the best interests of the people of the County and represents a fair and reasonable utilization of resources in the Impact Area.	The water pipeline alignment was developed to minimize impacts to areas in unincorporated Adams County. Where feasible, the water pipeline location is proposed to be located within, existing utility corridors, and parallel to property lines and roads. Refer to Figures 3 and 4 and the alternative alignment report in Appendix D.
21. The nature and location of the Proposed Project or expansion will not unduly interfere with existing easements, rights-of-way, other utilities, canals, mineral claims or roads.	The location of existing easements, rights-of-way, utilities, irrigation ditches, and roads were considered in the design of the Project. The water pipeline will be constructed to meet clearance requirements of utility providers and ditch companies. Thornton is coordinating the location of the water pipeline with stakeholders, including Adams County.

Table 7. Approval Criteria and Compliance

Approval Criteria	Compliance Response
22. Adequate electric, gas, telephone, water, sewage and other utilities exist or shall be developed to service the site.	The Project will not require gas, telephone, water, or sewage. Electrical service for cathodic protection of the water pipeline will be required and Thornton is working with electrical providers that service will be available to the site.
23. The proposed project will not have a significantly adverse Net Effect on the capacities or functioning of streams, lakes and reservoirs in the impact area, nor on the permeability, volume, recharge capability and depth of aquifers in the impact area.	The Project will have no impact on the quantity of surface water. In general, following construction, historic flow patterns will be maintained, and the land will drain in the same manner and at generally the same rate as it did before construction. Impacts on surface water are not anticipated after construction. With the implementation of BMPs and other measures required to meet applicable permit requirements, the Project will have negligible impacts on surface water during construction. Impacts to groundwater will be mitigated and affects to aquifers are not anticipated. Temporary construction activities and dewatering in areas of streams and shallow alluvial aquifers may have a localized effect during construction; however, the Project is unlikely to have any long-term adverse effects on aquifer recharge areas.
24. If the purpose and need for the Proposed Project are to meet the needs of an increasing population within the County, the area and community development plans and population trends clearly demonstrate a need for such development.	The TWP is a domestic water delivery system that will convey water from the WSSC system that was purchased by the Thornton in the mid-1980s to enhance Thornton's water supply reliability and drought resiliency, help address source water quality issues, and meet municipal and industrial demands of Thornton's water customers through 2065 to Thornton. Thornton's population is projected to increase from its current estimated population of 146,427 residents (Thornton, Fourth Quarter 2020 Population Estimate and Housing Inventory Report) to 242,000 residents by 2065. Thornton has proactively planned for the anticipated population increase to ensure that Thornton can provide a reliable, high quality and economical water supply to meet the needs of its residents and businesses. Thornton's service area includes some locations within unincorporated Adams County.
25. The Proposed Project is compatible with the surrounding area, harmonious with the character of the neighborhood, not detrimental to the immediate area, not detrimental to the future development of the area, and not detrimental to the health, safety, or welfare of the inhabitants of the area.	The Project is not anticipated to affect land use patterns in Adams County. While the installation of the water pipeline will create temporary impacts during construction, the water pipeline will be buried underground, and disturbed surfaces will be restored to pre-construction conditions. Land use within and adjacent to the Project Impact Area are agricultural, residential, public/quasi-public, and municipal areas of Thornton. Uses or access within the easement can continue after construction so long as such uses do not interfere with or endanger the operation of the Project. Reasonable measures to ensure that the health, safety, and welfare of the inhabitants of Adams County will be protected, and to mitigate or minimize potential adverse impacts from the Project are included in the Environmental Impact Analysis sections of this report. Emergency vehicle access needs will be maintained, and construction activities coordinated with local fire departments, police departments, ambulance services, and other emergency responders as necessary. Thornton places a high priority on safety during construction. Contractors will be required to initiate, maintain, and supervise safety precautions and programs associated with their work, which will include using proper and safe equipment to complete the work. Contractors will be required to take necessary precautions for safety and provide necessary protection to prevent damage, injury, or loss. In its contract with the Project contractors, Thornton will require that the Project contractors comply with applicable laws and regulations.
6-17-02 Additional Approval Criteria **6-17-02-01 The Following Additional Criteria Apply to Major Water and Sewer Projects**	
1. To the extent practicable, Domestic Water and Wastewater Treatment Systems will be consolidated with existing facilities within the area. The determination of whether consolidation is practicable shall include but not be limited to the following considerations: a. Distance to and capacity of nearest Domestic Water or Wastewater Treatment System. b. Technical, legal, managerial and financial feasibility of connecting to existing Domestic Water or Wastewater Treatment System.	Consolidating Thornton's Water Utility Enterprise with other municipal water supply systems or agencies is not feasible. Thornton's water system has been designed and built since the early 1960's to serve only customers within the water utility's service area, and Thornton's water rights are not useable outside the water utility's service area. Other area water supply agencies do not have the capacity or water supply to serve Thornton's needs. Thornton has already consolidated its wastewater service with other municipalities through the Metro Wastewater Reclamation District. As presented in Appendix A, Adams County granted a variance and waived submittal requirements relevant to this approval criteria on April 22, 2021.

Table 7. Approval Criteria and Compliance

Approval Criteria	Compliance Response
c. Scope of the Service Area for existing Domestic Water or Wastewater Treatment System. d. Projected growth and development in the Service Area of existing Domestic Water or Wastewater Treatment System.	
2. The Proposed Project will not result in duplicative services within the County.	The Project will not result in duplicative services to Thornton's customers. The TWP will enhance Thornton's water supply reliability and drought resiliency, help address source water quality issues, and meet municipal and industrial demands of Thornton's water customers through 2065. As presented in Appendix A, Adams County granted a variance and waived submittal requirements relevant to this approval criteria on April 22, 2021.
3. The Proposed Project will be constructed in areas that will result in the proper utilization of existing treatment plants and the orderly development of domestic water and sewage treatment systems of adjacent communities.	The Project will convey water to the existing Wes Brown Water Treatment Plant. As presented in Appendix A, Adams County granted a variance and waived submittal requirements relevant to this approval criteria on April 22, 2021.
4. If the Proposed Project is designed to serve areas within the County, it will meet community development and population demands in those areas.	The TWP is a domestic water delivery system that will convey water from the WSSC system that was purchased by the Thornton in the mid-1980s to enhance Thornton's water supply reliability and drought resiliency, help address source water quality issues, and meet municipal and industrial demands of Thornton's water customers through 2065 to Thornton. Thornton's population is projected to increase from its current estimated population of 146,427 residents (Thornton, Fourth Quarter 2020 Population Estimate and Housing Inventory Report) to 242,000 residents by 2065. Thornton has proactively planned for the anticipated population increase to ensure that Thornton can provide a reliable, high quality and economical water supply to meet the needs of its residents and businesses. Thornton's service area includes some locations within unincorporated Adams County. As presented in Appendix A, Adams County granted a variance and waived submittal requirements relevant to this approval criteria on April 22, 2021.
4. The Proposed Project emphasizes the most efficient use of water, including the recycling, reuse and conservation of water.	The TWP's operational conservation approach is guided by Thornton's Sustainability Action Agenda which identifies eight action areas in which Thornton seeks to advance sustainability efforts. Thornton has historically maintained one of the lowest residential daily per capita water consumption rates among cities in the Front Range. As presented in Appendix A, Adams County granted a variance and waived submittal requirements relevant to this approval criteria on April 22, 2021.
5. The Applicant demonstrates sufficient managerial expertise and capacity to operate the facility.	Thornton operates a Water Utility Enterprise under the direction of the Thornton City Council. The Water Utility Enterprise funds its cost-of-service operations through rates and fees charged to the customers of the Water Utility Enterprise. The Thornton City Council has identified the funding required for the TWP and has established rates and fees to cover the expenses for the TWP, as well as the capital and operating expenses of the remainder of the Water Utility Enterprise. Thornton employs Colorado Certified Water Professional staff that are qualified and certified to operate its domestic water delivery systems. Thornton currently operates the following facilities as part of its domestic water delivery system: • Two advanced water treatment plants with a combined capacity of 70 million gallons per day • Over 580 miles of treated water transmission pipelines with diameters up to 60 inches • Approximately 16.5 miles of raw water transmission pipelines with diameters up to 48 inches • Seven treated water pump stations with capacities up to 94.71 million gallons per day • Seven raw water pump stations with capacities up to 60 million gallons per day As presented in Appendix A, Adams County granted a variance and waived submittal requirements relevant to this approval criteria on April 22, 2021.

4. Neighborhood Meeting-Section 2-01-02

A neighborhood public meeting was held on August 12, 2021 at the Margaret Carpenter Recreation Center, Thornton, CO. Stakeholders located within 750 feet of the Project were invited. The mailing list was generated by Adams County and invitations were mailed by Thornton in accordance with Section 2-01-02 of the Regulations.

The meeting was an open house format. Exhibits included several that presented the project objectives and history of the TWP development. Exhibits illustrated the full extent of the TWP and details specific to the Project. Large scale maps were displayed showing aerial background, the proposed water pipeline alignment, and property lines. Thornton representatives and engineering design team representatives were available for questions. Comment sheets were available for attendees to provide feedback concerning the Project. Attendees were provided the opportunity to sign up to receive TWP updates and information was provided regarding where to find information at the TWP website.

The meeting was attended by 21 people. After locating their residence, business, or area of interest on the map exhibits, most of the public attendees found that the Project did not impact them directly or the impacts were limited. There was public interest regarding how traffic would be managed and associated concerns about traffic congestion. The public was advised that the Project would include traffic control plans to mitigate traffic-related impacts. The project team generally did not receive negative feedback or feedback that would result in any revisions to the planned Project configuration or design. Copies of the public meeting sign-in sheet, exhibits, and maps displayed at the meeting are included in Appendix G.

5. References

Adams County Comprehensive Plan. Imagine Adams County (adopted December 2012).

Adams County Hazard Mitigation Plan (adopted December 2020).

Adams County Open Space, Parks, and Trails Master Plan (adopted November 16, 2012).

Adams County Planning Commission and Board of County Commissioners. The Adams County Comprehensive Plan.

Adams County Transportation Plan (adopted December 2012).

Bureau of Land Management (BLM). 2008.

BLM. 2016.

Chase and McConaghy. 1972. *Generalized Surficial Geologic Map of the Denver Area, Colorado.*

ERO Resources Corporation (ERO). 2021. Natural and Cultural Resources Assessment, Thornton Water Project-Segment A, Adams County, CO. December 23

ERO Resources Corporation (ERO). 2021. Phase II Limited Site Investigation, Thornton Water Project CIP 12-1777, Segment A-East 88th Avenue to East 168th Avenue, Adams County, CO. 8/3/2021

Kumar & Associates, 2021. Geotechnical Design memorandum, Thornton Raw Water Line Project, Thornton Reach Phase I. August 17

Kumar & Associates, 2021. Geotechnical Information Report, Thornton Raw Water Line Project, Thornton Reach Phase 2, Draft Submittal. December 16.

Lithos Engineering. 2021. Geotechnical Baseline Report-95% Design, Thornton Water Project-Thornton Reach Phase I, Thornton, CO. August 2021

Lithos Engineering. 2021. Geotechnical Data Report-95% Design, Thornton Water Project-Thornton Reach Phase I, Thornton, CO. August 2021

Lithos Engineering. 2022. Geotechnical Baseline Report-Draft Pre-Final Design, Thornton Water Project-Segment A, Phase 2, Thornton, CO. January 2022

Lithos Engineering. 2021. Geotechnical Data Report-Draft Pre-Final Design, Thornton Water Project-Segments A, Phase 2, Thornton, CO. January 2022

Murphey et al. 2015.

Office of Archaeology and Historic Preservation (OAHP). 2021.

Standard & Poors. 2020.

Trimble and Machette. 1979.

University of Colorado Museum (UCM). 2021

Appendix A – Adams County Waivers and Responses to Thornton Variance Requests

Community & Economic Development Department
Development Services Division
4430 South Adams County Parkway,
1st Floor, Suite W2000
Brighton, CO 80601-8205
PHONE 720.523.6800 FAX 720.523.6967

MEMORANDUM

TO: Ryan Nalty, Interim Director of Community & Economic Development
Jen Rutter, Development Services Manager

FROM: Layla Bajelan, Long Range Planner II

SUBJECT: City of Thornton, Thornton Water Project Submittal Requiements

DATE: April 22, 2021

The City of Thornton ("City") is requesting to build a water pipeline that will convey water from the Water Supply and Storage Company facilities northwest of the City of Fort Collins to the City of Thornton for use in their domestic water supply. The 75-mile-long pipeline will be 42-inches in diameter. Twelve miles of pipeline will run through Adams County ("County"), with approximately 4.6 of the 12 miles being located in unincorporated Adams County.

Regulations governing Areas and Activities of State Interest, including Major extensions of existing Domestic Water and Wastewater Treatment Systems, (as described in Chapter 6 of the Adams County Development Standards and Regulations) would apply to all matters of state interest in the unincorporated areas of the County, requiring the applicant to receive an Areas and Activities of State Interest (AASI) Permit prior to commencing construction; however Section 6-16 of the Adams County Development Standards and Regulations allows for the applicant to enter into an Intergovernmental Agreement in lieu of the AASI Permit.

The Development Standards require that the applicant satisfy the purpose, intent, and standards of the AASI regulations prior to approval of the IGA. The City of Thornton is being required to submit all of the submittal documents for the AASI permit, however due to the IGA request, the County is willing to exempt the City from various submittal requirements, if they demonstrate that they have mitigated any impacts to the residents and property owners of Adams County or that they are not applicable to their request.

Section 6-07-02 outlines all of the application submittal requirements for an AASI Permit. The City of Thornton has requested the following submittal requirements be exempted from the submittal requirements for their IGA application. Along with their request, the City has included an explanation as to why the submittal requirement should be waived. The County response is included beneath the explanation.

6-07-02-03 INFORMATION DESCRIBING THE PROJECT

1. Detailed plans and specifications of the Project.

<u>City of Thornton Explanation:</u>

Thornton requests that Adams County confirm that this submittal requirement can be considered a condition precedent for construction as part of the Intergovernmental Agreement ("IGA"). Thornton will be constructing the Thornton Water Project between 168th Avenue and 84th Avenue in two non-concurrent packages. Requiring detailed plans and specifications prior to approval of the IGA would unnecessarily delay construction of the first package.

<u>Adams County Response:</u>

Adams County will require that the City of Thornton submit detailed plans and specification of the project at the time of submittal. This information will be required for the County to enter into an IGA with the City. Detailed construction plans can be submitted as a condition precedent.

6-07-02-04 PROPERTY RIGHTS, PERMITS AND OTHER APPROVALS

2. Copies of all official federal and State consultation correspondence prepared for the Project; a description of all Mitigation required by federal, State and local authorities; and copies of any draft or final environmental assessments or impact statement required for the Project.

<u>City of Thornton Explanation:</u>

Thornton requests that Adams County confirm that this submittal requirement can be considered a condition precedent for construction as part of the IGA. Thornton and its engineers and contractors will have correspondence with federal, state and local authorities, and will be determining appropriate mitigation, up to start of construction. The Project is being configured and designed to not require any federal environmental assessments or impact statements. Requiring this information prior to approval of the IGA would unnecessarily delay the Project.

<u>Adams County Response:</u>

The County will accept these submittal items as a Condition Precedent but reserves the right to request documentation during the review process that it deems necessary for a complete review and approval.

3. Description of the water to be used by the Project and alternatives, including the source, amount, the quality of such water, the Applicant's right to use the water, including adjudicated decrees, applications for decrees, proposed points of diversion, and the existing uses of water. If an augmentation plan has been filed in court, the applicant must submit a copy of that plan.

<u>City of Thornton Explanation:</u>

Thornton requests that Adams County waive this submittal requirement. The Project is the siting and construction of an underground water conveyance pipeline that will not itself "use" water.

Adams County Response:

Due to the nature of this request, the County will waive this requirement. The City of Thornton has previously received approvals for the water rights and the beginning and end storage facilities. This request will only be conveying water from one approved location to another.

4. Regional Water Quality Management Plan: Provisions of the regional Clean Water Plan, promulgated by the Denver Regional Council of Governments, that apply to the Project and assessment of whether the Project would comply with those provisions.

City of Thornton Explanation:

Thornton requests that Adams County waive this submittal requirement. The Project is the siting and construction of an underground water conveyance pipeline that has no wastewater impacts. In addition, the Denver Regional Council of Governments no longer has a regional Clean Water Plan.

Adams County Reponse:

Adams County will waive this requirement, as the water being conveyed is clean and meant for domestic use. In addition, the County acknowledges that the Denver Regional Council of Governments no longer has a Regional Clean Water Plan.

6-07-02-05 FINANCIAL FEASIBILITY OF THE PROJECT

City of Thornton Explanation:

Thornton requests that Adams County waive this submittal requirement. The City of Thornton operates a Water Utility Enterprise under the direction of the Thornton City Council. The Water Utility Enterprise funds its cost-of-service operations through rates and fees charged to the customers of the Water Utility Enterprise. The City Council has identified the funding required for the Project, and has established rates and fees to cover the expenses for the Project, as well as the capital and operating expenses of the remainder of the Water Utility Enterprise.

Adams County Response:

The County will require that the applicant submit the documentation that the City Council approved when identifying the funding required for the Project.

6-07-02-07 LOCAL GOVERNMENT SERVICES

Adams County response:

Adams County has waived this submittal requirement per March 12, 2021 email from Layla Bajelan.

6-07-02-08 FINANCIAL BURDEN ON COUNTY RESIDENTS

City of Thornton Explanation:

Thornton requests that Adams County waive this submittal requirement. The Project will not impact the tax burden or fee structure for any government services except municipal water supply, and then only for those water customers that are within the service area of Thornton's water utility (primarily within the city limits of Thornton). Adams County residents that are located within Thornton's water utility's service area and that receive water service from Thornton are subject to rates and fees established by the Thornton City Council.

Adams County Response:

Adams County will waive this requirement, as the only residents that will be financially impacted by this project are within the City of Thornton water utility service area and are already subject to the fees and rates of the Council. The pipeline itself will not impact taxes or rates on citizen in unincorporated areas

6-07-02-09 LOCAL ECONOMY

Adams County Response:

Adams County has waived this submittal requirement per March 12, 2021 email from Layla Bajelan.

6-07-02-10 RECREATIONAL OPPORTUNITIES

Adams County Response:

Adams County has waived this submittal requirement per March 12, 2021 email from Layla Bajelan.

6-07-02-11 ENVIRONMENTAL IMPACT ANALYSIS

b. Visual Quality.

City of Thornton Explanation:

Thornton requests that Adams County waive this submittal requirement. The pipeline will be buried, and visual impacts during construction will be temporary.

Adams County Response:

Adams County will require the applicant to demonstrate that the visual impacts of the project construction will be addressed during construction of the pipeline.

6-07-02-12 REFERRALS TO OUTSIDE AGENCIES, RESPONSE TO REFERRAL COMMENTS AND NEIGHBORHOOD / SCOPING MEETING

City of Thornton Explanation:

Section 6-16 Intergovernmental Agreements does not specify referrals to outside agencies as part of the process. Thornton requests that Adams County confirm whether referrals to outside agencies will be required as part of IGA process.

Adams County Response:

Section 2-01-05 of the Adams County Development Standards and Regulations, the County is required to send out notices to all applicable referral agencies within a 3-mile buffer from the subject site. The IGA is being considered in lieu of the AASI permit, however the noticing requirement will still be applicable, as the IGA will be heard by the Board of County Commissioners.

6-08-01 MAJOR WATER AND SEWER PROJECTS

City of Thornton Explanation

Thornton requests that Adams County waive this submittal requirement. Consolidating Thornton's Water Utility Enterprise with other municipal water supply systems or agencies is not feasible. Thornton's water system has been designed and built since the early 1960's to serve only customers within the water utility's service area, and Thornton's water rights are not useable outside the water utility's service area. Other area water supply agencies do not have the capacity or water supply to serve Thornton's needs. The Project is not a sewer project.

Adams County Response:

Adams County will waive this requirement per the applicant's explanation.

Signature (approve): _____

Jen Rutter
Development Services Manager

Signature (approve): _____

Ryan Nalty
Interim Director of Community & Economic Development

From: Layla Bajelan <LBajelan@adcogov.org>
Sent: Wednesday, March 17, 2021 6:17 PM
To: Mark Koleber <Mark.Koleber@thorntonco.gov>; Eduardo Moreno <Eduardo.Moreno@thorntonco.gov>
Subject: PRE2021-00013; Thornton Water Project Follow Up

Good afternoon,

I met with Jen Rutter this morning and she will reply back to your email directly for the exemption consideration for the Hammer Connection Project. She is willing to consider it exempt. We are reaching out to the County Attorneys Office on how to proceed with the required meeting. Per the Code, we are to notify all referral agencies within 3 miles of the project. There are several HOAs and Metro Districts that would be included in the list, but it would not affect them. We are getting confirmation on if it needs to be all the referral agencies or only the referral agencies that would be affected by this proposal.

To move forward on the IGA for the Thornton Water Project Pipeline, you will need to submit the AASI permit application. The IGA will be processed in lieu of the AASI and this was the process in which we approved them. I went through the submittal requirements and you will not have to provide submittal checklist items number 18, 20, and 21. I have attached the application submittal checklist to this email. Section 6-07-02 outlines all of the submittal requirements in detail. If the applicant feels that other submittal requirements are not applicable to this project, we will accept a written explanation as to why it is not applicable.

Please let me know if you have any questions.

Thanks,

Layla Bajelan
Long Range Planner II, *Community and Economic Development*
ADAMS COUNTY, COLORADO
4430 S. Adams County Parkway, 1st Floor, Suite W2000A
Brighton, CO 80601
720.523.6863| *LBajelan@adcogov.org* | www.adcogov.org

** New Schedule: Tuesday-Friday 7 a.m. to 5:30 p.m.**

County operating hours: Tuesday through Friday, 7 a.m. to 5:30 p.m.

Appendix B – Conceptual Review Meeting Comments (Preliminary)

Community & Economic
Development Department
Development Services Division
www.adcogov.org

ADAMS COUNTY
COLORADO

4430 South Adams County Parkway
1st Floor, Suite W2000B
Brighton, CO 80601-8218
PHONE 720.523.6800
FAX 720.523.6967

Development Review Team Comments- Preliminary

Date: March 5, 2021
Project Number: PRE2021-00013
Project Name: Thornton Water Project

Note to Applicant:
The following review comments and information from the Development Review Team is based on the information you submitted for the Conceptual Review meeting and presented at the meeting. The Development Review Team review comments may change if you provide different information during a land use submittal/ building permit. Please contact the case manager if you have any questions.

Also, please note where "Section" is referenced, it is referring to the appropriate section of the Adams County Development Standards and Regulations.

Your conceptual review meeting will be held on ***Friday, March 12, 2021 from 9:45 a.m. to 10:30 a.m.***

Commenting Division: Development Services, Planning
Name of Reviewer: Layla Bajelan, Planner II- Long Range Planning
Email: LBajelan@adcogov.org / 720-523-6863

PLN01: Request
The City of Thornton (Thornton) hereby requests a Conceptual Review Meeting to discuss and get feedback from Adams County staff regarding the Thornton Water Project (TWP) and the Hammer Connection Project.

PLN02: AASI Permit
Section outlines what uses are required to obtain an AASI permit. 6-06-01 Permit Required
A Permit is required to be obtained pursuant to these Regulations in order to conduct any of the following Activities of State Interest (unless otherwise exempted by these Regulations):

1. Site selection and construction of Major New Domestic Water Treatment Systems and Major New Domestic Sewage Treatment Systems.
2. Major extensions of existing Domestic Water and Wastewater Treatment Systems.
3. Site selection and construction of Major Facilities of a Public Utility.
4. Site selection of Airports.
5. Site selection of Arterial Highways, Interchanges and Collector Highways.
6. Site selection of Rapid or Mass Transit Facilities, Stations or Terminals or Fixed Guideways ("Rapid or Mass Transit Facilities").

- **This request meets the "Major extensions of existing Domestic Water and Wastewater Treatment Systems"**

PLN03: Exemptions
Exemptions from the AASI permit can be found in Section 6-04-01. 2. Specific Exemptions. The provisions of these regulations shall not apply to any of the following:

The construction or extension of a water distribution system, domestic water system, municipal or industrial water project, water supply system, water treatment plant, or major new domestic water treatment system with pipelines that do not exceed a maximum of 36 inches in diameter.
Projects that fall within this category with pipelines that are 36 inches in diameter or smaller shall request a pre-application meeting to have the Community and Economic Development Director conduct a review to determine applicability pursuant to Section 06-07-01-02. All districts within three (3) miles of the proposed project shall be invited to the Conceptual Review meeting and shall be notified of the decision regarding applicability. If the Community and Economic Development Director determines that and Areas and Activities of State Interest permit is required due to the impacts of the proposed project, the applicant shall submit an AASI application in accordance with the procedures outlined in Section 6-07, Permit Application Process.

- **The County would not consider this as exempt, as the piping through the entirety of the project is not less than 36 inches.**

PLN04: Submittal Requirements
Please refer to section 6-07-02 for all submittal requirements for the AASI Permit.

PLN05: Additional Submittal Requirements
Section 6-08-01 outlines the additional major water and sewer projects submittal requirements.

PLN06: Staff Discussion
Adams County has determined that this request would be required to apply for an AASI permit to permit the water pipeline. Adams County, in past applications, has allowed municipalities to enter into an Intergovernmental Agreement (IGA) for similar uses in lieu of an AASI permit. Please refer to Section 6-16 for the IGA process and requirements. I have attached them to this document. For this process, County staff will identify which AASI submittal requirements are relevant to your project and a similar process would occur. This request would be heard in front of the Adams County Board of County Commissioners and would follow the criteria of approval for the AASI permit. We can discuss more at the meeting on whether The City of Thornton would like to pursue this route. If so, staff can work on identifying which submittal documents are relevant to this application and provide more information on the IGA process. The County would request more detailed maps at the time of submittal. It is difficult to read the maps when zooming in on the aerials. In addition, we will need a list of all the parcel number that will be affected by this water pipeline.

PLN07: **Neighborhood Meeting**

A Neighborhood Meeting is required with this request. The applicant shall refer to Section 2-01-02 for all meeting requirements. Due to the COVID-19 Pandemic, all meetings should be held virtually. Please see the attached memo from the County Attorneys Office on guidance.

PLN08: Criteria of Approval

Please refer to Section 6-17 for the Criteria of Approval.

6-17-01 GENERAL APPROVAL CRITERIA

1. Documentation that prior to site disturbance associated with the Proposed Project, the Applicant can and will obtain all necessary property rights, permits and approvals. The Board may, at its discretion, defer making a final decision on the application until outstanding property rights, permits and approvals are obtained or the Board may grant a Permit with conditions and/or conditions precedent which will adequately address outstanding concerns.
2. The Proposed Project considers the relevant provisions of the regional water quality plans.
3. The Applicant has the necessary expertise and financial capability to develop and operate the Proposed Project consistent with all requirements and conditions.
4. The Proposed Project is technically and financially feasible.
5. The Proposed Project is not subject to significant risk from Natural Hazards.
6. The Proposed Project is in general conformity with the applicable comprehensive plans.
7. The Proposed Project does not have a significant adverse effect on the capability of local government to provide services or exceed the capacity of service delivery systems.
8. The Proposed Project does not create an undue financial burden on existing or future residents of the County.
9. The Proposed Project does not significantly degrade any substantial sector of the local economy.
10. The Proposed Project does not unduly degrade the quality or quantity of recreational opportunities and experience.
11. The planning, design and operation of the Proposed Project reflects principals of resource conservation, energy efficiency and recycling or reuse.
12. The Proposed Project does not significantly degrade the environment. Appendix A includes the considerations that shall be used to determine whether there will be significant degradation of the environment. For purposes of this section, the term environment shall include:
    a. Air quality.
    b. Visual quality.
    c. Surface water quality.
    d. Groundwater quality.
    e. Wetlands, flood plains, streambed meander limits, recharge areas, and riparian areas.
    f. Terrestrial and aquatic animal life.
    g. Terrestrial and aquatic plant life.
    h. Soils and geologic conditions.

13. The Proposed Project does not cause a nuisance and if a nuisance has been determined to be created by the Proposed Project the nuisance has been mitigated to the satisfaction of the County.

14. The Proposed Project does not significantly degrade areas of paleontological, historic, or archaeological importance.
15. The Proposed Project does not result in unreasonable risk of releases of hazardous materials. In making this determination as to such risk, the Board's consideration shall include:
    a. Plans for compliance with federal and State handling, storage, disposal and transportation requirements.
    b. Use of waste minimization techniques.
    c. Adequacy of spill prevention and counter measures, and emergency response plans.
16. The benefits accruing to the County and its citizens from the proposed activity outweigh the losses of any resources within the County, or the losses of opportunities to develop such resources.
17. The Proposed Project is the best alternative available based on consideration of need, existing technology, cost, impact and these Regulations.
18. The Proposed Project shall not unduly degrade the quality or quantity of agricultural activities.
19. The proposed Project does not negatively affect transportation in the area.
20. All reasonable alternatives to the Proposed Project, including use of existing rights-of-way and joint use of rights-of-way wherever uses are compatible, have been adequately assessed and the Proposed Project is compatible with and represents the best interests of the people of the County and represents a fair and reasonable utilization of resources in the Impact Area.
21. The nature and location of the Proposed Project or expansion will not unduly interfere with existing easements, rights-of-way, other utilities, canals, mineral claims or roads.
22. Adequate electric, gas, telephone, water, sewage and other utilities exist or shall be developed to service the site.
23. The proposed project will not have a significantly adverse Net Effect on the capacities or functioning of streams, lakes and reservoirs in the impact area, nor on the permeability, volume, recharge capability and depth of aquifers in the impact area.
24. If the purpose and need for the Proposed Project are to meet the needs of an increasing population within the County, the area and community development plans and population trends demonstrate clearly a need for such development.
25. The Proposed Project is compatible with the surrounding area, harmonious with the character of the neighborhood, not detrimental to the immediate area, not detrimental to the future development of the area, and not detrimental to the health, safety, or welfare of the inhabitants of the area.

Additional Criteria of Approval for Major Water and Sewer Projects (Section 6-17-02-01)

1. To the extent practicable, Domestic Water and Wastewater Treatment Systems will be consolidated with existing facilities within the area. The determination of whether consolidation is practicable shall include but not be limited to the following considerations:
    a. Distance to and capacity of nearest Domestic Water or Wastewater Treatment System.
    b. Technical, legal, managerial and financial feasibility of connecting to existing Domestic Water or Wastewater Treatment System.

c. Scope of the Service Area for existing Domestic Water or Wastewater Treatment System.
d. Projected growth and development in the Service Area of existing Domestic Water or Wastewater Treatment System.

2. The Proposed Project will not result in duplicative services within the County.
3. The Proposed Project will be constructed in areas that will result in the proper utilization of existing treatment plants and the orderly development of domestic water and sewage treatment systems of adjacent communities.
4. If the Proposed Project is designed to serve areas within the County, it will meet community development and population demands in those areas.
5. The Proposed Project emphasizes the most efficient use of water, including the recycling, reuse and conservation of water.
6. The Applicant demonstrates sufficient managerial expertise and capacity to operate the facility.

Commenting Division: Development Services, Engineering:
Name of Review: Matt Emmens, Senior Engineer
Email: MEmmens@adcogov.org **/ 720-523-6826**

ENG1: It appears that the project crosses various floodplains. Depending upon construction techniques and the presence of surface structures, the applicant may be required to obtain a floodplain use permit. It is recommended that the applicant provide the alignment of the pipeline in Adams County superimposed with the data from all relevant floodplains.

Potential flood plains are shown on:

Flood Insurance Rate Maps *FIRM Panels 08001C0025H, 08001C0307H, 08001C0309H, 08001C0317H, 08001C0316H , 08001C0318H, 08001C0606H, and 08001C0602H* Published by the Federal Emergency Management Agency, January 204, 2016

ENG2: The project is located within the boundaries of the following regional drainage studies:

*Todd Creek & DFA 0052 OSP, P*repared for City of Thornton, Adams County, and Urban Drainage and Flood Control District. Prepared by Kiowa Engineering, December 2003.

Brantner Gulch Northern Tributary Watersheds MDP, Prepared for City of Thornton, Adams County and Urban Drainage and Flood Control District. Prepared by Kiowa Engineering Corp., April 1998.

Brantner Gulch MDP, Prepared for City of Thornton, Adams County and Urban Drainage and Flood Control District. Prepared by Sellards & Griggs, Inc., June 1983.

Direct Flow Area 0054, Prepared for City of Thornton, Adams County and Urban Drainage and Flood Control District. Prepared by Merrick and Company, October 1980.

South Platte River MDP, Prepared for City of Brighton, Commerce City, Denver Water Department, Metro Wastewater, reclamation District, City of Thornton, South Adams County Water and Sanitation District, Adams County, and Urban Drainage and Flood Control District. Prepared by Camp Dresser & McKee Inc., April 2002.

For the regional drainage facilities mentioned in the studies listed above, it is recommended that the applicant either avoid them or install the line to a depth below the facility to provide sufficient cover and avoid potential utility conflicts. Show these regional facilities on the plans.

ENG3: The applicant shall be responsible to ensure compliance with all Federal, State, and Local water quality construction requirements. The project site is within the County's MS4 Stormwater Permit area. In the event that the disturbed area of the site exceeds 1 acre, or disturbing less than 1 acre but belonging to a larger subdivision (over 1 acre), the applicant shall be responsible to prepare the SWMP plan using the Adams County ESC Template, and obtain both a County SWQ Permit and State Permit COR400000.

ENG4: All necessary paperwork such as Commissioners Resolutions, Development Agreements, Collateral Agreements, BOA decisions, easements, etc. will be on file with the Adams County Department of Public Works / Construction Management Section prior to the issuance of any construction or building permits.

ENG5: The Adams County boundaries are not clearly identified on any of the construction plan sheet. Jurisdictional boundaries need to be identified with ownership labels on either side of the boundary line. This information should be included on any future submittals to the County.

ENG6: The project appears to cross several irrigation ditches. It is recommended that the applicant either avoid them or contact the irrigation company directly and discuss crossing requirements.

ENG7: The pipeline appears to cross several Adams County roadways and properties.
<u>Condition of Approval:</u>
In the event that Adams County performs a roadway or drainage project that requires adjustment or relocation of the pipe line within the right-of-way, the Public Works Department will require that the applicant perform any adjustments or relocations, at their own expense, upon receiving notification from the County. The County may enter into an Intergovernmental Agreement (IGA) with the District to facilitate any pipeline adjustments or relocations.

ENG8: The applicant will be required to obtain Adams County construction permits for any crossing of Adams County road Right-of-Ways or, easements or properties owned by Adams County. Adams County prefers that all roadway crossing be done perpendicular to the County ROW. Any non-perpendicular crossing must be pre-approved by County Staff.

ENG9: Adams County only allows public service utilities to be located within the County's ROW, except for perpendicular crossings. Transmission lines must be located outside of the ROW.

ENG10: Pipelines running parallel to Adams County road Right-of-Way must be located outside of all current and future road Right-of-way's (ROW).

ENG11: Adams County generally does not allow full street closures. One lane of traffic flow must be kept open. Any proposed full street closures will need to be preapproved by County Staff. The County prefers that street crossings be bored, to avoid conflicts with vehicular traffic on roadway.

Commenting Division: Development Services, Right-of-Way Agent
Name of Review: David Dittmer
Email: DDittmer@adcogov.org / 720-523-6811

No comment

Commenting Division: Environmental Programs Manager
Name of Review: Katie Keefe
Email. KKeefe@adcogov.org / **720-523-6986**

ENV1. Please provide a nuisance control plan for construction operations that covers off-site impacts including fugitive dust, noise, tracking, and lighting.

Commenting Division: Building Safety Division, Chief Building Official
Name of Review: Justin Blair
Email. JBlair@adcogov.org / **720-523-6843**

BSD1- Building permits would be required for structures. Engineered plans will be required to obtain permits.
BSD2- Applicant should refer to commercial and industrial submittal requirements.
BSD3- Current adopted codes are the 2018 International Building Codes and the 2017 National Electrical Code.
BSD4- Applicant should contact Fire Department for their requirements.

6-16 INTERGOVERNMENTAL AGREEMENTS

In lieu of a permit application and review as provided by these regulations, the County, at its sole discretion, may elect to negotiate an intergovernmental agreement with the State of Colorado or a political subdivision of the State as defined by Section 29-1-202(1), C.R.S. for activities of state interest. The County encourages intergovernmental agreements to promote mutually beneficial relationships and effectively address areas and activities of state interest. In the event such an intergovernmental agreement is approved by the Board of County Commissioners, the intergovernmental agreement shall be deemed to satisfy all requirements of these regulations and an AASI Permit shall be issued provided that all of the following conditions are met:

1. The state or political subdivision and the County must both be authorized to enter into the intergovernmental agreement.

2. The purpose, intent, and applicable criteria of Section 24-65.1-101, et seq., C.R.S. and of these regulations must be satisfied by the terms of the intergovernmental agreement.

3. A neighborhood/scoping meeting shall be held by the Applicant, and a summary addressing the concerns of the neighborhood shall be submitted by the Applicant to the Community and Economic Development Department which shall include, but is not limited to, the names, addresses, telephone numbers, and concerns. The neighborhood/scoping meeting summary shall be submitted to the Community and Economic Development Department along with a presubmittal meeting application prior to the scheduling of a public hearing. The boundaries of the residents notified for the neighborhood/scoping meeting shall be determined by the Community and Economic Development Director or designee and shall not be less than 500 feet from the property lines of the location of the Proposed Project.

4. A public hearing must be conducted by the Board to publicly review and approve the proposed intergovernmental agreement. Notice of the public hearing shall be published once at least 30 and not more than 60 days prior to the hearing in a newspaper of general circulation in the County. Property owners within a minimum of 500 feet from the property lines of the location of the Proposed Project shall be notified by the Community and Economic Development Department of the date and time of the public hearing not less than 14 calendar days prior to the Board of County Commissioners hearing date.

5. Both the Board and the governing body of the State or political subdivision must approve the intergovernmental agreement in the manner required by the

Colorado Constitution, state statutes, and any applicable charter, ordinance or resolution.

6. Exercise of the provisions of this section 6-16 by the State or political subdivision shall not prevent the entity from electing at any time to proceed under the permit provisions of these regulations.

7. Nothing in this section 6-16 shall be construed to waive the applicability of these regulations or to create in the State or any political subdivision a right or interest to an intergovernmental agreement with the County.

ADAMS COUNTY
COLORADO

Memorandum

To: Jill Jennings Golich, Director of Community and Economic Development
From: Christy Fitch, Assistant County Attorney
CC: Jen Rutter, Development Services Manager
Re: Neighborhood Meeting Guidance, COVID-19
Date: March 27, 2020

Background
COVID-19 has required the County to be flexible in regards to certain in person requirements in the County's Development Standards and Regulations (ACDS&R) to ensure that we are doing our part in preventing the spread of the virus. Given this emergency state, the County is releasing new guidance to ensure that the neighborhood meetings are still held, but in a unique and virtual way. This will ensure social distancing is practiced while also incorporating an important part of all development, the neighborhoods.

Section 2-01-02-01 of the ACDS&R states that the purpose of a neighborhood meeting is to present the development concept to citizens to identify, list, and discuss issues related to the development proposal. Through this guidance, the County will ensure that the purpose of the neighborhood meeting is being met in these unprecedented times.

Guidance
Meeting Requirements, Section ACDS&R § 2-01-02-03-01

- All neighborhood meetings shall be held virtually through a conference call or video chat meeting.
- The applicant shall provide the information for the meeting with the written notice as required in ACDS&R § 2-01-02-04-01.
- Development materials explaining the proposal shall be made available to the public, either through the written notice, or online. If provided online, the written notice shall include a link to the website where the materials can be found. The materials shall include, at minimum, maps of the development site, site plans, and architectural elevation drawings as required in ACDS&R § 2-01-02-06.
- The meeting must still meet the requirements of ACDS&R § 2-01-02-06, Format of the Meeting. The applicant shall be available to answer questions through the platform provided. The applicant can choose to receive questions prior to the neighborhood meeting, but this must be communicated through the written notice to the neighborhood.

Except as altered by this guidance, all other requirements of the neighborhood meeting as outlined in the ACDS&R shall be met. This guidance will be in effect until rescinded by the Director of Community and Economic Development.

Appendix C – Development Application Form and AASI Checklist

Community & Economic
Development Department
www.adcogov.org

ADAMS COUNTY
COLORADO

4430 South Adams County Parkway
1st Floor, Suite W2000
Brighton, CO 80601-8204
PHONE 720.523.6800
FAX 720.523.6998

Application Type:

☐ Conceptual Review	☐ Preliminary PUD	☐ Temporary Use
☐ Subdivision, Preliminary	☐ Final PUD	☐ Variance
☐ Subdivision, Final	☐ Rezone	☐ Conditional Use
☐ Plat Correction/ Vacation	☐ Special Use	☒ Other: Thornton Segment A Waterline

PROJECT NAME: Segment A Waterline, Thornton Water Project

APPLICANT

Name(s): City of Thornton Phone #: 720-977-6220

Address: 12450 Washington Street

City, State, Zip: Thornton, CO 80241

2nd Phone #: 720-977-6700 Email: Brett.Henry@ThorntonCO.gov

OWNER

Name(s): City of Thornton Phone #: 720-977-6220

Address: 12450 Washington Street

City, State, Zip: Thornton, CO 80241

2nd Phone #: 720-977-6700 Email: Brett.Henry@ThorntonCO.gov

TECHNICAL REPRESENTATIVE (Consultant, Engineer, Surveyor, Architect, etc.)

Name: Bill.Wemmert, AECOM Phone #: 303-478-7343

Address: 7595 Technology Way, Suite 200

City, State, Zip: Denver, CO 80237

2nd Phone #: Email: bill.wemmert@aecom.com

DESCRIPTION OF SITE

Address:	Pipe alignment generally from 168th Ave and Quebec to 87th Ave and Colorado Blvd
City, State, Zip:	Thornton, CO and Adams County, CO
Area (acres or square feet):	n/a
Tax Assessor Parcel Number	varies
Existing Zoning:	varies
Existing Land Use:	varies
Proposed Land Use:	No Change

Have you attended a Conceptual Review? YES [X] NO [ ]

If Yes, please list PRE#: PRE2021-00013

I hereby certify that I am making this application as owner of the above described property or acting under the authority of the owner (attached authorization, if not owner). I am familiar with all pertinent requirements, procedures, and fees of the County. I understand that the Application Review Fee is non-refundable. All statements made on this form and additional application materials are true to the best of my knowledge and belief.

Name: Brett E. Henry Date: 1/28/2022

Owner's Printed Name

Name: DocuSigned by: Brett Henry B79224F6FC56419...

Brett E. Henry, Executive Director-Infrastructure

Owner's Signature

Community & Economic
Development Department
www.adcogov.org

ADAMS COUNTY
COLORADO

4430 South Adams County Parkway
1st Floor, Suite W2000
Brighton, CO 80601-8204
PHONE 720.523.6800
FAX 720.523.6998

AREAS AND ACTIVITY OF STATE INTEREST (1041)

Application submittals must include all documents on this checklist as well as this page. Please use the reference guide (pg. 3) included in this packet for more information on each submittal item.

All applications shall be submitted electronically to epermitcenter@adcogov.org. If the submittal is too large to email as an attachment, the application may be sent as an unlocked OneDrive link. Alternatively, the application may be delivered on a flash drive to the One-Stop Customer Service Center. All documents should be combined in a single PDF. Once a complete application has been received, fees will be invoiced and payable online at https://permits.adcogov.org/CitizenAccess/.

- ☑ 1. Development Application Form (pg. 5)
- ☑ 2. Application Fees (see table pg. 2)
- ☑ 3. Written Explanation of the Project
- ☑ 4. Site Plan Showing Proposed Development
- ☑ 5. Proof of Ownership (title policy dated within 30 days of submittal)
- ☐ 6. Proof of Water and Sewer Services
- ☐ 7. Proof of Utilities (e.g electric, gas)
- ☑ 8. Neighborhood Meeting Summary
- ☐ 9. Legal Description
- ☐ 10. Certificate of Taxes Paid
- ☐ 11. Certificate of Notice to Mineral Estate Owners/and Lessees(pg. 7)
- ☐ 12. Certificate of Surface Development (pg. 8-10)

*Refer to **Section 6-07-02** of the Development Standards and Regulation for items below:*

- ☑ 13. Information Describing the Applicant
- ☑ 14. Information Describing the Project
- ☑ 15. Property Rights, Permits and Other Approvals
- ☑ 16. Financial Feasibility of the Project
- ☑ 17. Land Use
- ☑ 18. Local Government Services
- ☑ 19. Financial Burden on County Residents

continued on next page...

Community & Economic
Development Department
www.adcogov.org

ADAMS COUNTY
COLORADO

4430 South Adams County Parkway
1st Floor, Suite W2000
Brighton, CO 80601-8204
PHONE 720.523.6800
FAX 720.523.6998

☑ 20. Local Economy

☑ 21. Recreational Opportunity

☑ 22. Environmental Impact Analysis

Supplemental Items (if applicable)

☐ 1. Drainage Report

☐ 2. Traffic Impact Study

☑ 3. Erosion and Sediment Control Plans

☑ 4. Construction / Engineering Design Plans

Application Fees	Amount	Due
AASI Permit	$5,000 and cost of mailings	With application submittal
Tri-County Health	**$150 (TCHD Level 1)** $210 (TCHD Level 2) $360 (TCHD Level 3) $750 (TCHD Level 4)	With application submittal With application submittal
Drainage Report	$500	
Traffic Impact Study	$600	With application submittal
Erosion and Sediment Control Plans	$500	With application submittal
Construction Plans	$100	With application submittal

Appendix D – Figures of Segment A Alignments, Parcel IDs, Alignment Report

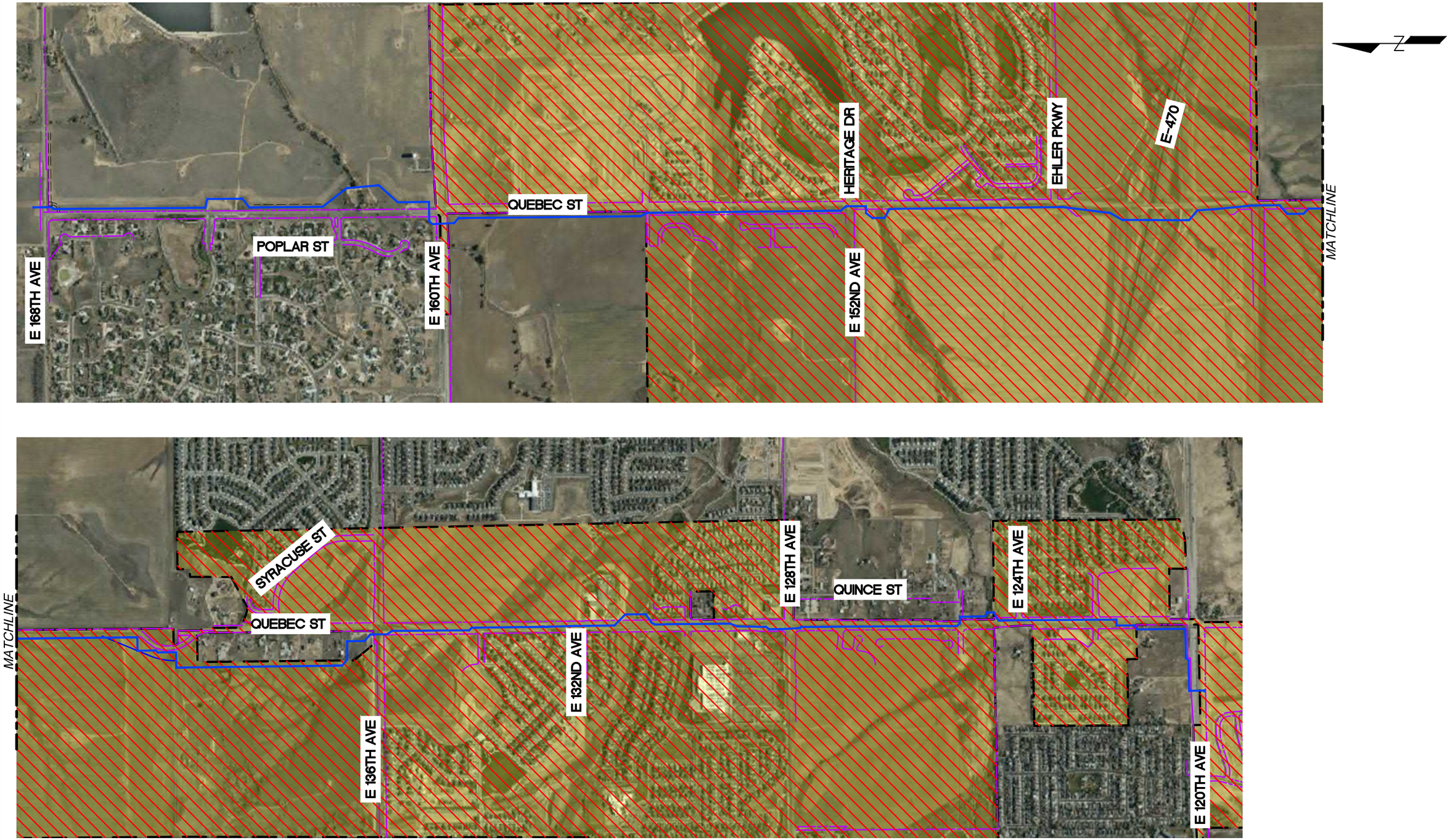

Last saved by: STEPHEN.MULLER(2022-01-21) Last Plotted: 2022-01-21
Filename: C:\PWWORKING\AECOM_DS20_NA_2019\STEPHEN.MULLER@AECOM.COM\D0105070\FIG-ADCO MAPS.DWG

THORNTON REACH
CITY OF THORNTON
Project No.: 12-777H5/60619101
Date: DEC 2021

Thornton WATER PROJECT

CITY OF THORNTON
SEGMENT A PIPELINE ALIGNMENT
PHASE I - 168TH AVENUE TO 120TH AVENUE
FIGURE 1 - AFFECTED ADAMS COUNTY PARCELS

LEGEND
PROPOSED WATER PIPELINE
THORNTON/ADAMS COUNTY BOUNDARY LINE
ROW
CITY OF THORNTON JURISDICTION

AECOM

FIGURE 1

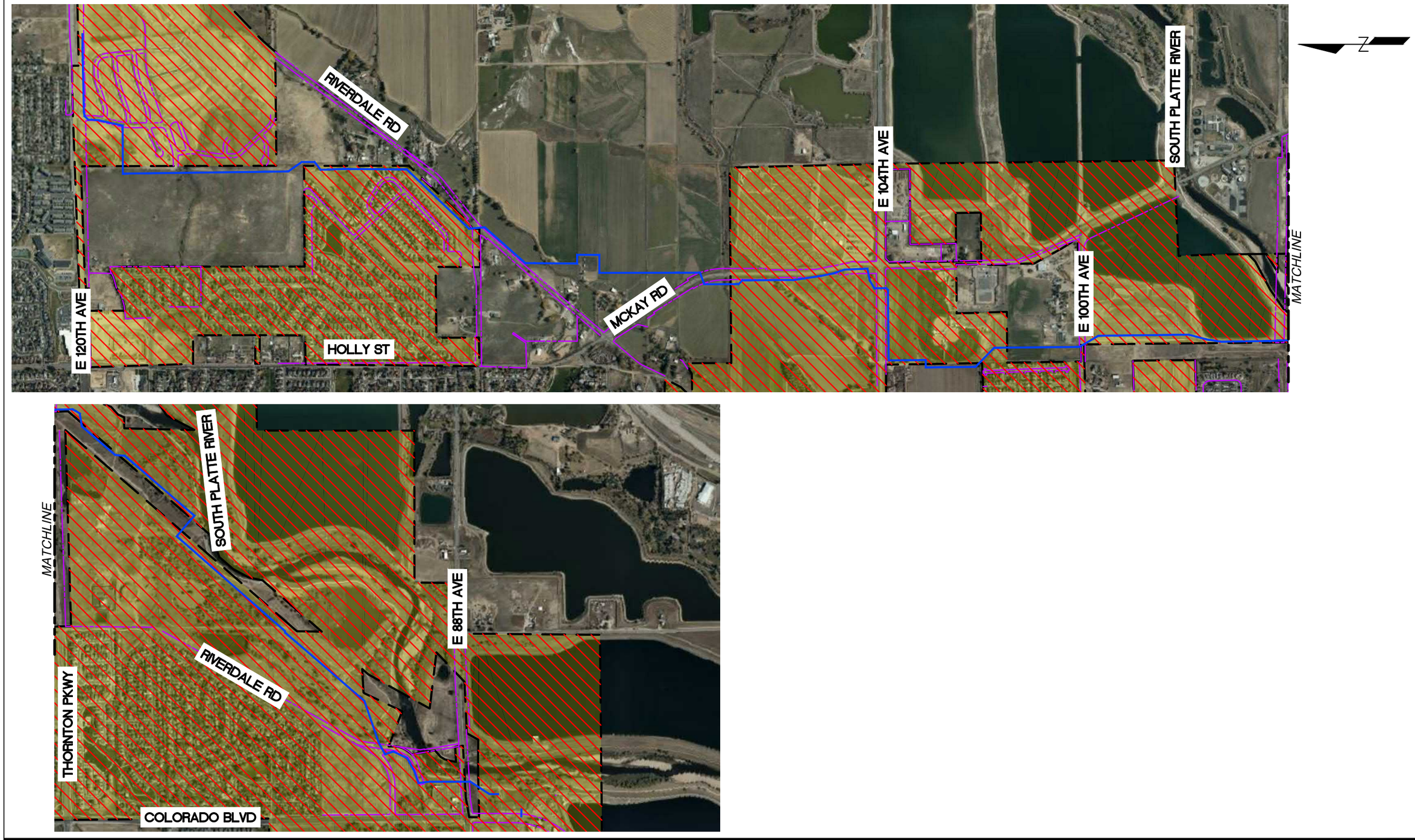

Last saved by: STEPHEN.MULLER(2022-01-21) Last Plotted: 2022-01-21
Filename: C:\PWWORKING\AECOM_DS20_NA_2019\STEPHEN.MULLER@AECOM.COM\D0105070\FIG-ADCO MAPS.DWG

THORNTON REACH
CITY OF THORNTON
Project No.: 12-777H5/60619101
Date: DEC 2021

Thornton WATER PROJECT

CITY OF THORNTON
SEGMENT A PIPELINE ALIGNMENT
PHASE II - 120TH AVENUE TO 88TH AVENUE
FIGURE 2 - AFFECTED ADAMS COUNTY PARCELS

LEGEND
- PROPOSED WATER PIPELINE
- THORNTON/ADAMS COUNTY BOUNDARY LINE
- ROW
- CITY OF THORNTON JURISDICTION

AECOM

FIGURE 2

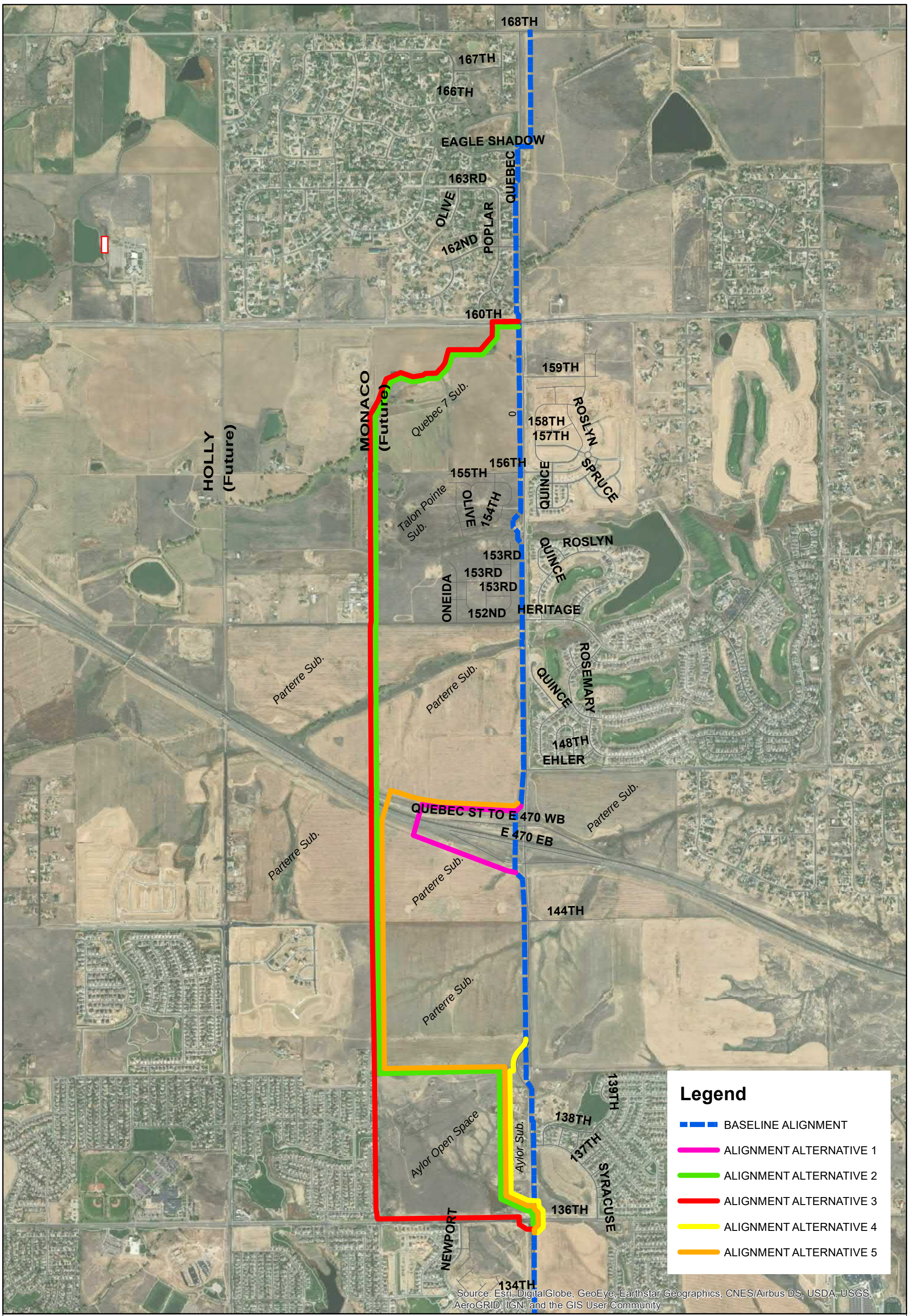

06/2020

N

Figure 3 - Phase I Alternative Alignments

1,600 800 0 1,600 Feet

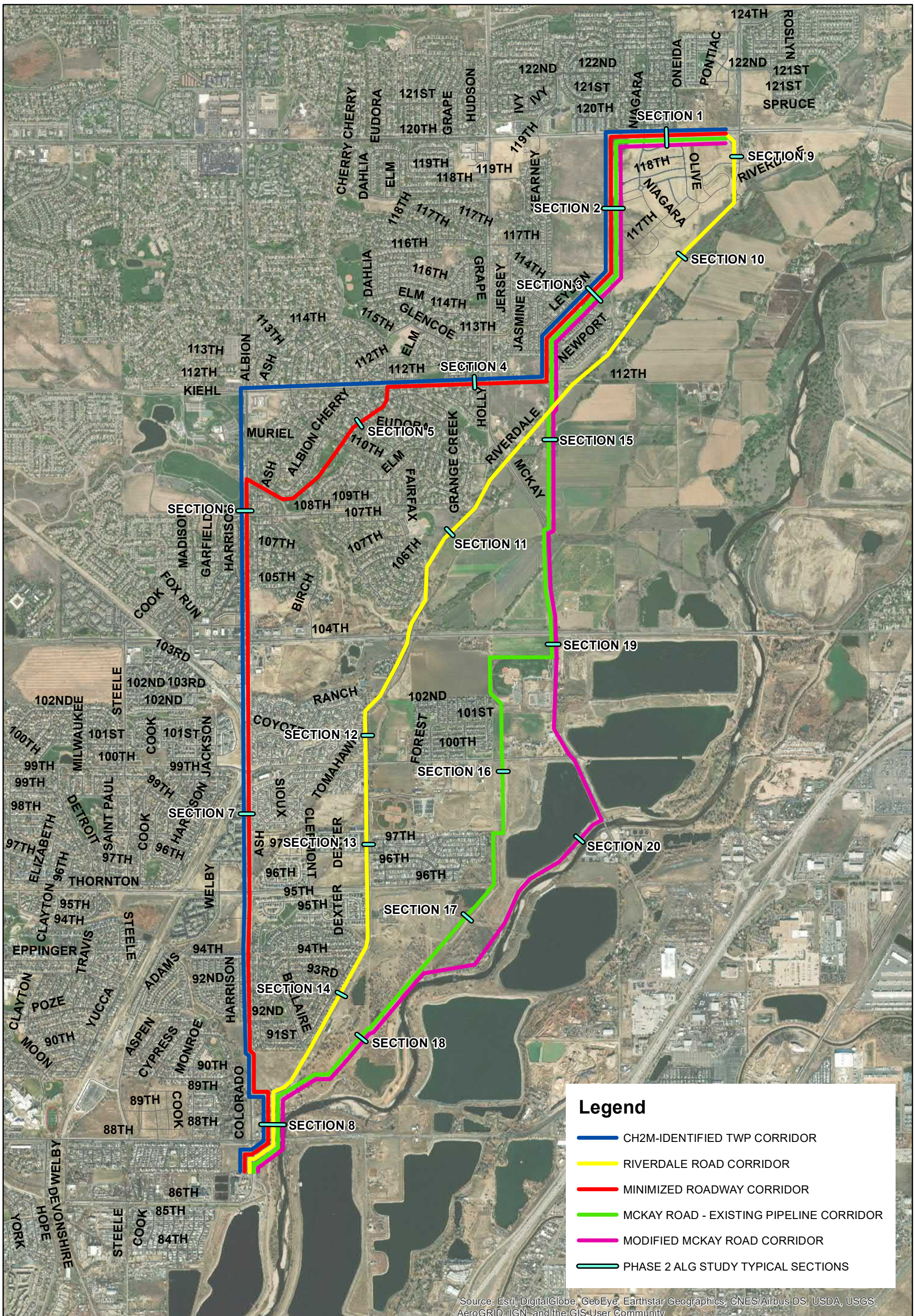

05/2020

N

Figure 4 - Phase II Alternative Alignments

2,000 1,000 0 2,000 Feet

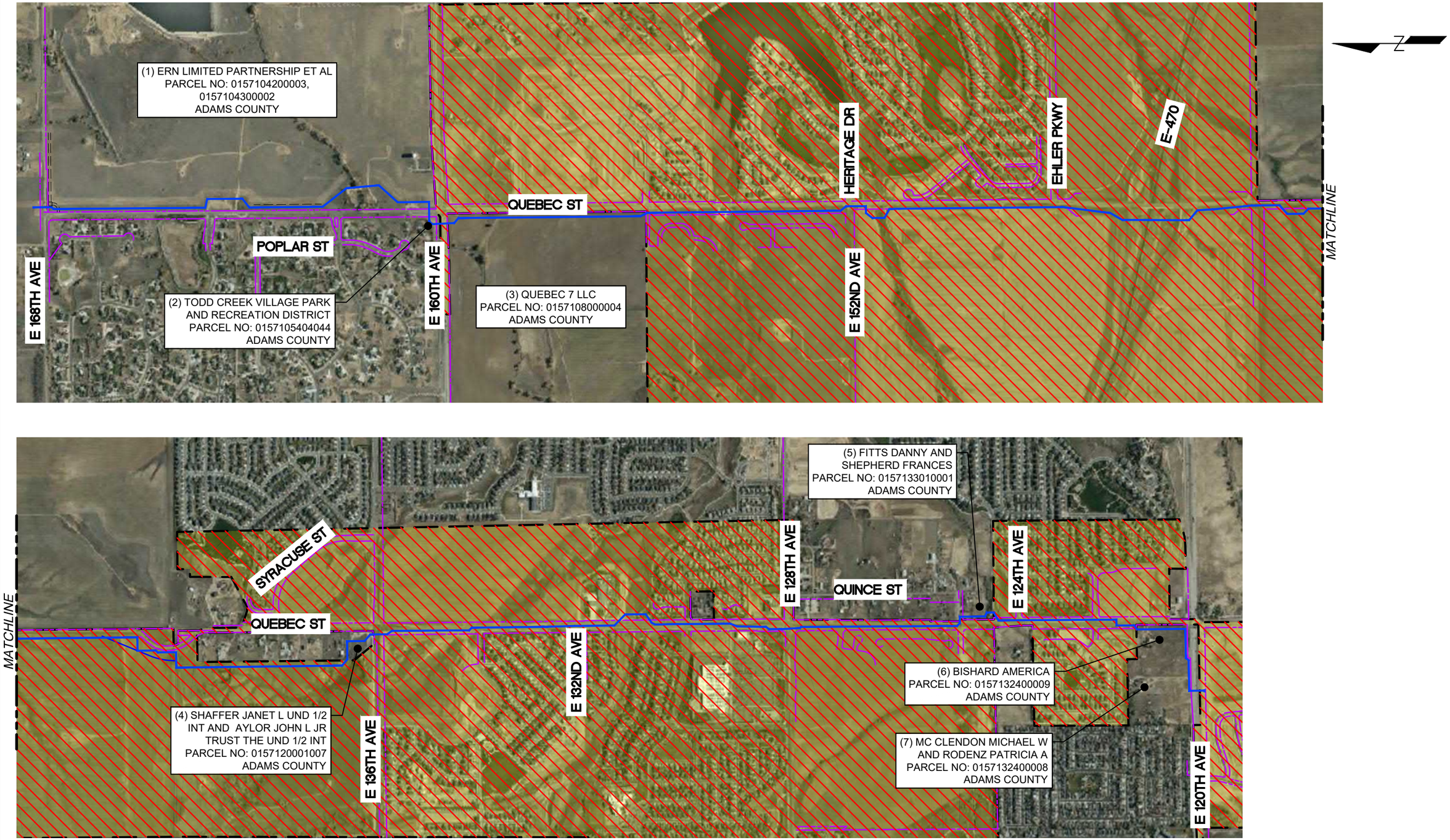

Last saved by: STEPHEN.MULLER(2022-01-21) Last Plotted: 2022-01-21
Filename: C:\PWWORKING\AECOM_DS20_NA_2019\STEPHEN.MULLER@AECOM.COM\D0105070\FIG-ADCO MAPS.DWG

THORNTON REACH
CITY OF THORNTON
Project No.: 12-777H5/60619101
Date: DEC 2021

Thornton WATER PROJECT

CITY OF THORNTON
SEGMENT A PIPELINE ALIGNMENT
PHASE I - 168TH AVENUE TO 120TH AVENUE
FIGURE 5 - AFFECTED ADAMS COUNTY PARCEL IDs

LEGEND
PROPOSED WATER PIPELINE
THORNTON/ADAMS COUNTY BOUNDARY LINE
ROW
CITY OF THORNTON JURISDICTION

AECOM

FIGURE 5

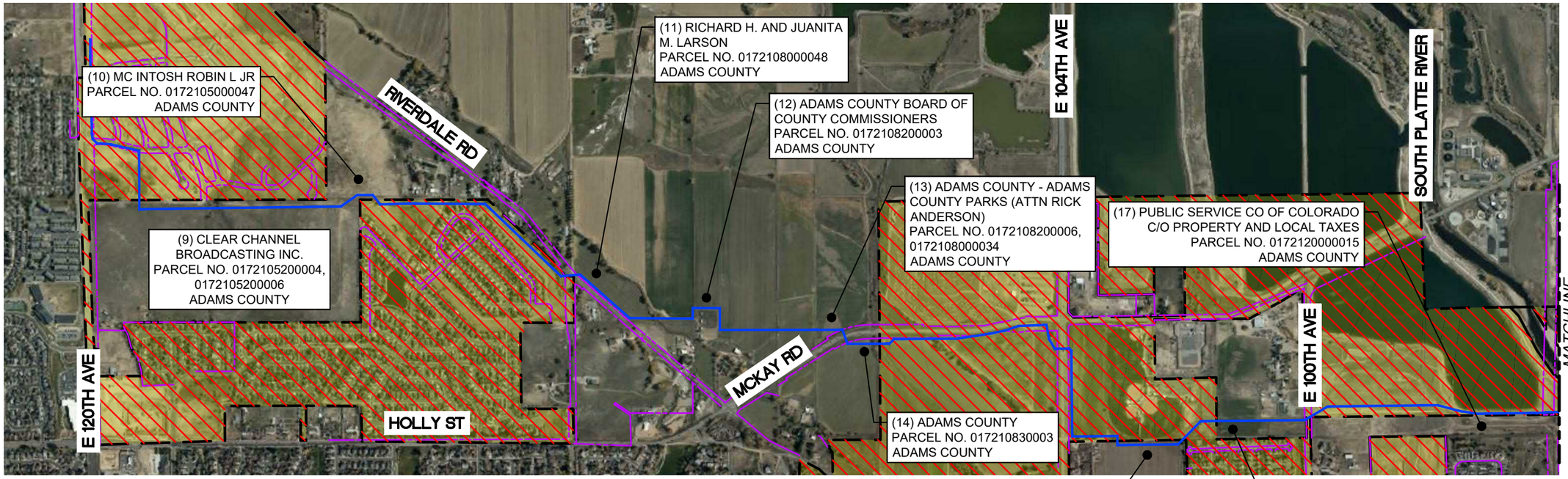

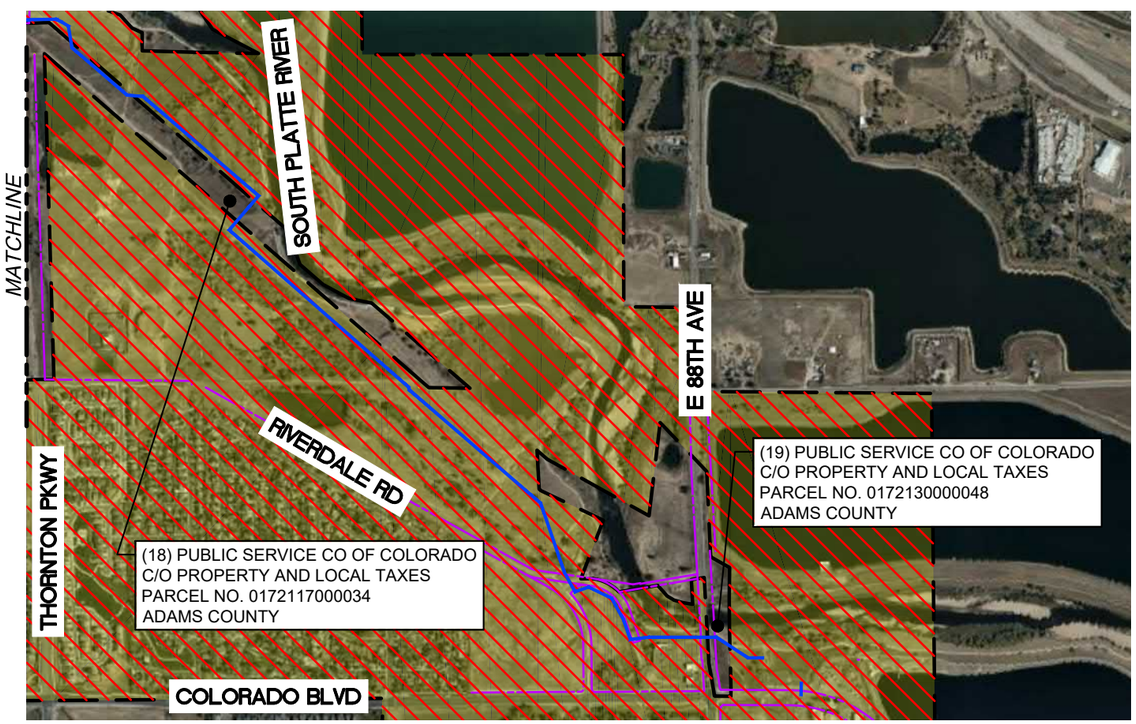

(15) LEON MIKE
PARCEL NO. 0172118100001
ADAMS COUNTY

(16) PUBLIC SERVICE CO OF COLORADO
C/O PROPERTY AND LOCAL TAXES
PARCEL NO. 0172117000014
ADAMS COUNTY

Last saved by: STEPHEN.MULLER(2022-01-21) Last Plotted: 2022-01-21
Filename: C:\PWWORKING\AECOM_DS20_NA_2019\STEPHEN.MULLER@AECOM.COM\D0105070\FIG-ADCO MAPS.DWG

THORNTON REACH
CITY OF THORNTON
Project No.: 12-777H5/60619101
Date: DEC 2021

Thornton WATER PROJECT

CITY OF THORNTON
SEGMENT A PIPELINE ALIGNMENT
PHASE II - 120TH AVENUE TO 88TH AVENUE
FIGURE 6 - AFFECTED ADAMS COUNTY PARCEL IDs

LEGEND
PROPOSED WATER PIPELINE
THORNTON/ADAMS COUNTY BOUNDARY LINE
ROW
CITY OF THORNTON JURISDICTION

AECOM

FIGURE 6

Thornton Water Project

Project No. 12-777H5

Thornton Reach

Thornton Water Project Pipeline Phase II Alignment Study – 120th Avenue to Wes Brown Water Treatment Plant

The City of Thornton

Project number: 60619101

AECOM

May 1, 2020

Note: The Segment A, Phase II Alignment Study was prepared in draft and supplemented with selected alignment updates, September 2020.

Quality Information

Prepared by	Checked by	Approved by
Jenna Crouch	Curt Thompson	Bill Wemmert

Revision History

Revision	Revision date	Details	Authorized	Name	Position

Distribution List

# Hard Copies	PDF Required	Association / Company Name

Prepared for:

The City of Thornton

Prepared by:

AECOM
6200 South Quebec Street
Greenwood Village, CO 80111

T: +1 (303) 694 2770
F: +1 (303) 694 3946
aecom.com

Table of Contents

Figures

Tables

Appendices

List of Acronyms

CH2M – CH2M Hill
HGL – Hydraulic Grade Line
McKay Road – McKay Road–Existing Pipeline
O&M – Operations and Maintenance
ROW – Right-of-Way
Thornton - City of Thornton
TM – Technical Memorandum
TWP – Thornton Water Project
Thornton WTP – Thornton Water Treatment Plant
WBWTP – Wes Brown Water Treatment Plant
WTP – Water Treatment Plant

Executive Summary

This Technical Memorandum (TM) summarizes the evaluations of alternative corridors for the Phase II pipeline of the Thornton Reach Segment of the Thornton Water Project (TWP) water pipeline. The evaluations included five alternative corridors from the intersection of 120th Avenue and Quebec Street (terminus of Phase I) to the Wes Brown Water Treatment Plant (WTP). The alternative corridors were developed using guidelines including the following:

- Utilize input from potentially affected local government and agencies;
- Minimize impacts to right-of-way (ROW);
- Minimize impacts to water bodies and wetlands;
- Bypass geological hazard areas;
- Minimize impacts to environmentally sensitive areas such as open space or conservation areas;
- Minimize impacts to congested areas, typically in developed, densely populated areas;
- Utilize city of Thornton (Thornton)-owned property and easements; and
- Follow ROW/easements/property lines.

Corridor segments that satisfy these guidelines were identified and the segments were assembled together to create complete corridors that extended from the origination point (120th Avenue and Quebec Street) to the destination at the WBWTP. This corridor development process was used to identify the five alternative pipeline corridors that were studied in detail. The analyses of the five alternative corridors involved the identification of representative sections of each corridor to allow detailed assessments of multiple pipeline sections that have been combined into each of the corridors. A total of 20 pipeline corridor sections were identified to characterize the five pipeline corridors. Each of the representative pipeline corridor sections were reviewed in detail to assess the pipeline construction, operation, and maintenance issues present in each section.

The initial evaluations of the five pipeline corridors used non-economic criteria to support a scoring of each corridor. The non-economic criteria and method of measurement used in the corridor evaluations included the following:

1. Geologic hazards (estimated pipeline length within areas of unsuitable soils) or high groundwater table;
2. Extent and number of parcel owners affected;
3. Alignment length within ROW;
4. Public Disruption (length of corridor within residential and public areas and likely to delay traffic and cause noise pollution;)
5. Surface restoration;
6. Environmental impacts and permitting; and
7. Pipeline operations and maintenance (O&M).

Concept level construction cost estimates were prepared for each of the five corridors to provide an economic evaluation and comparison of the alternatives. The cost estimates included detailed review of each of the corridor sections to assess expected rates of pipeline construction, quantities of materials needed to excavate and restore pipe trenches and include pipeline appurtenances, and the need for trenchless pipeline installation at critical road crossings and environmentally sensitive areas.

The results of the corridor evaluations are summarized as follows:

Evaluation Factor	Corridor Alternative				
	CH2M	Riverdale Road	Minimized Roadway	McKay Road - Existing Pipeline	Modified McKay Road
Non-Economic Evaluation - Rank (Score)	3 (38.45)	5 (30.21)	4 (38.22)	1 (49.94)	2 (48.85)
Economic Evaluation – Rank (Cost $Million)	5 ($33.20)	1 ($21.83)	4 ($33.03)	2 ($26.97)	3 ($29.42)

It is recommended that Thornton pursue the McKay Road – Existing Pipeline (McKay Road) Corridor as the preferred pipeline corridor. Additional study is needed to better define the requirements and constraints of the existing water pipeline easements utilized by this corridor, and to pursue easement rights within the easement for the existing overhead power line parallel to McKay Road from approximately 114th Avenue to 102nd Avenue. Thornton must also consider the acceptability of the revocable easement risks for the pipeline segments within the Xcel Energy powerline easements.

1. Introduction

This technical memorandum (TM) summarizes the analyses performed to evaluate five alternative pipeline corridors for the Phase II pipeline of the Thornton Reach Segment of the Thornton Water Project (TWP) water pipeline. The alternative pipeline corridors begin at the intersection of Quebec Street and 120th Avenue and terminate at the Wes Brown Water Treatment Plant (WBWTP). The TWP pipeline will traverse a general southwest direction from the intersection of 120th Avenue and Quebec Street to the existing WBWTP. The intent of this TM is that the selected pipeline corridor will be used for the final design of the Phase II pipeline.

The corridors for each of the five pipeline alternatives are mapped in Figure 1. This TM has assumed that the pipeline hydraulics, pressures, hydraulic grade line (HGL), and related considerations for each pipeline corridor are suitable for necessary operation of the TWP. The methods used to identify and screen these five pipeline corridors are described in Section 2 of this TM.

The five alternative pipeline corridors are as follows:

- CH2M-Identified TWP Corridor
- Minimized Roadway Corridor
- Riverdale Road Corridor
- McKay Road Corridor
- Modified McKay Road Corridor

This TM is structured as follows:

Executive Summary
1. Introduction
2. Development of Pipeline Corridors
3. Non-Economic Evaluation
4. Alternative Corridors Economic Analysis
5. Summary and Conclusions

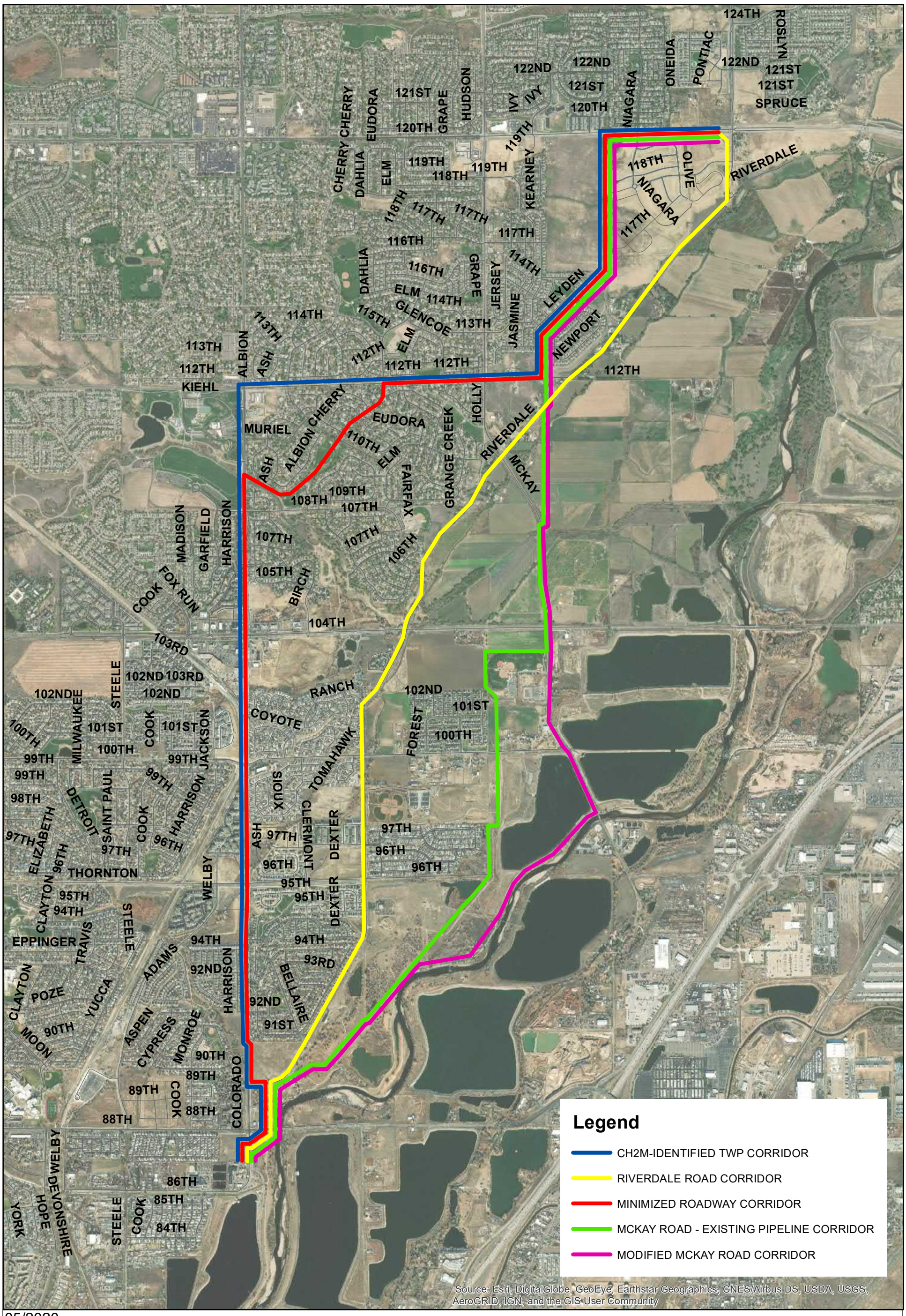

05/2020

N

Figure 1 - Phase II Alignment Alternatives

2,000 1,000 0 2,000 Feet

Document Path: C:\Users\warrenc1\Documents_AECOM Phoenix\60619101_Thor_Reach\900_CAD_GIS\920_929_GIS_Graphics\MXD Files\Figures\Phase II Alignment Alternatives.mxd

2. Development of Pipeline Corridors

Study Area and Data Collection

The study area identifying possible pipeline corridors is bounded by I-25 on the west, 120th Avenue on the north, 84th Avenue on the south, and the South Platte River on the east. The study area is comprised of primarily urban development with relatively dense residential and commercial land uses. The exception to the urban development is the land east of Riverdale Road to the South Platte River.

The first four of the five pipeline corridor alternatives were identified as part of a task for the *City of Thornton Water Infrastructure Master Plan, April 2020*.[1] The additional alignment identified for these evaluations (Modified McKay Road Corridor) was identified during field reconnaissance of the existing Thornton utility easements in the vicinity of the McKay Pump Station and the West Brown WTP in February 2020.This additional corridor follows the northern section of the McKay Road corridor and splits from the McKay Road main corridor south of 104th Avenue, and continues along McKay Road until reaching the Colorado Front Range Trail along the South Platte River. The corridor follows the existing trail and rejoins the McKay Road corridor southeast of Riverdale Road.

These corridors were developed through a high level aerial mapping review of the study area, with end points being the intersection of 120th Avenue and Quebec Street on the north and the existing WBWTP on the south. Mapping information used for this task included primarily Google Earth digital mapping; Thornton water, storm, and sewer utility GIS information; Thornton mapping of existing raw water pipelines, the Thornton Transportation Master Plan (*City of Thornton Transportation Plan*, C.D. No. 2009-121 July 2009), and the Riverdale Road Corridor Plan (*Riverdale Road Corridor Plan*, Adams County Colorado, PRJ2005-00024, April 2005). GIS mapping of the study area was geo-referenced with an aerial image as background to facilitate identification of surface features prevalent within the pipeline corridors.

The study area includes many miles of potential pipeline corridor segments within existing recreation trails, parks, and hiking paths, utility corridors, railroad ROW, and major and arterial roadways. Areas that were excluded from consideration or considered undesirable for pipeline construction included residential properties not adjacent to arterial roads and areas known to be congested with existing buried utilities.

The corridor development process started with the consideration of a corridor that was identified by CH2MHill (CH2M) as part of their planning analysis of the TWP Pipeline. The CH2M-Identified TWP Corridor follows a “safe” path along established ROW and easement corridors. This safe path has the benefit of following a corridor that has already experienced significant disturbance and has available ROW for the permanent easement required for the TWP Pipeline construction and operation. The CH2M-Identified TWP Corridor was designated as the baseline corridor against which newly identified alternative corridors could be compared.

A review of the potential corridor segments was completed to identify which corridor segments could be combined to form a complete alternative pipeline corridor that could present possible improvement to the CH2M-Identified TWP Corridor. The identified segments were combined to develop multiple full-length corridors that connect the intersection of 120th Avenue and Quebec Street to the existing WBWTP.

Alternative Corridor Descriptions

CH2M-Identified TWP Corridor

The CH2M-Identified TWP Corridor extends west along 120th Avenue from Quebec Street. The corridor turns south from 120th Avenue at an existing utility ROW that is approximately one-half mile west of Quebec Street. The corridor follows the utility easement south and southwesterly to 112th Avenue. The corridor turns

[1] The McKay Road corridor was revised following the completion of the Master Plan to eliminate the pipeline segment within 100th Avenue. The revised corridor is reflected in Figure 1.

west at 112th Avenue and follows the road ROW to Colorado Boulevard. The corridor turns south at Colorado Boulevard and follows the road ROW to a location approximately 400 feet south of the intersection with Riverdale Road. The corridor turns east across existing ROW to a location approximately 430 feet east of Colorado Boulevard to intersect with an existing Thornton buried pipeline easement. The corridor turns south and parallel to the existing pipeline easement to a proposed trenchless crossing of 88th Avenue. The corridor parallels the existing buried pipeline easement across vacant land to a connection on the south side of the WBWTP.

Design, permitting, and construction issues that reduce the attractiveness of this Corridor are the relatively long sections of the corridor within major roadways. The pipeline construction within these roadways would involve significant levels of traffic control and public disruption due to the heavily traveled roadway corridors.

Minimized Roadway Corridor

The Minimized Roadway Corridor is very similar to the CH2M-Identified TWP Corridor with exception of the length of the corridor in the ROW for 112th Avenue the Colorado Boulevard. The corridor follows the 112th Avenue ROW to the intersection with Dahlia Drive, approximately 2,970 feet east of Colorado Boulevard. The corridor turns to a southwesterly direction along Dahlia Drive to the northeast end of Grange Creek Park. The corridor continues southwesterly through Grange Creek Park to the bank of Grange Hall Creek. The corridor extends a trenchless crossing of Grange Hall Creek to the west side of the creek and to Colorado Boulevard. The corridor intersects with Colorado Boulevard approximately 2,050 feet south of 112th Avenue, and then turns south along the Colorado Boulevard ROW to follow the remainder of the CH2M-Identified Corridor to the WBWTP. The expectation of the Minimized Roadway Corridor was that the reduced total length of the corridor and the reduced length of corridor in the arterial Colorado Boulevard and 112th Avenue ROW, as compared to the CH2M-Identified Corridor, would result in a reduced estimated construction cost and reduced public disruption and traffic control needs.

Design, permitting, and construction issues that reduce the attractiveness of this Corridor are the relatively long sections of the corridor within major roadways. The pipeline construction within these roadways would involve significant levels of traffic control and public disruption due to the heavily traveled roadway corridors.

Riverdale Road Corridor

The Riverdale Road Corridor follows road ROW in a path that is very distinct from the other corridors. The Riverdale Road Corridor most closely approximates a straight-line path from the start at 120th Avenue and Quebec Street to the destination at the WBWTP. The expectation of the Riverdale Road Corridor is that the reduced length of the corridor would result in a reduced estimated construction cost and reduced construction duration that could result in reduced public disruption. The Riverdale Road Corridor extends south along Quebec Street from 120th Avenue to Riverdale Road. The corridor turns at Riverdale Road to follow the Riverdale Road ROW in a southwesterly, meandering path across McKay Road and 104th Avenue to a location near 102nd (undeveloped) where the corridor turns straight south and crosses 100th Avenue and 96th Avenue. The corridor continues along Riverdale Road in a southwesterly direction to a location approximately 430 feet east of Colorado Boulevard and then follows the existing buried Thornton Pipeline in the same path as the other corridors to the connection at the WBWTP.

Design, permitting, and construction issues that could influence the attractiveness of the Riverdale Road Corridor are related to the designation of Riverdale Road by Adams County as a scenic byway and the need for permitting and/or negotiations with Adams County for lengths of Riverdale Road that are within Adams County. In various short sections of the Riverdale Road corridor, it is necessary to either design and construct the pipeline on the north and west side of Riverdale Road within a very narrow width that would require permanent easement within private property or to construct the pipeline on the south and east side of Riverdale Road that is within Adams County.

McKay Road – Existing Pipeline Corridor

The McKay Road Corridor follows a path that is very distinct from the other corridors. The intent of the McKay Road Corridor is to maximize use of existing, established utility corridors in the study area. The expectation of the McKay Road Corridor is that the reduced length of the corridor within ROW and roads would result in reduced public disruption and increased pipeline installation rates and lower construction costs. The McKay Road Corridor extends west along 120th Avenue from Quebec Street. The corridor turns south from 120th Avenue at an existing utility ROW that is approximately one-half mile west of Quebec Street. The corridor follows the utility easement south and southwesterly to 112th Avenue. The corridor continues south across 112th Avenue and follows the utility corridor. The corridor continues south across Riverdale Road and merges with the McKay Road ROW north of 104th Avenue. At this location, the pipeline corridor can continue south and utilize either the McKay Road ROW or the existing utility corridor. The west side of McKay Road is within Thornton, and the east side is within Adams County. The corridor continues south across 104th Avenue with a bored, trenchless crossing of 104th Avenue. The corridor turns west along the north border of Sports Fields on the west side of McKay Road at a location approximately 440 feet south of 104th Avenue. The corridor extends to the west side of the Sports Fields and connects with an existing Thornton water pipeline easement with a north-south bearing. The corridor turns south to extend parallel to the existing easement and follows the existing easement in a south and southwesterly direction all the way to the location north of 88th Avenue at which the corridor turns directly south and crosses 88th Avenue with a trenchless bore. The corridor continues south and then follows the existing buried Thornton Pipeline in the same path as the other corridors to the connection at the WBWTP.

Design, permitting, and construction issues that reduces the attractiveness of the McKay Road Corridor are related to relatively short sections of McKay Road that pass through Adams County. Additionally, pipeline construction adjacent to McKay Road would involve significant levels of traffic control and public disruption due to the narrow roadway corridor and the heavy traffic loading on McKay Road.

Modified McKay Road Corridor

The Modified McKay Road Corridor follows a path that is very similar to the McKay Road Corridor. The expectation of the Modified McKay Road Corridor is to achieve the same benefits of the McKay Road Corridor with the added benefit of avoiding possible public disruption at the Sports Field complex south of 104th Avenue. The Modified McKay Road Corridor avoids impacts to the Sports Field complex by extending south along McKay Road past the Sports Field rather than turning west along the north border of the Sports Field. The Modified McKay Road Corridor extends south along McKay Road to the north side of the South Platte River. The corridor turns to a southwesterly direction along the north side of the South Platte River approximately following the path of the Colorado Front Range Trail and along the south border of West Sprat-Platte Lake. The corridor extends approximately 5,350 feet from McKay Road and past the south border of West Sprat-Platte Lake to a location where it intersects with the McKay Road Corridor. The corridor continues south and then follows the existing buried Thornton Pipeline in the same path as the other corridors to the connection at the WBWTP.

Design, permitting, and construction issues that reduce the attractiveness of the McKay Road Corridor are related to relatively short sections of McKay Road that pass through Adams County. Additionally, pipeline construction adjacent to McKay Road will involve significant levels of traffic control and public disruption due to the narrow roadway corridor and the heavy traffic loading on McKay Road.

3. Non-Economic Evaluation

Corridor Analyses

This section of this Report describes the non-economic criteria and the analyses used to evaluate and compare the five alternative pipeline corridors. The analyses of the five alternative corridors involved the identification of representative segments of each corridor to allow detailed assessment of the multiple pipeline segments that are combined into each of the corridors. A total of 20 pipeline corridor segments were identified to represent the five pipeline corridors. Representative corridor cross-sections (sections) were developed for each of the corridor segments to allow detailed assessment of the economic and non-economic issues related to the full corridor.

Each of the representative pipeline corridor segments were reviewed in detail to assess the pipeline construction, operation, and maintenance issues present for each segment. This included consideration of the non-economic evaluation criteria described below for each segment of each corridor. Each section of each segment describes the surface features, construction obstructions, and other buried utilities that will influence the economic and non-economic factors for the new TWP pipeline construction. The detailed descriptions of each segment with the corridor section and the scoring of the non-economic evaluation criteria for each segment are included in Appendix 1.

Non-Economic Evaluation Criteria

The non-economic criteria were identified and defined in coordination with the Thornton TWP project team and were specifically defined to suit the conditions of the study area. The five alternative pipeline corridors were evaluated based on the following criteria:

1. Geologic Hazards;
2. Extent and Number of Parcel Owners Affected;
3. Alignment Length within ROW;
4. Public Disruption;
5. Surface Restoration;
6. Environmental Impacts and Permitting;
7. Pipeline Operations and Maintenance (O&M); and
8. Overall Cost.

The focus of this alignment study was to subjectively compare these criteria related to the suitability of each corridor for the construction, operation, and maintenance of a 42-inch diameter water pipeline. A subjective relative score range of 1 (worst) through 10 (best) was used to compare the attributes of each pipeline corridor section. The seven criteria were defined and used to develop a relative score for pipeline construction, operation, and maintenance considerations for each pipeline segment as follows:

1. Geologic Hazards - Impacts (increases) to the cost of construction required by known geologic features discovered during geotechnical data investigations. Areas with high bedrock or groundwater would be the most impacted by this factor. This factor was judged to be worst (least desirable; a relative score of 1) for corridors through perched groundwater, groundwater tables, or bedrock. This factor was judged to be best (most desirable; a relative score of 10) for corridors with clayey soils. Sandy soils are judged to have moderate scores between 1 and 10 for this factor. This criterion measures the unsuitability of the geotechnical aspects of the corridor and is also reflected in the estimated construction cost. This criterion was evaluated without benefit of project specific geotechnical field sampling or testing, and is primarily based on existing available information and reported information.

2. Total count and extent of corridor length of the pipeline along unique properties. Areas with dense population would be most impacted by this factor. This criterion was judged to be worst (least desirable; a relative score of 1) for corridors outside the City ROW. This factor was judged to be best (most desirable; a relative score of 10) for corridors in rural areas. Corridors in moderately developed areas are judged to have moderate scores between 1 and 10 for this criterion.
3. Length of pipeline outside ROW owned by Thornton affecting individual property owners, developers, and Adams County ownership. Areas that fall into unincorporated Adams County or private property would be most impacted by this factor. This factor was judged to be worst (least desirable; a relative score of 1) for corridors with long runs in Adams County ROW. This factor was judged to be best (most desirable; a relative score of 10) for corridors through major roadway ROW. Private land ownership and utility easements are judged to have moderate scores between 1 and 10 for this criterion. An important issue related to the use of existing utility easements is whether the easement for the new TWP pipeline is revocable or irrevocable. Many of the existing pipeline easements held by Thornton in the Study Area are revocable easements that present some risk to Thornton.
4. Disruption to the public caused by traffic delays, noise, and dust. Areas including residential housing, public facilities such as schools and hospitals, and high-traffic commercial areas would be most impacted by this criterion. This criterion was judged to be worst (least desirable; a relative score of 1) for corridors through dense residential or commercial development. This criterion was judged to be best (most desirable; a relative score of 10) for corridors that use utility ROW. Trails and minor roadways were judged to have intermediate scores between 1 and 10 for this criterion.
5. Impacts (increases) to the cost of construction required by the removal and replacement of surface features or avoidance of other buried obstacles during pipeline construction. Major roadways would be most impacted by this factor. This factor was judged to be worst (least desirable; a relative score of 1) for corridors through major roadway ROW. This factor was judged to be best (most desirable; a relative score of 10) for corridors that use utility ROW. Trails and minor roadways are judged to have moderate scores between 1 and 10 for this criterion.
6. Schedule and cost impacts of environmental permitting and access permits to gain permission for construction. The overall permitting strategy for the TWP is to strategically avoid a nexus with federal permits while simultaneously minimizing construction costs and avoiding scheduling delays. As such, non-jurisdictional surface water drainages may be crossed by open cut/trenching methods. Wetlands and surface water features that are determined to be jurisdictional by the U.S. Army Corps of Engineers (USACE) under Section 4 of the Clean Water Act will be bored to avoid triggering a 404 permit and associated documentation under the National Environmental Policy Act (NEPA). Permitting for new pipeline construction within Adams County is a significant consideration for this criterion. This criterion was judged to be worst (least desirable; a relative score of 1) for corridors along trails or within Adams County ROW. This criterion was judged to be best (most desirable; a relative score of 10) for corridors through utility ROW. Major and minor roadways are judged to have moderate scores between 1 and 10 for this criterion.
7. An additional criterion was used to develop a relative score for pipeline operation and maintenance and external loading considerations. Corridors including utility ROW and trails would be least impacted by this criterion, and major roadways would be most impacted. Pipeline corridor conditions that negatively impact the operation and maintenance of a pipeline or that expose the pipe to consistent traffic loads were judged to be worst (least desirable; a relative score of 1) for major roadway ROW. Pipeline corridor conditions that only include minor impacts to the O&M or external loadings of a pipeline were judged best (most desirable; a relative score of 10) for trails and utility ROW. Minor roadways are judged to have moderate scores between 1 and 10 for this criterion.

Following this evaluation, a weighted average comparative score for each of the five identified pipeline corridors was developed by measuring the length of each corridor segment. The relative score for each of the corridor segment types was applied to each segment length, and the length-based weighted average score for each corridor segment was summed to determine a total score for each pipeline corridor. Based

on the relative scoring values of 1 for worst condition and 10 for best condition, the corridor with the highest comparative score is considered most preferable, and the corridor with the lowest comparative score is considered least preferable based on non-economic criteria. The weighted average relative scores for each of the five evaluated pipeline corridors are shown in the following table.

Table 1: TWP Corridor Non-Economic Evaluation Length Weighted Scoring Summary

Scoring Factor	Alignment Alternative				
	CH2M	Riverdale Road	Minimized Roadway	McKay Road - Existing Pipeline	Modified McKay Road
Geologic Hazards	5.00	4.12	5.00	4.72	4.35
Number of Parcel Owners Affected	9.85	5.86	9.85	8.11	8.62
Alignment Length within ROW	9.62	5.24	8.93	9.61	9.61
Public Disruption	2.33	3.37	2.62	6.58	6.32
Surface Restoration	2.55	4.19	2.71	6.65	6.11
Environmental/Access Permit	5.73	3.00	5.47	7.46	6.97
Pipe O&M	3.39	4.44	3.65	6.82	6.88

A weighted average comparative score for each of the five identified pipeline corridors was developed by measuring the length of each corridor segment. The relative score for each of the corridor segment types was applied to each segment length, and the length-based weighted average score for each corridor segment was summed to determine a total score for each pipeline corridor. Based on the relative scoring values of 1 for worst condition and 10 for best condition, the corridor with the highest comparative score is considered most preferable, and the corridor with the lowest comparative score is considered least preferable. The weighted average relative scores for each of the five evaluated pipeline corridors are shown in the following table. The corridor inventories and scoring calculation table for each of the corridors are included in Appendix 2.

4. Alternative Corridors Economic Analysis

Conceptual level cost estimating was performed to compare the economic costs of each corridor. This cost information is the added to the non-economic evaluation for an overall evaluation of the corridor. Criteria such as pipeline length, ease of installation, surface restoration, traffic control, trenchless pipeline installation at major road crossings and wetland crossings were considered in developing the cost of construction for each corridor. Costs for permitting and easements are not included in the estimates. The cost estimates are an estimate of possible construction costs for budgeting purposes and for comparison of alternative corridors. The cost estimates are based on the information described in the cost evaluations in this report. Uncertain market conditions such as, but not limited to: local labor; or contractor availability, wages, other work, material market fluctuations; price escalations, force majeure events, and developing bidding; conditions may affect the accuracy of these estimates.

A summary of the cost estimates for each corridor is included in Table 2. More detailed cost breakdowns and descriptions of assumptions and clarifications for the cost estimates are included in Appendix 3.

5. Summary and Conclusions

This TM summarizes the analyses and evaluations used to select a preferred corridor for the Phase II pipeline of the Thornton Reach Segment of the TWP water pipeline. Five alternative pipeline corridors were evaluated using non -economic criteria. There are multiple potential pipeline corridors through the study area, but most segments pass through dense urban areas that would typically involve public disruption caused by road lane closures and traffic delays and significant surface restoration costs as part of the pipeline installation.

This pipeline corridor evaluation identified two corridors that involve reduced public disruption and surface restoration costs as compared to the other alternative corridors. The non-economic criteria evaluations conclude that the McKay Road-Existing Pipeline Corridor and the Modified McKay Road Corridor are the top two preferred pipeline corridors by a considerable margin. Both of the McKay Road Corridors have a relative evaluation scores that are 22-38% more favorable than the lower-ranked corridors. The McKay Road -Existing Pipeline Corridor is slightly preferred over the Modified McKay Road Corridor. The McKay Road Corridors have several significant non-economic advantages over the other corridors including:

- Maximizing the use of existing utility corridors;
- Minimizing the use of existing roadways;
- Involving the least pipeline length within dense urban areas; and
- Providing an almost direct connection to the WBWTP from Quebec Street and 120th Avenue.

The economic evaluations of the five alternative pipeline corridors indicated that the Riverdale Road alternative has the lowest comparative estimated cost, by approximately $5.1M dollars, under the McKay Road-Existing Pipeline Corridor. However, a cost component that may offset some of this cost difference is the cost of easements, which are not included in this economic evaluation. The Riverdale Road alignment will likely require more easement acquisition than the McKay Road alignment.

The economic and non -economic scoring summaries and relative rank for each corridor are summarized in Table 2.

Table 2: TWP Phase II Corridor Evaluation Non-Economic and Economic Scoring Results

Evaluation Factor	Corridor Alternative				
	CH2M	Riverdale Road	Minimized Roadway	McKay Road - Existing Pipeline	Modified McKay Road
Non-Economic Evaluation – Rank (Score)	3 (38.45)	5 (30.21)	4 (38.22)	1 (49.94)	2 (48.85)
Economic Evaluation – Rank (Cost $Million)	5 ($33.20)	1 ($21.83)	4 ($33.03)	2 ($26.97)	3 ($29.42)

It is recommended that the following considerations be considered by the project team during the review of this draft document and prior to the documentation of the preferred alignment:

- Review acceptability of revocable easement conditions that may apply for easements within the existing Xcel Energy powerline corridor.

- Verify easement opportunities and constraints within the easement for the existing overhead power line parallel to McKay Road from approximately 114th Avenue to 102nd Avenue.
- Verify opportunities and constraints of the easements for the existing water pipelines that utilize this corridor.
- Determine the opportunities and constraints in working with Adams County in these corridors, including the terms and conditions of an anticipated IGA with Adams County
- Work with Western States Land Services to develop an estimated unit price for easements in this alignment area to evaluate the comparative easement costs for the McKay Road and Riverdale Road alignments.
- Review the significance of the cost difference between the McKay Road and Riverdale Road alignments relative to the higher non-economic advantages provided by the McKay Road alignment.

Note that the Modified McKay Roadway Corridor also has favorable non-economic and economic criteria advantages over each of the other pipeline corridors in the study area. This corridor could be used if fatal flaws or other constraints do not allow the use of the McKay Road – Existing Pipeline Corridor.

Appendix 1 - Alignment Typical Sections

Introduction of Typical Sections

This appendix contains a depiction and description of the various types of pipeline corridor characteristic sections that make up the potential pipeline corridors under consideration. These corridor sections are cut along each alternative alignment corridor to give a representation of typical cross sections that can be found along each alignment alternative. Each section is cut as though you are looking downstream, toward the WBWTP. Alignments which contain at least a portion of the section are listed below the section. Potential Early Works locations, floodplain crossings, and proposed jack-and-bore tunnels are also highlighted in the description of the section. It is assumed that crossings of agricultural canals as well as the Lower Clear Creek Canal will not be bored.

An overall map showing where the section cuts are located is included on the following page.

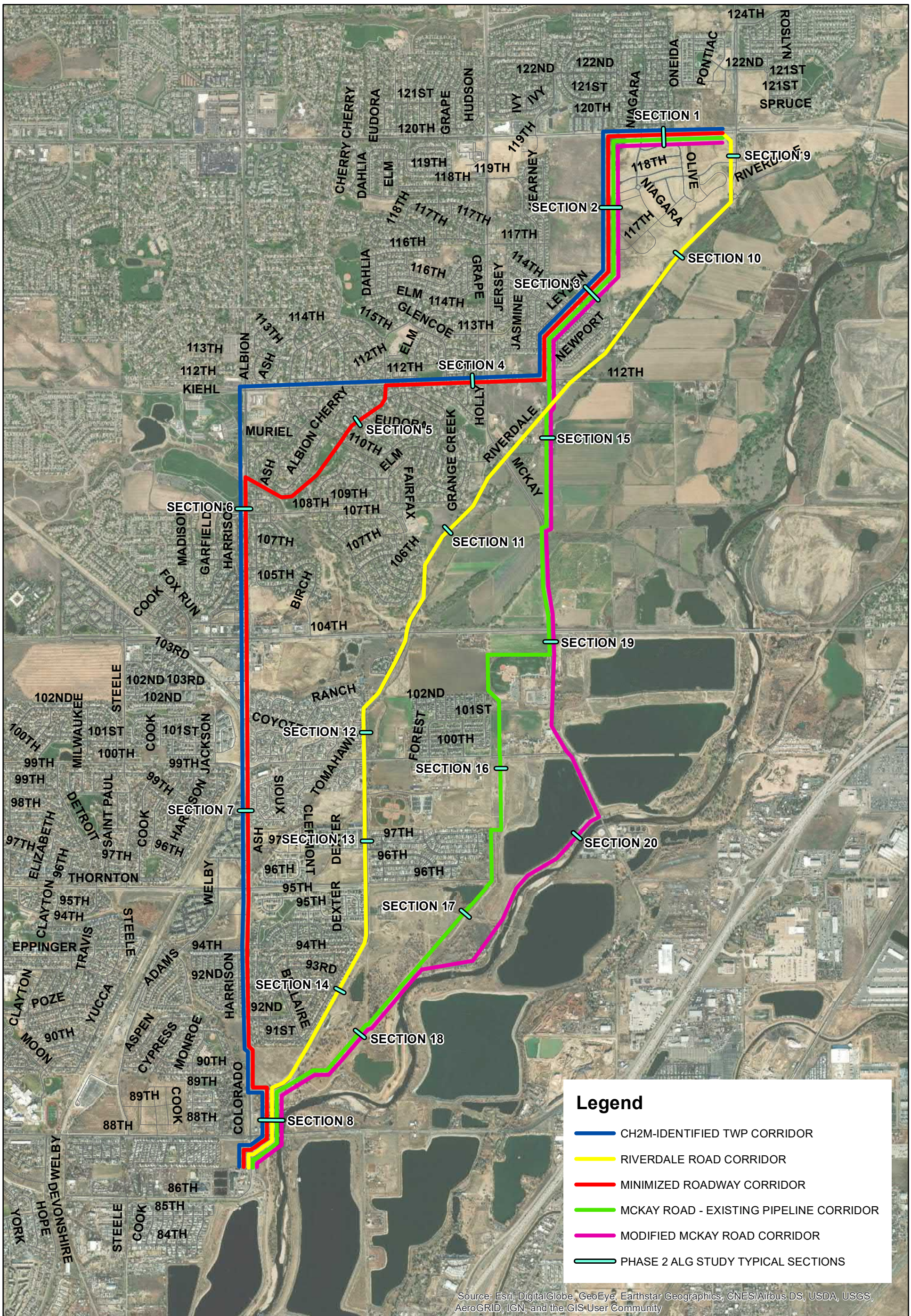

05/2020

N

Appendix 1 - Phase II Sections Key Map

2,000 1,000 0 2,000 Feet

Document Path: C:\Users\warrenc1\Documents_AECOM Phoenix\60619101_Thor_Reach\900_CAD_GIS\920_929_GIS_Graphics\MXD Files\Figures\Phase II Alignment Alternatives-Sections Key Map.mxd

Section 1 – 120th Ave

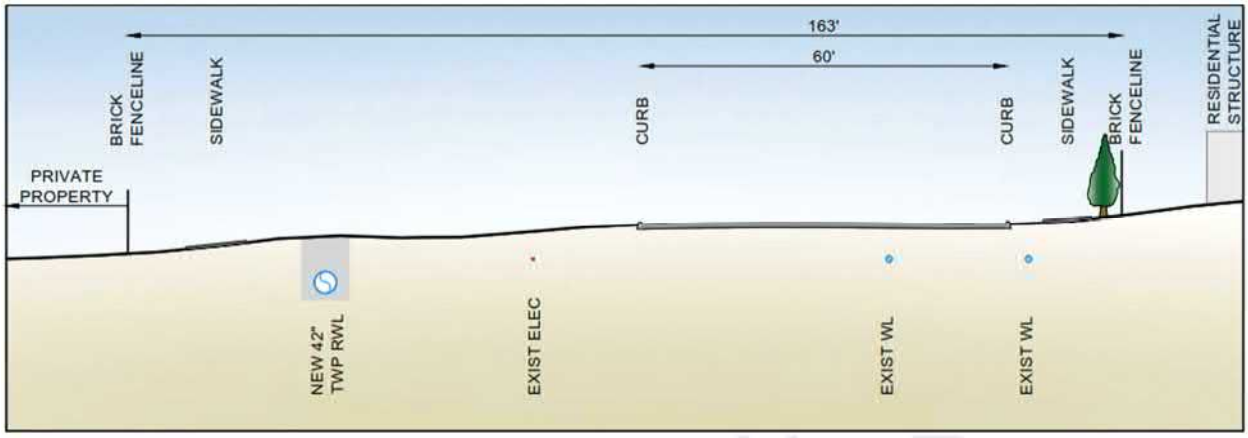

Alignment(s) containing this section:

- CH2M-Identified TWP Corridor
- Minimized Roadway Corridor
- McKay Road Corridor
- Modified McKay Road Corridor

This section represents the first approximately 2480 LF segment of four of the alignment alternatives. The section runs east to west along the south side of 120th Ave between Quebec St and the western edge of Mayfield Park, in Thornton ROW. The section shows the proposed pipe within the southern shoulder of 120th Ave, approximately 40 feet off of the edge of road, near to – and in some portions underneath – existing sidewalk. The segment also crosses Niagara St. The construction for the Mayfield development is in progress, though the properties which border 120th Ave do not appear to have broken ground. If an alignment which includes this section is chosen, this may be an area of opportunity for Early Works.

Section 1 - 120th Avenue	
Criteria	**Score**
Criteria 1 - Geologic Hazards	5
Criteria 2 - Number of property parcels	10
Criteria 3 - Length in ROW or Easement	10
Criteria 4 - Public Disruption	5
Criteria 5 - Surface Restoration	5
Criteria 6 - Environmental/ Permitting	5
Criteria 7- Pipeline O & M	7

Section 2 – Utility Corridor 120th Ave to 116th Ave

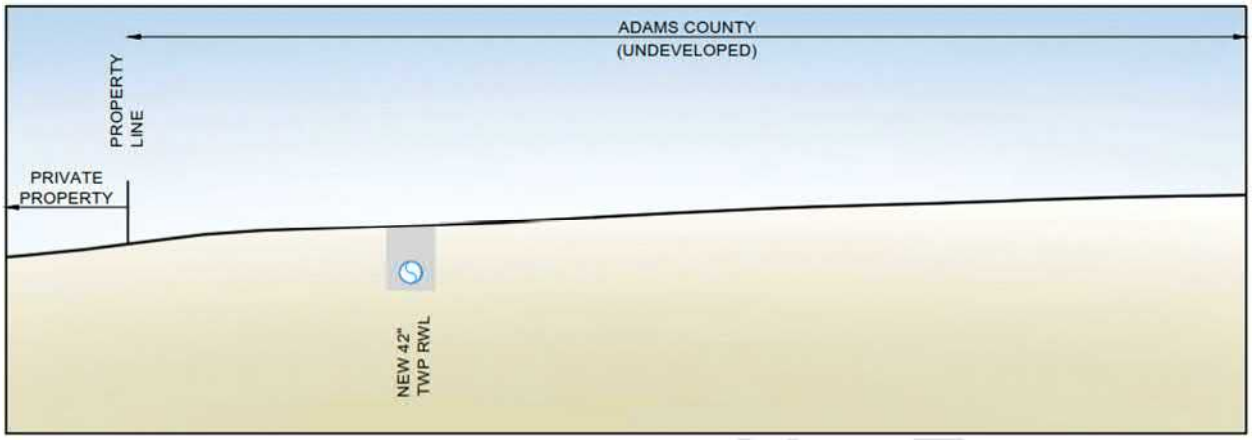

Alignment(s) containing this section:

- CH2M-Identified TWP Corridor
- Minimized Roadway Corridor
- McKay Road Corridor
- Modified McKay Road Corridor

This section represents an approximately 2980 LF segment of four of the alignment alternatives. The section runs north to south along the west side of Mayfield Park, in Adams County; private easement would need to be acquired, but that amount is not quantified. The segment runs outside Thornton in order to avoid what appears to be a protected wetland area at the north end of the segment. The section shows the proposed pipe in Adams County property to avoid the Mayfield residential development to the east; the area is otherwise open. The construction for the Mayfield development is in progress, though the portion of parcels along this segment do not appear to have broken ground. The segment crosses a drainage ditch likely containing wetlands, an area which is proposed for jack-and-bore. If an alignment which includes this section is chosen, the portion bordering the Mayfield development may be an area of opportunity for Early Works.

Section 2 - Utility Corridor 120th to 116th	
Criteria	**Score**
Criteria 1 - Geologic Hazards	5
Criteria 2 - Number of property parcels	10
Criteria 3 - Length in ROW or Easement	10
Criteria 4 - Public Disruption	7
Criteria 5 - Surface Restoration	8
Criteria 6 - Environmental/ Permitting	9
Criteria 7- Pipeline O & M	8

Section 3 – Utility Corridor 116th Ave to 112th Ave

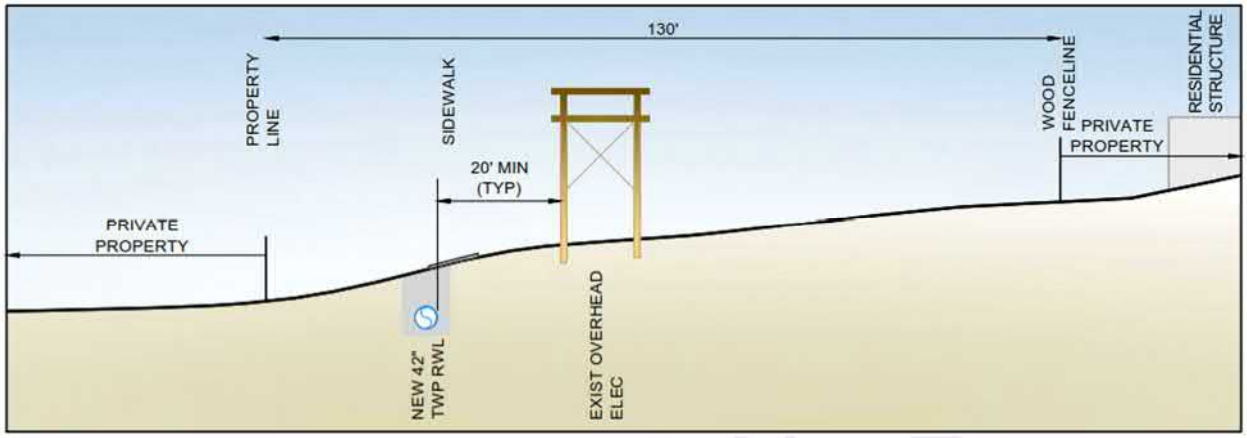

Alignment(s) containing this section:

- CH2M-Identified TWP Corridor
- Minimized Roadway Corridor
- McKay Road Corridor
- Modified McKay Road Corridor

This section represents an approximately 2800 LF segment of four of the alignment alternatives. The section runs northeast to southwest along a path maintained by the Skylake Ranch homeowner's association (HOA), parallel to nearby Xcel distribution towers. Just north of 113th Ave, the segment turns south toward the transmission towers at 112th Ave. As the segment parallels the Xcel towers, an existing utility easement could be acquired. This open area is bordered by existing Skylake Ranch homes to the northwest and southeast. The portion of the segment between 113th and 112th Ave falls in unincorporated Adams County. In addition to sections of concrete path replacement, work in this area would be in proximity to an existing cell tower, basketball court, and community garden plot that would require protection and/or replacement. All four alignments containing this section would involve roadway crossings at 114th and 113th Ave. The CH2M-Identified and Minimized Roadway Corridors must cross the path of the electric lines before turning west along 112th Ave (see Section 4), while the McKay Road and Modified McKay Road can stay one side of the towers and does not require a crossing in this area (see Section 15). There are multiple storm drain crossings as well as a water and sanitary sewer main crossing along this segment.

Section 3 - Utility Corridor 116th to 112th	
Criteria	**Score**
Criteria 1 - Geologic Hazards	5
Criteria 2 - Number of property parcels	9
Criteria 3 - Length in ROW or Easement	10
Criteria 4 - Public Disruption	4
Criteria 5 - Surface Restoration	4
Criteria 6 - Environmental/ Permitting	9
Criteria 7- Pipeline O & M	8

Section 4 – 112th Ave

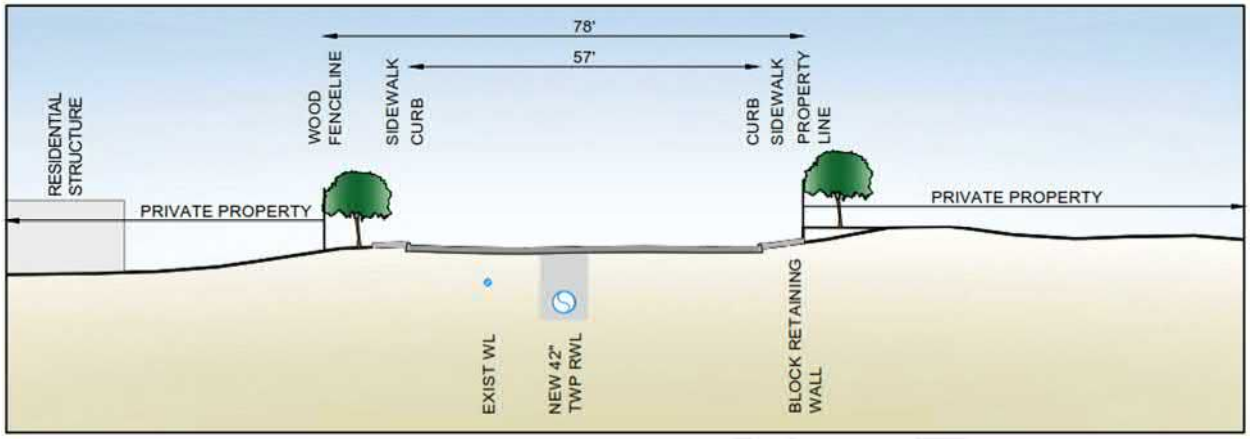

Alignment(s) containing this section:

- CH2M-Identified TWP Corridor
- Minimized Roadway Corridor

This section represents an approximately 6370 LF segment of the CH2M-Identified Corridor, and 3400 LF of the Minimized Roadway Corridor. Both corridor segments begin at the transmission towers on 112th Ave, continuing west within the road cross-section of 112th Ave. The CH2M-Identified Corridor segment continues west to Colorado Blvd (see Section 6), while the Minimized Roadway Corridor turns to the south (see Section 5) at Dahlia Dr. The segment parallels existing water line(s) in 112th Ave. Housing developments border the segment to the north and south. This segment crosses three intersections for the Minimized Roadway Corridor, and five for the CH2M-Identified Corridor. Water and storm sewer crossings occur mainly at these intersections. The 112th Ave corridor between Holly St and just west of Dahlia Dr is within FEMA Zone A (100-year floodplain).

Section 4 - 112th Avenue	
Criteria	**Score**
Criteria 1 - Geologic Hazards	5
Criteria 2 - Number of property parcels	10
Criteria 3 - Length in ROW or Easement	10
Criteria 4 - Public Disruption	1
Criteria 5 - Surface Restoration	1
Criteria 6 - Environmental/ Permitting	5
Criteria 7- Pipeline O & M	3

Section 5 – Dahlia Dr to Colorado Blvd

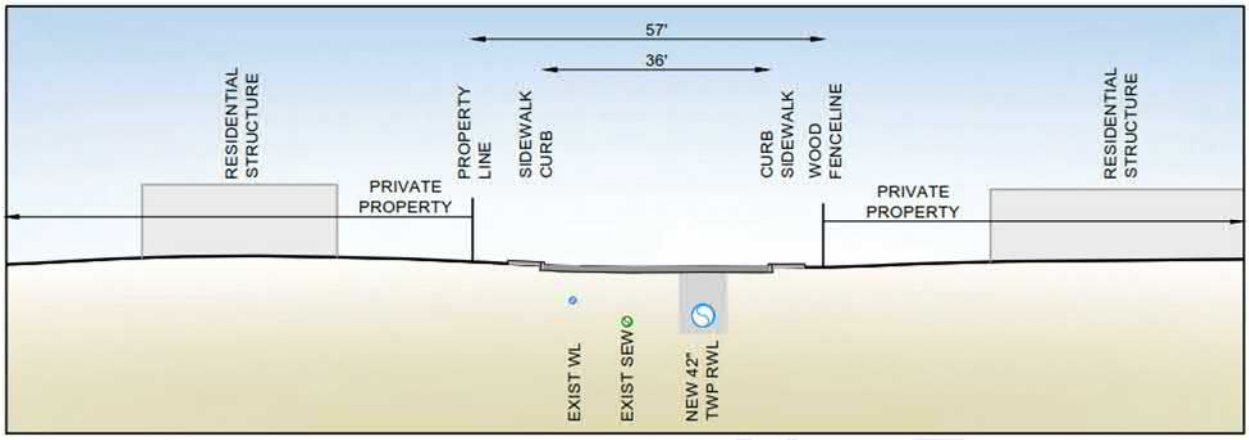

Alignment(s) containing this section:

- Minimized Roadway Corridor

This section represents an approximately 4270 LF segment of the Minimized Roadway Corridor. The segment follows Dahlia Dr to where it dead ends at 110th Ave, and continues along the Grange Creek Park path to where it meets Colorado Blvd. The segment parallels existing water line(s) in 112th Ave. Housing developments border the segment to the north and south. Along Dahlia Dr, this segment parallels existing water and sewer mains within road cross-section. After crossing 110th Ave, the segment would require some sidewalk replacement where it crosses the meandering trail. There are multiple utility crossings along the path including storm and sanitary sewer. The final portion of the segment (approximately 870 LF) follows Grange Hall Creek itself and is within FEMA Zone AE Floodway (100-year floodplain).

Section 5 - Cherry Lane to Colorado Blvd	
Criteria	**Score**
Criteria 1 - Geologic Hazards	5
Criteria 2 - Number of property parcels	10
Criteria 3 - Length in ROW or Easement	5
Criteria 4 - Public Disruption	3
Criteria 5 - Surface Restoration	2
Criteria 6 - Environmental/ Permitting	3
Criteria 7- Pipeline O & M	4

Section 6 – Colorado Boulevard to 104th Ave

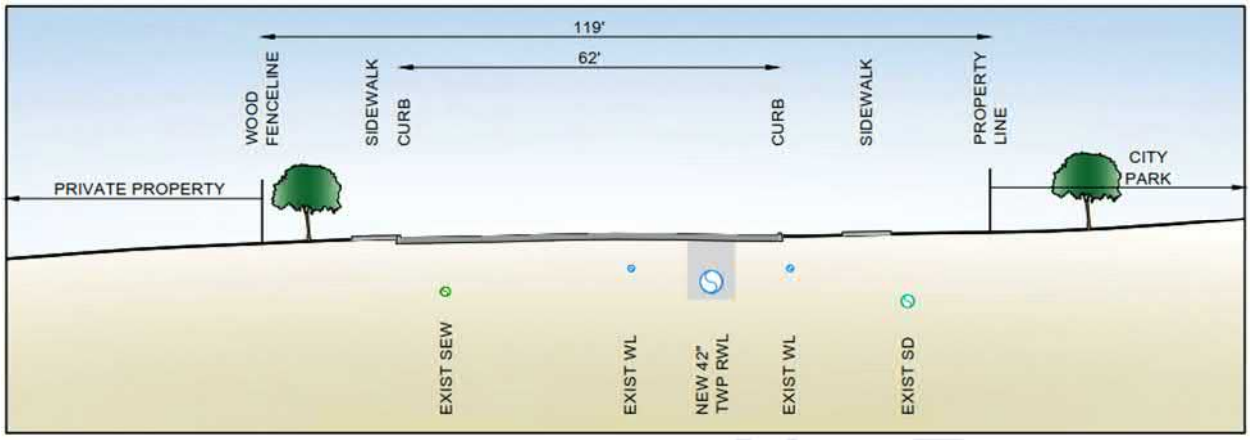

Alignment(s) containing this section:

- CH2M-Identified TWP Corridor
- Minimized Roadway Corridor

This section represents an approximately 5250 LF segment of the CH2M-Identified Corridor, and 3400 LF of the Minimized Roadway Corridor. This segment runs north to south along Colorado Blvd. For the CH2M-Identified Corridor, this representative section starts at 112th Ave and Colorado Blvd, and at Grange Hall Creek and Colorado Blvd for the Minimized Roadway Corridor. The section shows the proposed pipe within the road cross-section of Colorado Blvd and parallels existing utilities in the road cross-section. The Thornton Recreation Center Fields are on the west side of Colorado Blvd until reaching 108th Ave, with housing development and green space following to 104th, with housing developments to the east. This segment crosses three intersections for the Minimized Roadway Corridor, and six for the CH2M-Identified Corridor. Water and sanitary sewer crossings occur mainly at these intersections. There are two detention ponds adjacent to Colorado Blvd along the length of this segment which result in storm sewer crossings. The road crossing at 104th Ave and stream crossing at Grange Hall Creek are proposed for jack-and-bore. The Colorado Blvd corridor between Grange Hall Creek and 109th Pl is within FEMA Floodway Zone AE (100-year floodplain).

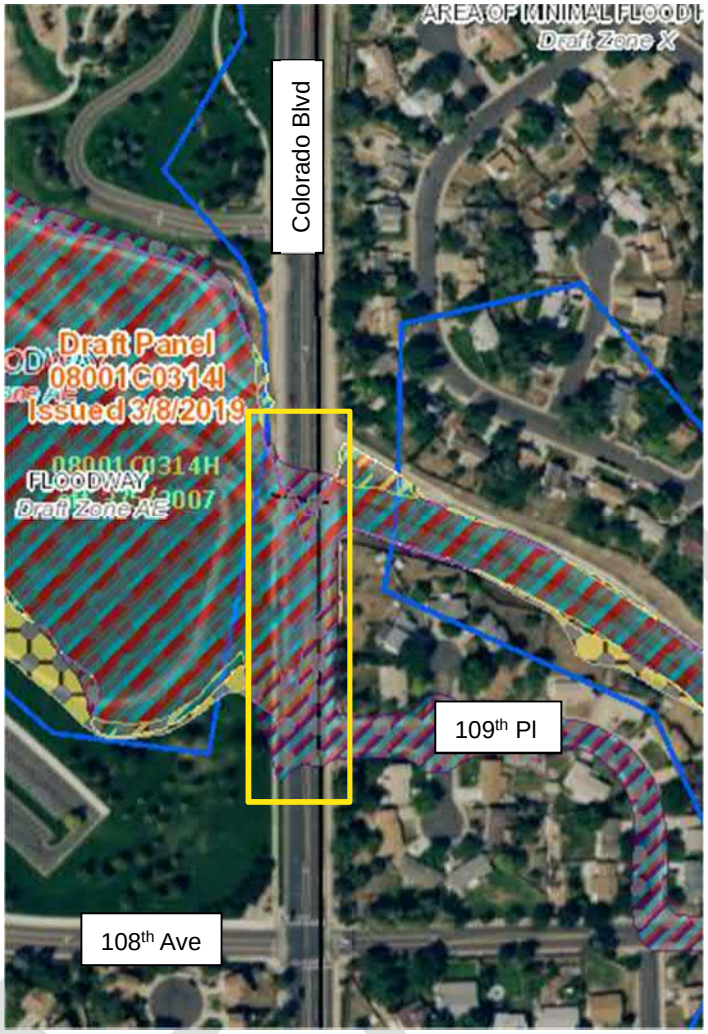

Section 6 - Colorado Boulevard to 104th (partial)	
Criteria	**Score**
Criteria 1 - Geologic Hazards	5
Criteria 2 - Number of property parcels	10
Criteria 3 - Length in ROW or Easement	10
Criteria 4 - Public Disruption	1
Criteria 5 - Surface Restoration	1
Criteria 6 - Environmental/ Permitting	5
Criteria 7- Pipeline O & M	1

Section 7 – Colorado Blvd to 89th Ave

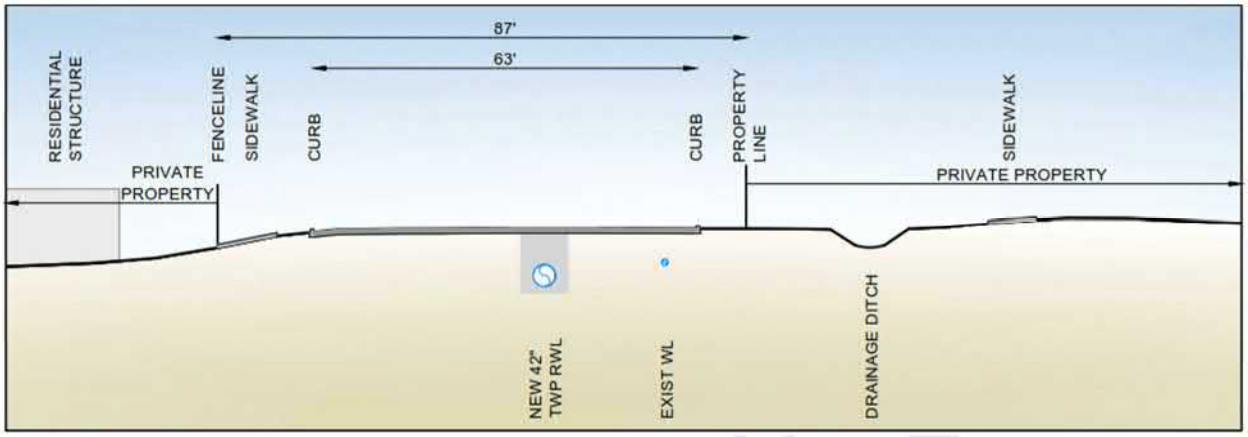

Alignment(s) containing this section:

- CH2M-Identified TWP Corridor
- Minimized Roadway Corridor

This section represents an approximately 9980 LF segment of the two alignment alternatives listed above. This segment runs north to south along Colorado Blvd. The section shows the proposed pipe within the road cross-section of Colorado Blvd and parallels existing utilities in the road cross-section. There is a mixture of commercial, residential, and open space on the west side of Colorado Blvd, with mainly housing developments to the east. This segment crosses three major (traffic-lighted) intersections. Water and sanitary sewer crossings occur at these intersections and at intersecting side streets. There are two detention ponds adjacent to Colorado Blvd along the length of this segment as well as roadside drainage ditches which result in multiple storm sewer crossings. A rail line runs adjacent to Colorado Blvd for approximately 1300 LF near 100th Ave, which implies the presence of buried electrical lines. The road crossing at Thornton Pkwy is proposed for jack-and-bore. The Riverdale Tributary crosses Colorado Blvd just south of 104th Ave is a FEMA Floodway Zone AE (100-year floodplain).

Section 7 - Colorado Blvd to 89th Avenue	
Criteria	**Score**
Criteria 1 - Geologic Hazards	5
Criteria 2 - Number of property parcels	10
Criteria 3 - Length in ROW or Easement	10
Criteria 4 - Public Disruption	1
Criteria 5 - Surface Restoration	1
Criteria 6 - Environmental/ Permitting	5
Criteria 7- Pipeline O & M	1

Section 8 – 89th Ave to WBWTP

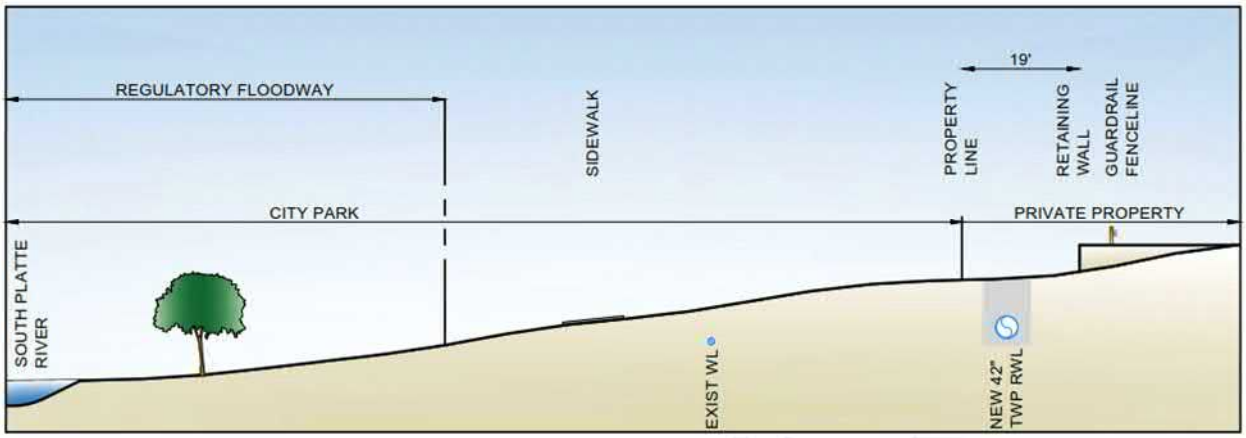

Alignment(s) containing this section:

- CH2M-Identified TWP Corridor
- Minimized Roadway Corridor
- Riverdale Road Corridor
- McKay Road Corridor
- Modified McKay Road Corridor

This section represents an approximately 2020 LF segment of the CH2M-Identified, Minimized Roadway and Riverdale Road Corridors, and 1900 LF of the McKay Road and Modified McKay Road Corridors. This segment runs north to south along the South Platte River. The section shows the proposed pipe parallel to the existing waterline. The area is largely open space though there is a small commercial development at 88th Ave and Colorado Blvd that the pipe passes behind. the CH2M-Identified, Minimized Roadway and Riverdale Road Corridors cross Riverdale Road, and all five alignment alternatives cross 88th Ave and the road which accesses WBWTP. These crossings are where most of the existing utility crossings occur. Small sections of sidewalk would require replacement. Some areas of this segment would require the acquisition of a private easement, but that amount is not quantified. The crossing at 88th Ave is proposed for jack-and-bore. As this segment mostly runs parallel to the South Platte River and in close proximity, there are two portions which cross 100-year floodplain.

Section 8 - 89th Avenue to WBWTP	
Criteria	**Score**
Criteria 1 - Geologic Hazards	5
Criteria 2 - Number of property parcels	9
Criteria 3 - Length in ROW or Easement	4
Criteria 4 - Public Disruption	4
Criteria 5 - Surface Restoration	6
Criteria 6 - Environmental/ Permitting	5
Criteria 7- Pipeline O & M	5

Section 9 – 120th Ave to Riverdale Road

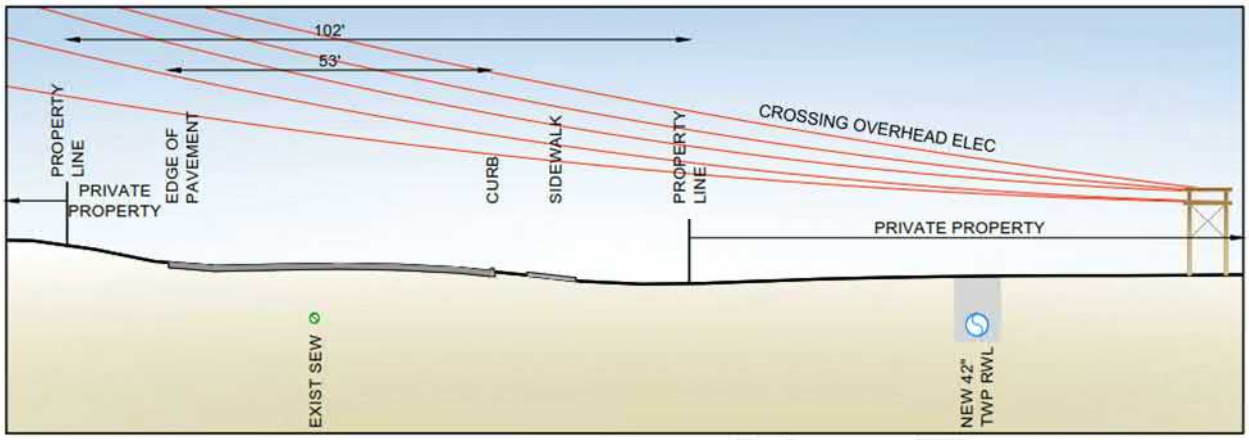

Alignment(s) containing this section:

- Riverdale Road Corridor

This section represents the first approximately 1470 LF segment of the Riverdale Road Corridor. The section runs north to south along the west side of Quebec St, between 120th Ave and the roundabout at Riverdale Rd. The segment lies along the eastern edge of the Mayfield residential development, in private property; private easement would need to be acquired, but that amount is not quantified The section shows the proposed pipe in open area to the west of the road, approximately 70 feet off of the edge of road, until becoming directly adjacent to Quebec St as it bows west near the roundabout. The alignment may be shifted to follow Quebec St more closely as it winds south. The segment also crosses 118th Ave as well as an agricultural canal. The construction for the Mayfield development is in progress, though the properties which border Quebec St do not appear to have broken ground. If the Riverdale Road Corridor is chosen, this may be an area of opportunity for Early Works.

Section 9 - 120th Avenue to Riverdale Road	
Criteria	**Score**
Criteria 1 - Geologic Hazards	5
Criteria 2 - Number of property parcels	8
Criteria 3 - Length in ROW or Easement	1
Criteria 4 - Public Disruption	8
Criteria 5 - Surface Restoration	7
Criteria 6 - Environmental/ Permitting	5
Criteria 7- Pipeline O & M	7

Section 10 – Riverdale Rd to Utility Corridor

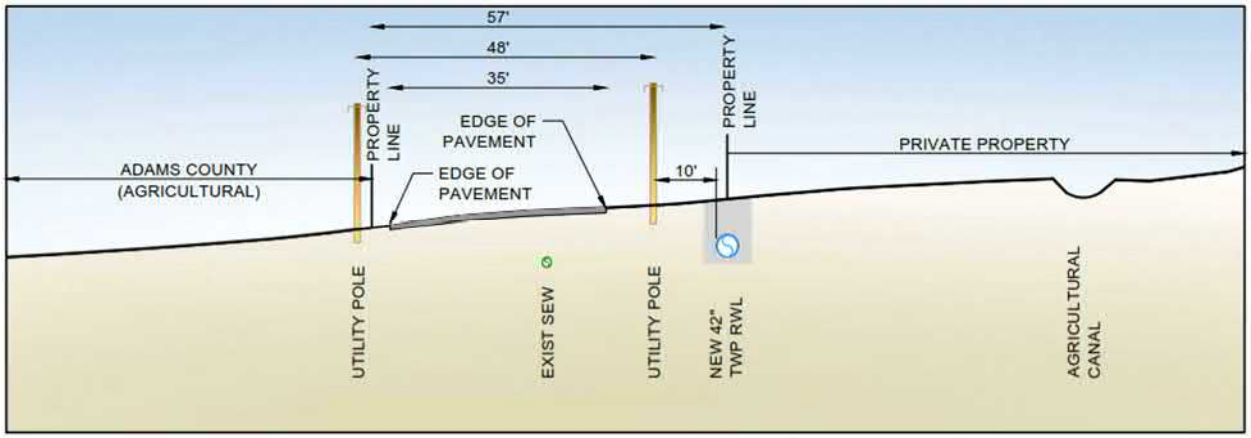

Alignment(s) containing this section:

- Riverdale Road Corridor

This section represents approximately 5860 LF segment of the Riverdale Road Corridor. The section runs northeast to southwest along the northwest side of Riverdale Rd, between the Quebec St roundabout and where the segment crosses the utility corridor just southwest of 112th Ave, parallel to an agricultural canal and sewer line. The first approximately 1580 LF is in Thornton ROW, on the southeastern side of the Mayfield residential development along Riverdale Rd. The remainder is in Adams County, through rural private properties; private easement would need to be acquired, but that amount is not quantified. The section shows the proposed pipe between the agricultural canal and sanitary sewer line. The proposed pipe alignment crosses various sewer lines twice. Adequate spacing from the power pole cannot be maintained. As spacing is tight in some areas between the agricultural canal and the power poles, some power poles may need to be relocated in order to keep the pipe from going too far into some existing private properties, particularly approaching the second half of the segment. The segment also crosses 112th Ave as well as multiple private driveways and overlaps with approximately 880 LF of the agricultural canal at points where the canal bends toward the road. Just southwest of 112th Ave the segment crosses FEMA Zone A (100-year floodplain).

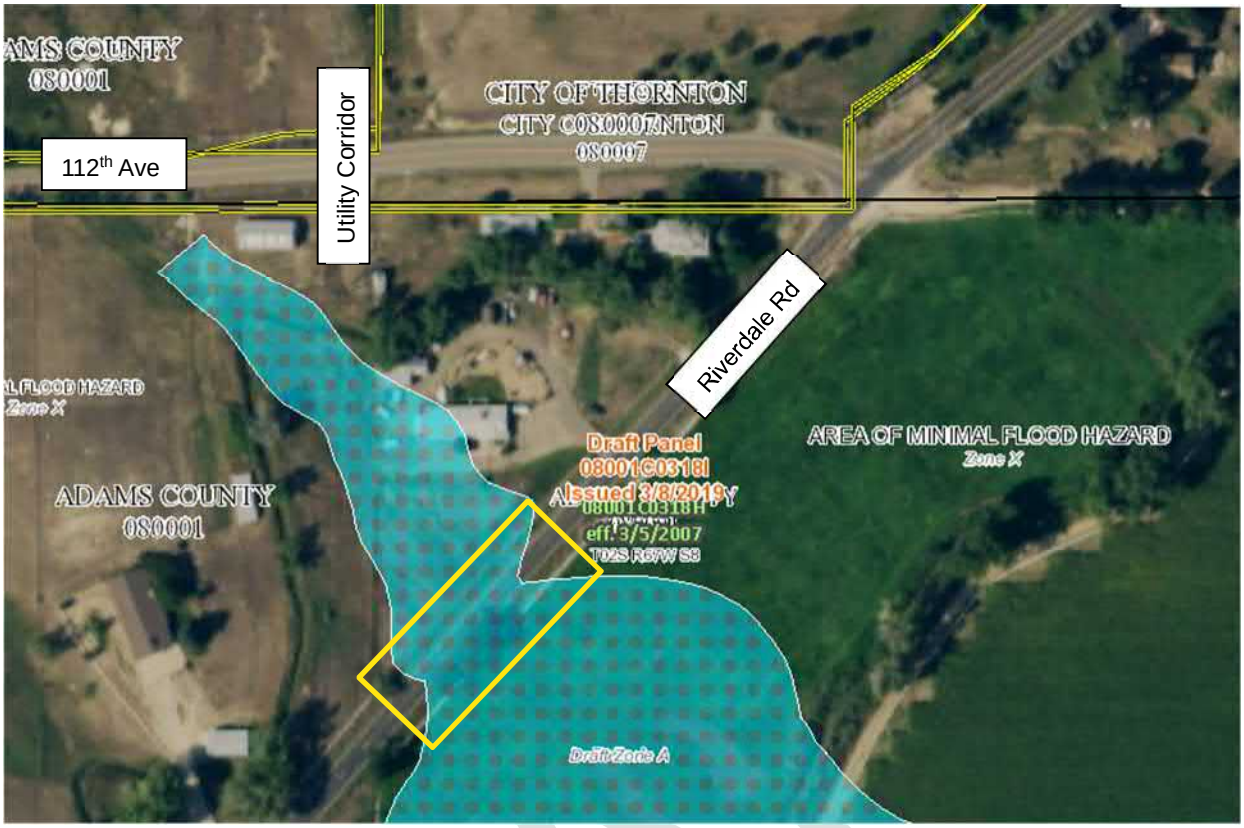

Section 10 - Riverdale Road to Utility Corridor	
Criteria	**Score**
Criteria 1 - Geologic Hazards	5
Criteria 2 - Number of property parcels	1
Criteria 3 - Length in ROW or Easement	10
Criteria 4 - Public Disruption	3
Criteria 5 - Surface Restoration	5
Criteria 6 - Environmental/ Permitting	2
Criteria 7- Pipeline O & M	5

Section 11 – Utility Corridor to Ranch Rd

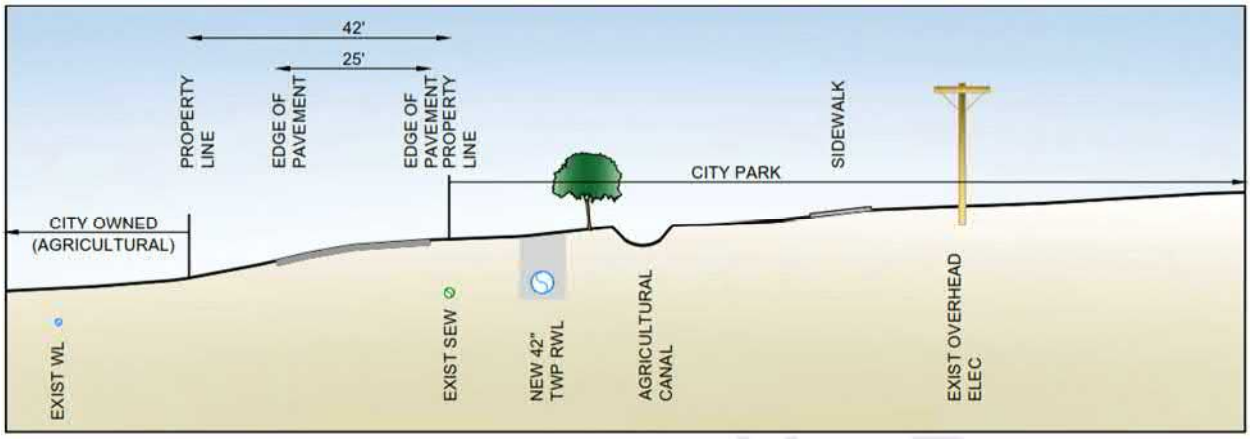

Alignment(s) containing this section:

- Riverdale Road Corridor

This section represents approximately 7650 LF segment of the Riverdale Road Corridor. The section runs northeast to southwest along the northwest side of Riverdale Rd, between the utility corridor and 104th Ave. The segment is parallel to an agricultural canal as well as sanitary sewer and water lines. The first approximately 2910 LF is in Adams County through rural private properties, the remainder is in Thornton through a mixture of undeveloped properties and in close proximity to developed subdivisions; private easement would need to be acquired, but that amount is not quantified. The section shows the proposed pipe between the agricultural canal and sanitary sewer line, though there would be several sanitary sewer and water line crossings. The segment crosses McKay Rd, and four minor side streets, as well as multiple private driveways. Replacement of approximately 420 LF of sidewalk would be required where the proposed corridor passes under the trail. The road crossing at 104th Ave is proposed for jack-and-bore. Just northeast of McKay Rd the segment crosses FEMA Zone A (100-year floodplain), as well as a FEMA Floodway and Zone AE at 104th Ave.

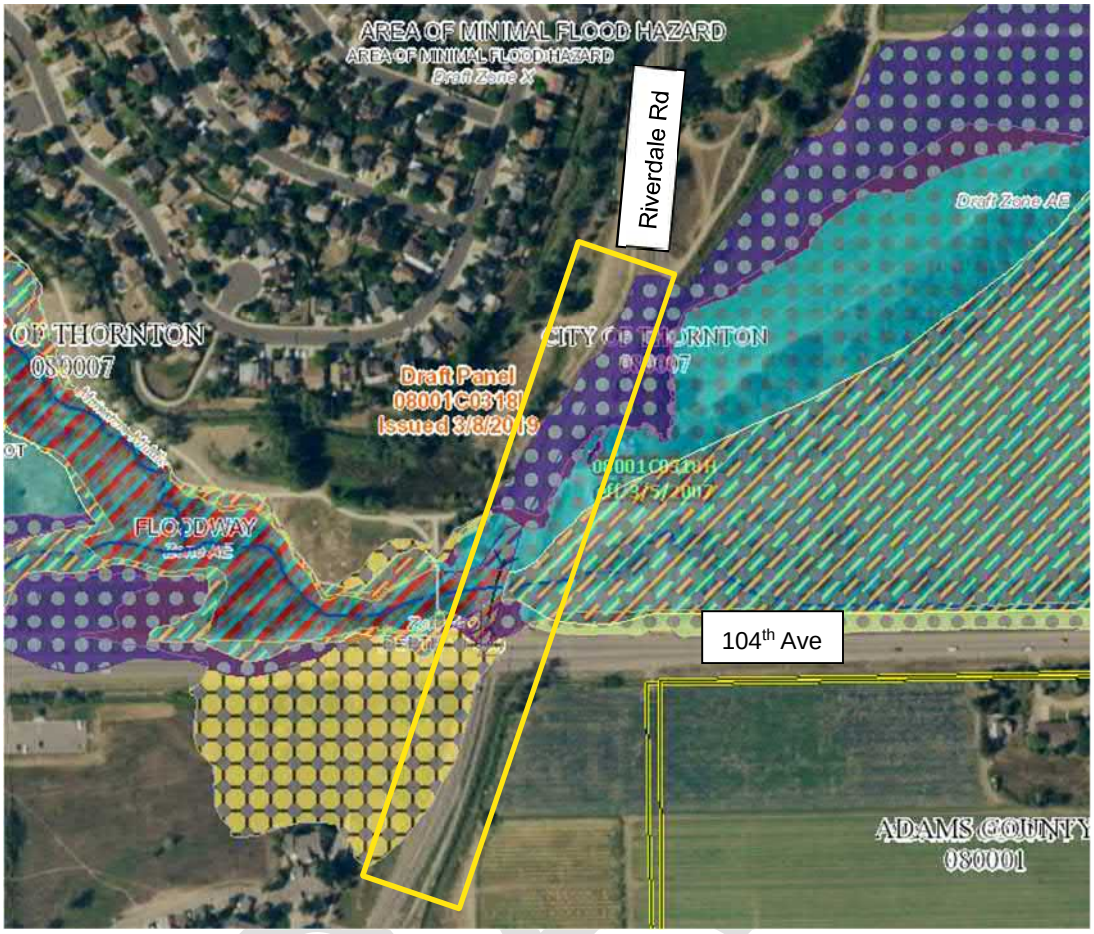

Section 11 - Utility Corridor to Ranch Road	
Criteria	**Score**
Criteria 1 - Geologic Hazards	3
Criteria 2 - Number of property parcels	4
Criteria 3 - Length in ROW or Easement	3
Criteria 4 - Public Disruption	3
Criteria 5 - Surface Restoration	4
Criteria 6 - Environmental/ Permitting	3
Criteria 7- Pipeline O & M	5

Section 12 – Ranch Rd to 100th Ave

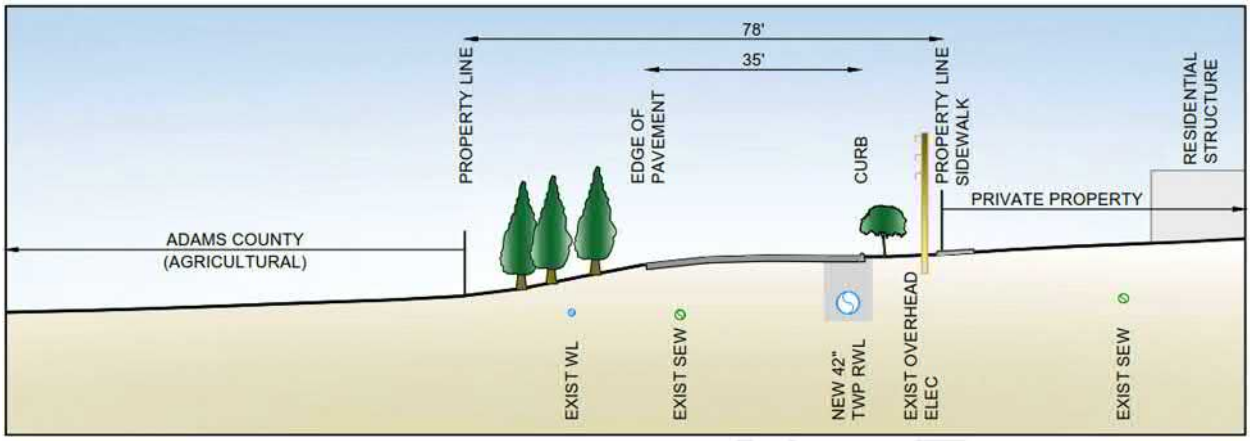

Alignment(s) containing this section:

- Riverdale Road Corridor

This section represents the first approximately 1040 LF segment of the Riverdale Road Corridor. The section runs north to south along the west side of Riverdale Rd, between Ranch Rd and 100th Ave. The section shows the proposed pipe under the curb and gutter of Riverdale Rd on the west side, as the Pine Lake Ranch homes and power lines are close to the road. Adequate spacing from the power pole cannot be maintained, and pipe will be permanently within the road cross-section. Pipe is on the west side to stay within City of Thornton limits. This segment crosses existing sanitary sewer lines in two locations. The segment crosses Ranch Rd and crosses in front of two single-access residential developments.

Section 12 - Ranch Road to 100th Avenue	
Criteria	**Score**
Criteria 1 - Geologic Hazards	3
Criteria 2 - Number of property parcels	10
Criteria 3 - Length in ROW or Easement	5
Criteria 4 - Public Disruption	3
Criteria 5 - Surface Restoration	2
Criteria 6 - Environmental/ Permitting	2
Criteria 7- Pipeline O & M	3

Section 13 – 100th Ave to 96th Ave

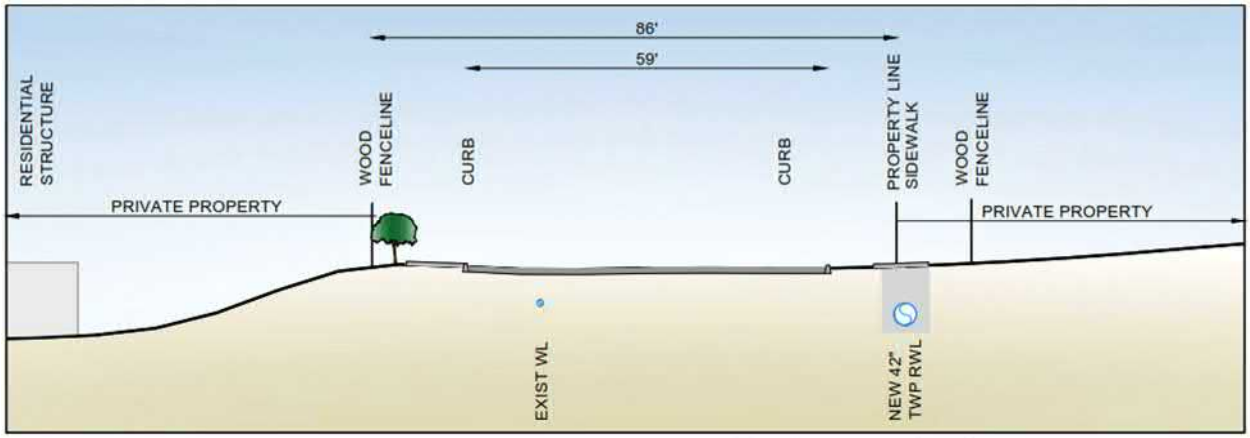

Alignment(s) containing this section:

- Riverdale Road Corridor

This section represents approximately 2640 LF segment of the Riverdale Road Corridor. The section runs north to south along the west side of Riverdale Rd, between 100th and 96th Ave. The majority is in Thornton ROW or private property adjacent to a mixture of undeveloped properties and in close proximity to developed subdivisions. One adjacent property is in Adams County, approximately 700 LF of the segment; private easement would need to be acquired, but that amount is not quantified. The segment crosses an agricultural canal, as well as 100th and 97th Ave. Most of the segment runs underneath an existing sidewalk.

Section 13 - 100th Avenue to 96th Avenue	
Criteria	**Score**
Criteria 1 - Geologic Hazards	3
Criteria 2 - Number of property parcels	9
Criteria 3 - Length in ROW or Easement	5
Criteria 4 - Public Disruption	3
Criteria 5 - Surface Restoration	5
Criteria 6 - Environmental/ Permitting	3
Criteria 7- Pipeline O & M	3

Section 14 – 96th Ave to 89th Ave

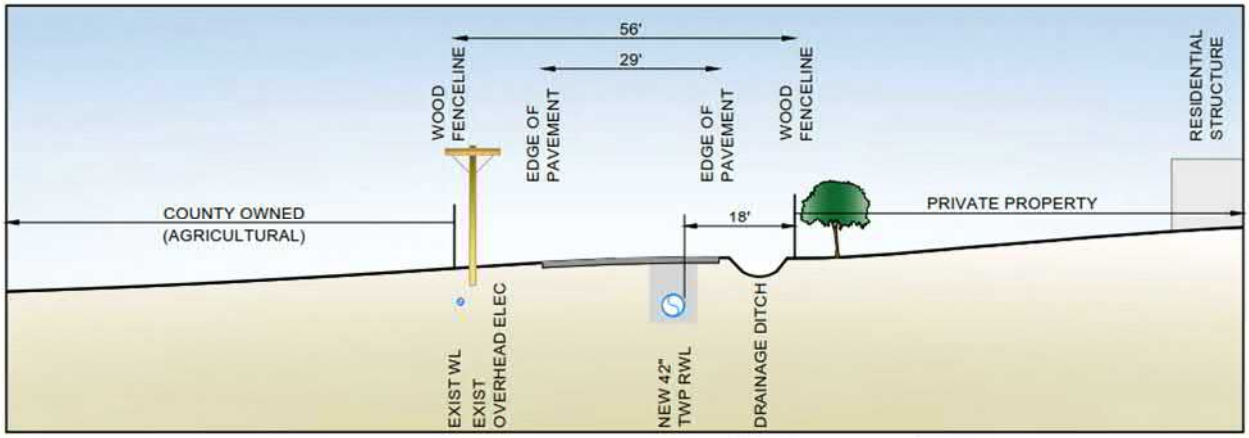

Alignment(s) containing this section:

- Riverdale Road Corridor

This section represents approximately 5000 LF segment of the Riverdale Road Corridor. The section runs northeast to southwest along the west side of Riverdale Rd, between 96th and 89th Ave. The entirety of this segment is in Thornton ROW adjacent to a mixture of undeveloped properties and in close proximity to developed subdivisions. The segment crosses multiple storm sewers, sanitary sewers and waterlines. Road crossings include 96th Ave and four side streets which connect to the Cherrylane and Remington subdivisions. Approximately 1000 LF of sidewalk would need to be replaced between 96th Ave and 94th Dr; private easement would need to be acquired in this area, but that amount is not quantified. Due to the narrow shoulder between the private properties and Riverdale Rd, the pipe is shown within the road cross-section; this applies to approximately 3600 LF of the segment. The remainder can be built in the shoulder either underneath existing sidewalk, or open space.

Section 14 - 96th Avenue to 89th Avenue	
Criteria	**Score**
Criteria 1 - Geologic Hazards	5
Criteria 2 - Number of property parcels	10
Criteria 3 - Length in ROW or Easement	5
Criteria 4 - Public Disruption	3
Criteria 5 - Surface Restoration	2
Criteria 6 - Environmental/ Permitting	3
Criteria 7- Pipeline O & M	3

Section 15 – Utility Corridor to McKay Rd

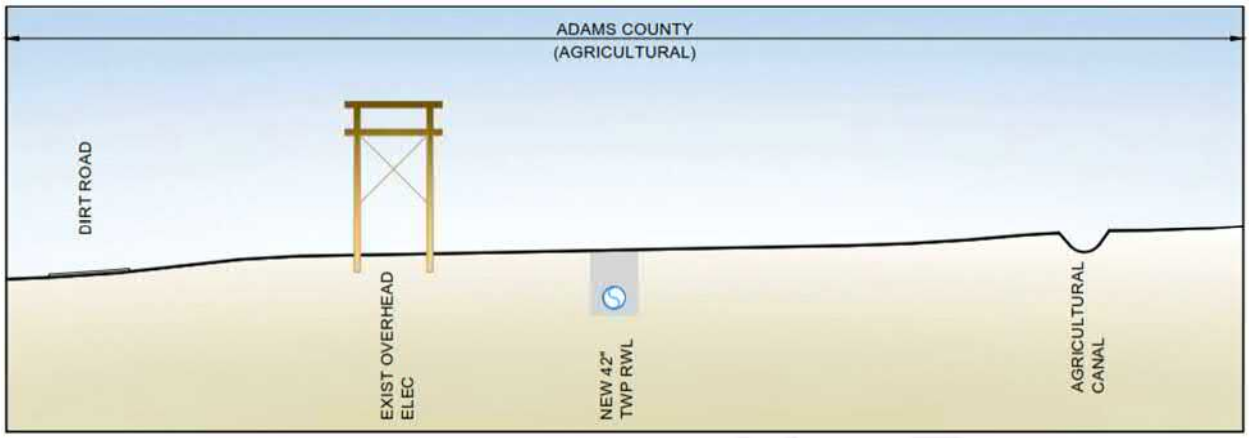

Alignment(s) containing this section:

- McKay Road Corridor
- Modified McKay Road Corridor

This section represents an approximately 3100 LF segment of two of the alignment alternatives. The section runs north to south parallel to Xcel distribution towers. As the segment parallels the Xcel towers, an existing utility easement could be acquired. This segment passes through rural private properties in Adams County. In addition to the private properties that would require protection, the segment crosses an agricultural canal as well as the Lower Clear Creek Canal. Roadway crossings are required at 112th Ave and Riverdale Rd. The alignments follow the Xcel towers along the East side, and after the crossing of the Lower Clear Creek Canal the alignment crosses to the west side of the towers in order to follow McKay Rd (see Section 19). Just north and south of Riverdale Rd the segment crosses FEMA Zone A (100-year floodplain).

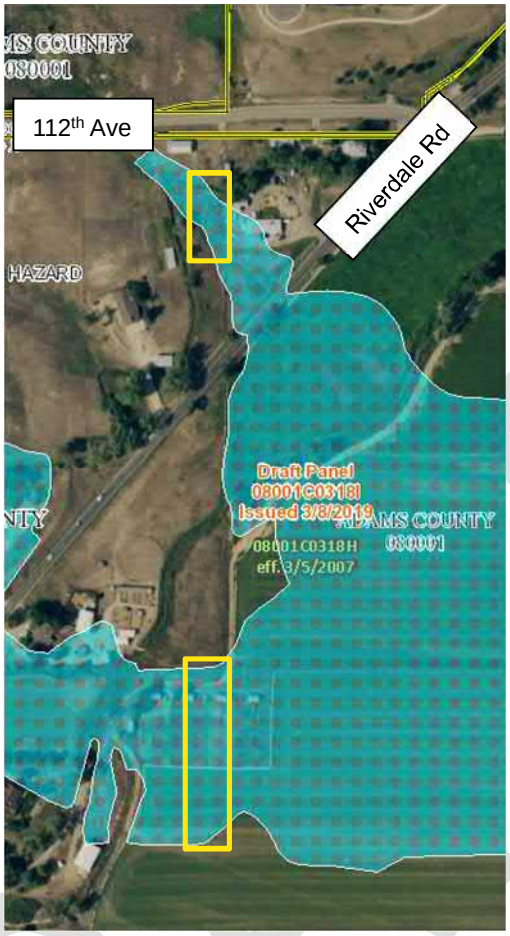

Section 15 - Utility Corridor to McKay Rd	
Criteria	**Score**
Criteria 1 - Geologic Hazards	5
Criteria 2 - Number of property parcels	5
Criteria 3 - Length in ROW or Easement	10
Criteria 4 - Public Disruption	9
Criteria 5 - Surface Restoration	8
Criteria 6 - Environmental/ Permitting	9
Criteria 7- Pipeline O & M	7

Section 16 – Sports Fields to 96th Avenue

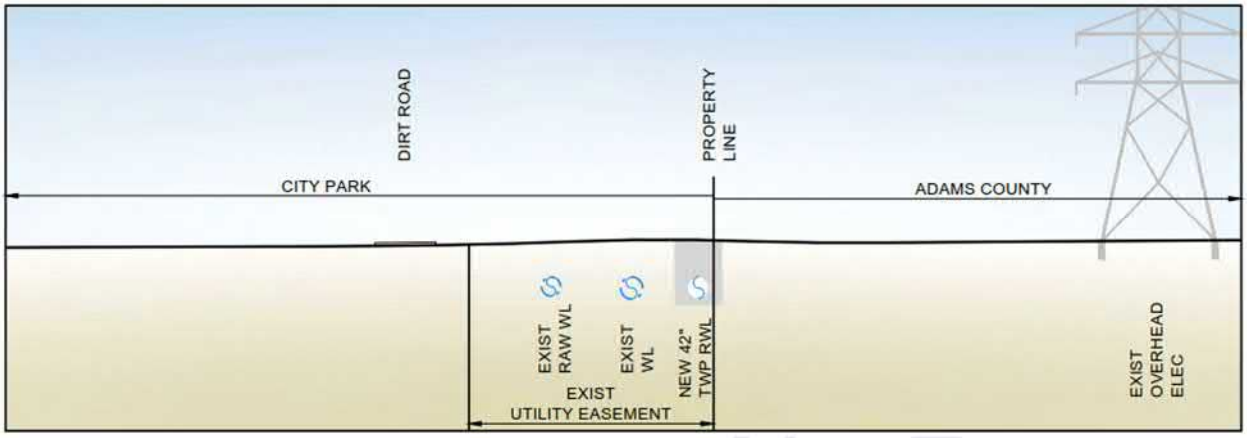

Alignments containing this section:

- McKay Road Corridor

This section represents an approximately 6000 LF segment of the McKay Road Corridor. The section runs east to west along the north side of Fukaye Fields, then turns south parallel to the existing pipeline corridor owned by Thornton and ends at the southwest corner of West Sprat Platte Lake. The proposed alignment follows the existing pipeline easement and fits inside the easement in some areas, though an additional 20 feet or so of permanent easement would need to be acquired for maintenance of the pipe if this alignment is chosen. This segment has multiple path crossings that would require minor concrete path repairs. The alignment would cross the existing water and raw water pipes once to switch sides from the west to east of the easement, at the same point where the existing pipes switch to the west side of the Xcel towers, crossing both the transmission and distribution towers. Just west of West Sprat Platte Lake the segment is within FEMA Zone AE (100-year floodplain).

Section 16 - Sports Fields to 96th Avenue	
Criteria	**Score**
Criteria 1 - Geologic Hazards	5
Criteria 2 - Number of property parcels	8
Criteria 3 - Length in ROW or Easement	10
Criteria 4 - Public Disruption	7
Criteria 5 - Surface Restoration	8
Criteria 6 - Environmental/ Permitting	8
Criteria 7- Pipeline O & M	7

Section 17 – 96th Ave to Utility Easement

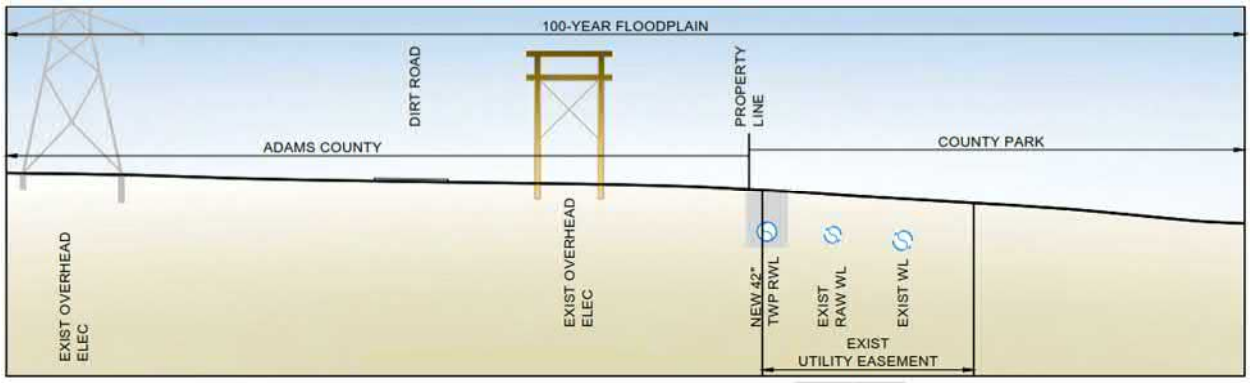

Alignments containing this section:

- McKay Road Corridor

This section represents an approximately 2600 LF segment of the McKay Road Corridor. The section runs northeast to southwest along the existing pipeline corridor owned by Thornton and ends where the South Platte River bows toward the pipeline, north of North Dahlia Lake. The proposed alignment follows the existing pipeline easement and fits inside the easement in some areas, though an additional 20 feet or so of permanent easement would need to be acquired for maintenance of the pipe if this alignment is chosen. This segment has multiple dirt access road crossings that would require minor repairs. The alignments follow the Xcel towers along the northwest side. For the majority of the segment length, it is within FEMA Zone AE (100-year floodplain).

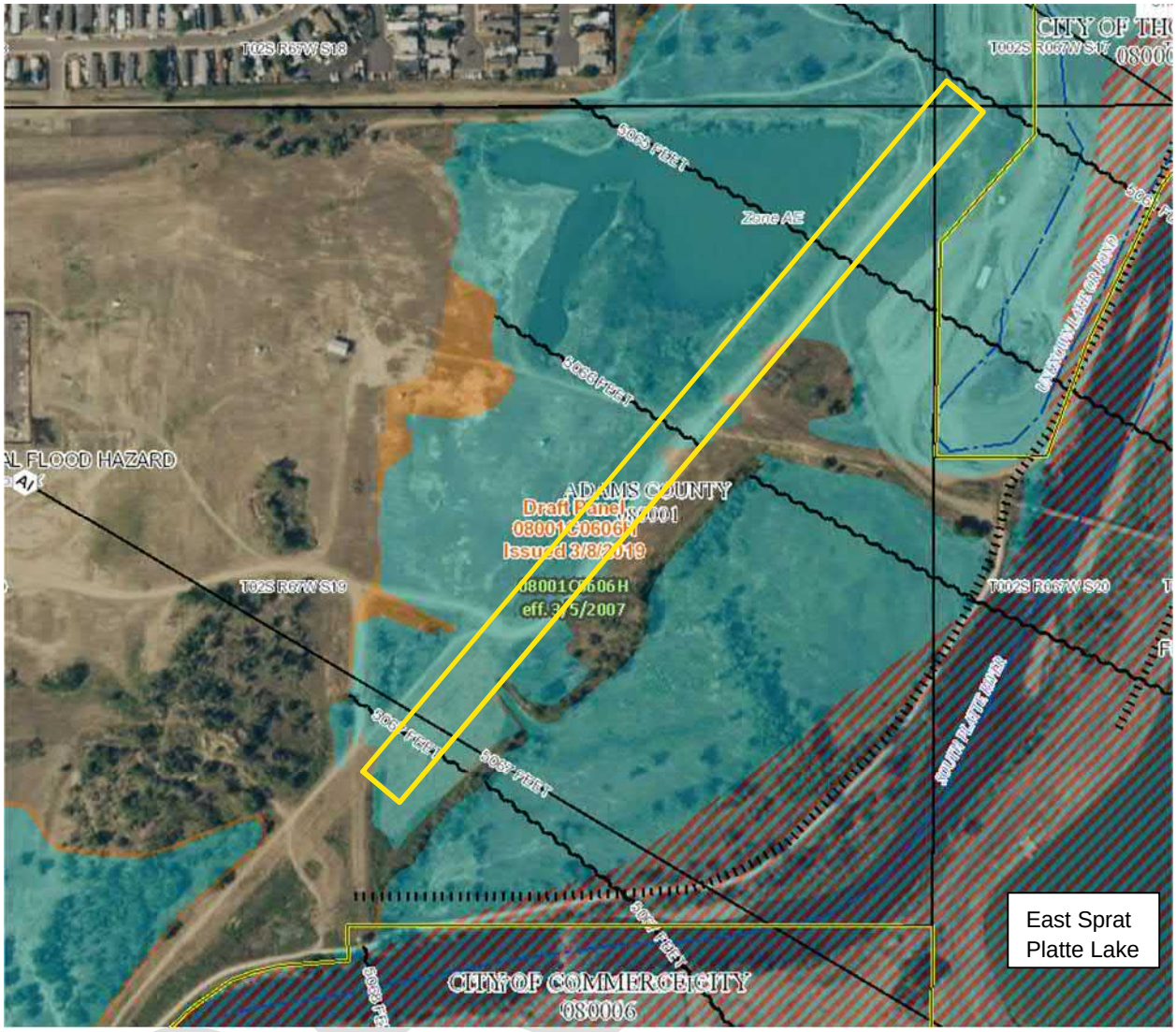

Section 17 - 96th Avenue to Utility easement	
Criteria	**Score**
Criteria 1 - Geologic Hazards	5
Criteria 2 - Number of property parcels	9
Criteria 3 - Length in ROW or Easement	10
Criteria 4 - Public Disruption	9
Criteria 5 - Surface Restoration	8
Criteria 6 - Environmental/ Permitting	8
Criteria 7- Pipeline O & M	7

Section 18 – Utility Easement to 89th Ave

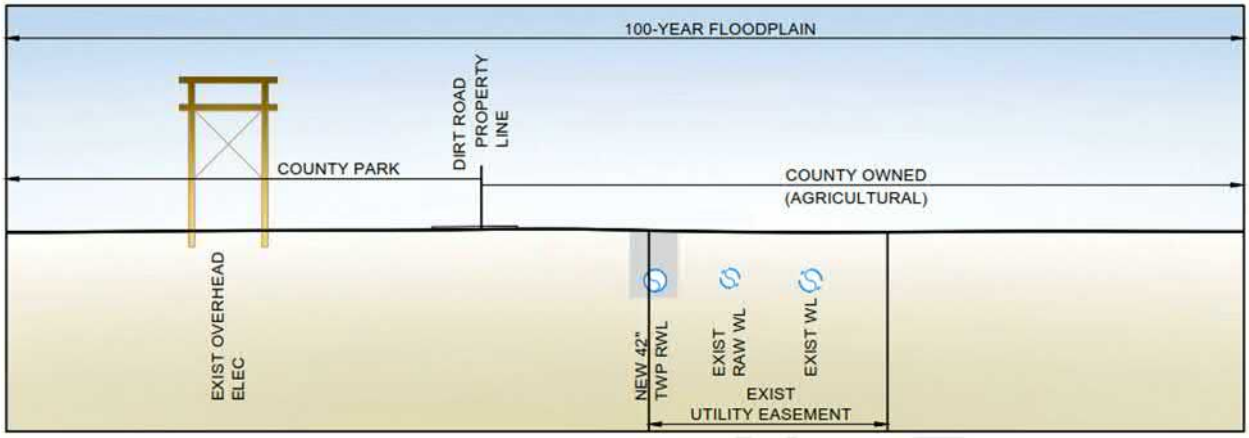

Alignments containing this section:

- McKay Road Corridor
- Modified McKay Road Corridor

This section represents an approximately 2600 LF segment of the McKay Road Corridor. The section runs northeast to southwest along the existing pipeline corridor owned by Thornton and ends at the southeast corner of Colorado Blvd and Riverdale Rd. The proposed alignment follows the existing pipeline easement to where it ends at Riverdale Rd and fits inside the easement in some areas, though an additional 20 feet or so of permanent easement would need to be acquired for maintenance of the pipe if this alignment is chosen. This segment has a private driveway crossing as well as multiple dirt access road and concrete path crossings that would require minor repairs. The alignments follow the Xcel towers along the northwest side before turning toward Riverdale Road (see Section 8). A portion of the segment length is within FEMA Zone AE (100-year floodplain).

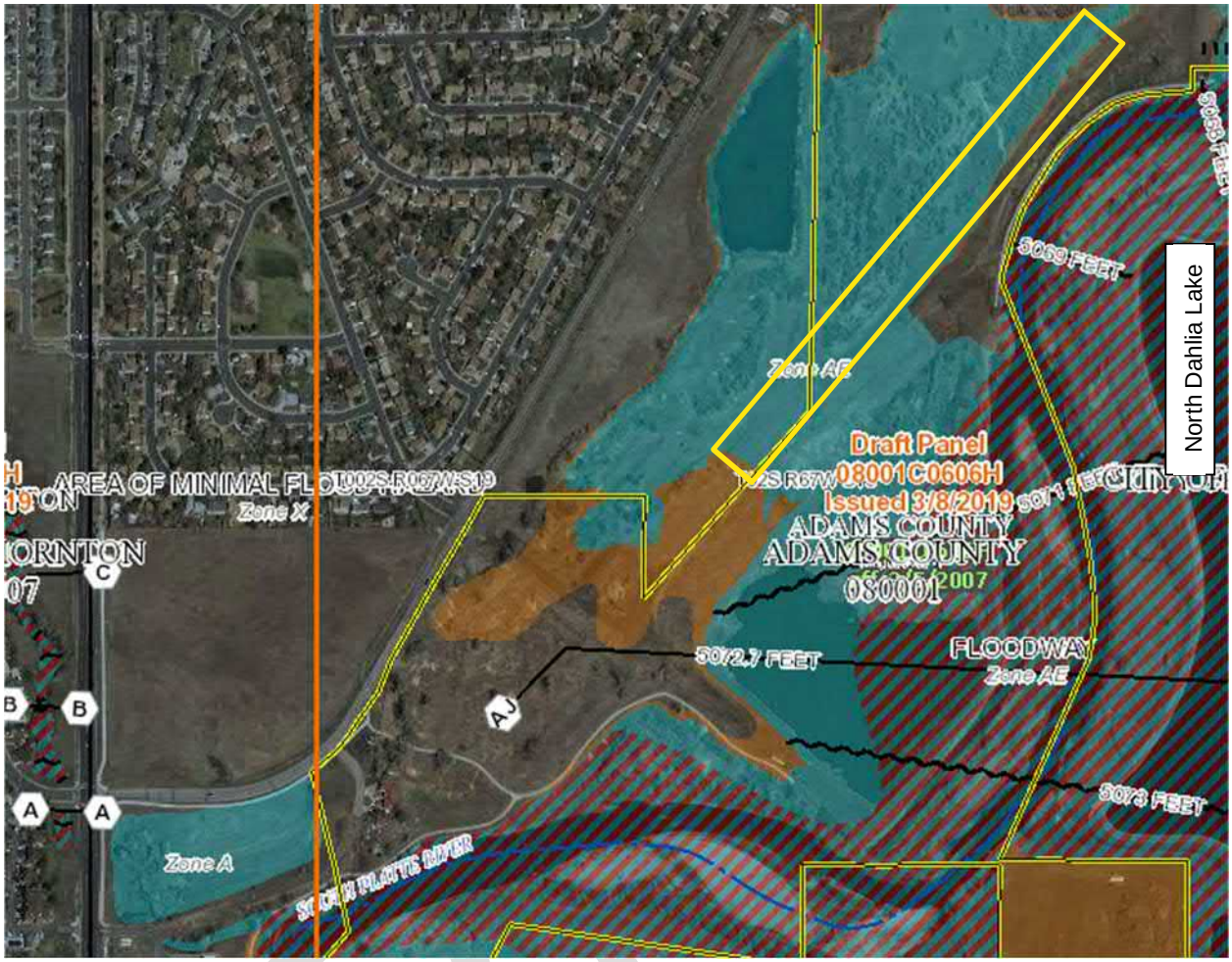

Section 18 - Utility Easement to 89th Avenue	
Criteria	**Score**
Criteria 1 - Geologic Hazards	3
Criteria 2 - Number of property parcels	8
Criteria 3 - Length in ROW or Easement	10
Criteria 4 - Public Disruption	8
Criteria 5 - Surface Restoration	6
Criteria 6 - Environmental/ Permitting	8
Criteria 7- Pipeline O & M	8

Section 19 – McKay Road

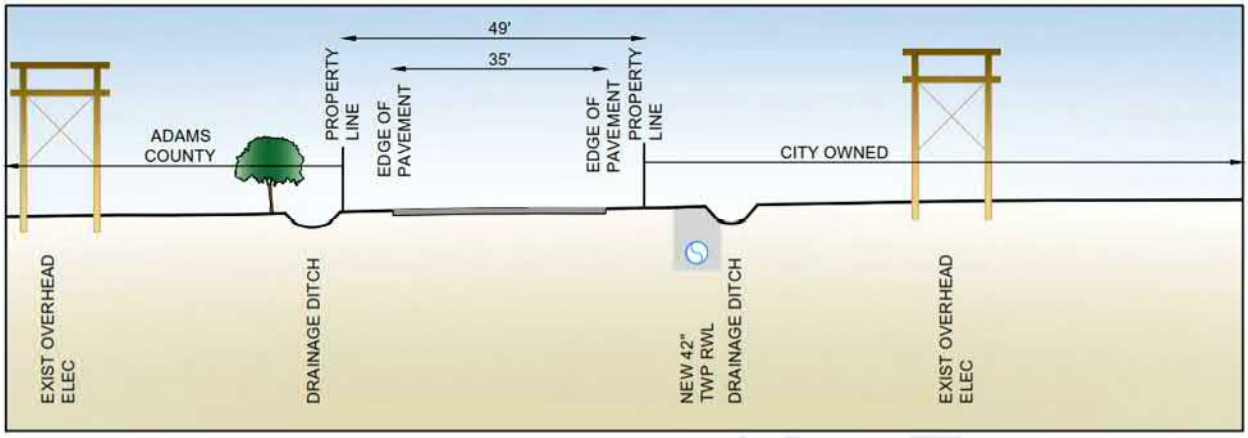

Alignments containing this section:

- McKay Road Corridor
- Modified McKay Road Corridor

This section represents an approximately 2800 LF segment of the McKay Road Corridor, and a 6500 LF segment of the Modified McKay Road Corridor. The section runs north to south along McKay Road; the McKay Road Corridor turns west at the Fukaye Fields (see Section 16), and the Modified McKay Road Corridor continues south along the west side of McKay Rd. Just past the segment represented by Section 15, the alignment crosses McKay Rd to maintain adequate separation from the Xcel towers. Just north of 104th Ave, the power lines cross to the west side of McKay Rd. There is 40 feet of space between the edge of road and the utility pole, which could fit the proposed pipe. South of 104th Ave, the Modified McKay Road Corridor follows McKay Road along the west side, with approximately 1700 LF in Adams County; private easement would need to be acquired, but that amount is not quantified. The segment then crosses 100th Ave and runs between West Sprat Platte Lake and McKay Rd where it meets the Colorado Front Range Trail (see Section 20). Power lines are close to the edge of road and are present on both sides of McKay Rd in this area. Drainage ditches run intermittently and parallel to the roadway. Both alignments represented by the section cross McKay Rd and 104th Ave, and the Modified McKay Rd alignment also crosses the road into Fukaye Fields, and 100th Ave. The road crossing at 104th Ave and the stream crossing at Grange Hall Creek are proposed for jack-and-bore. It is noted that there is a widening project proposed for McKay Rd, and if an alignment containing this representative section is chosen, coordination with that project would be required. Both alignments cross Grange Hall Creek north of 104th Ave, a floodway and flood hazard area FEMA Zone AE (100-year floodplain). The segment of the Modified McKay Road Corridor which follows McKay Road adjacent to West Sprat Platte Lake also runs through a FEMA Floodway and flood hazard area Zone AE (100-year floodplain).

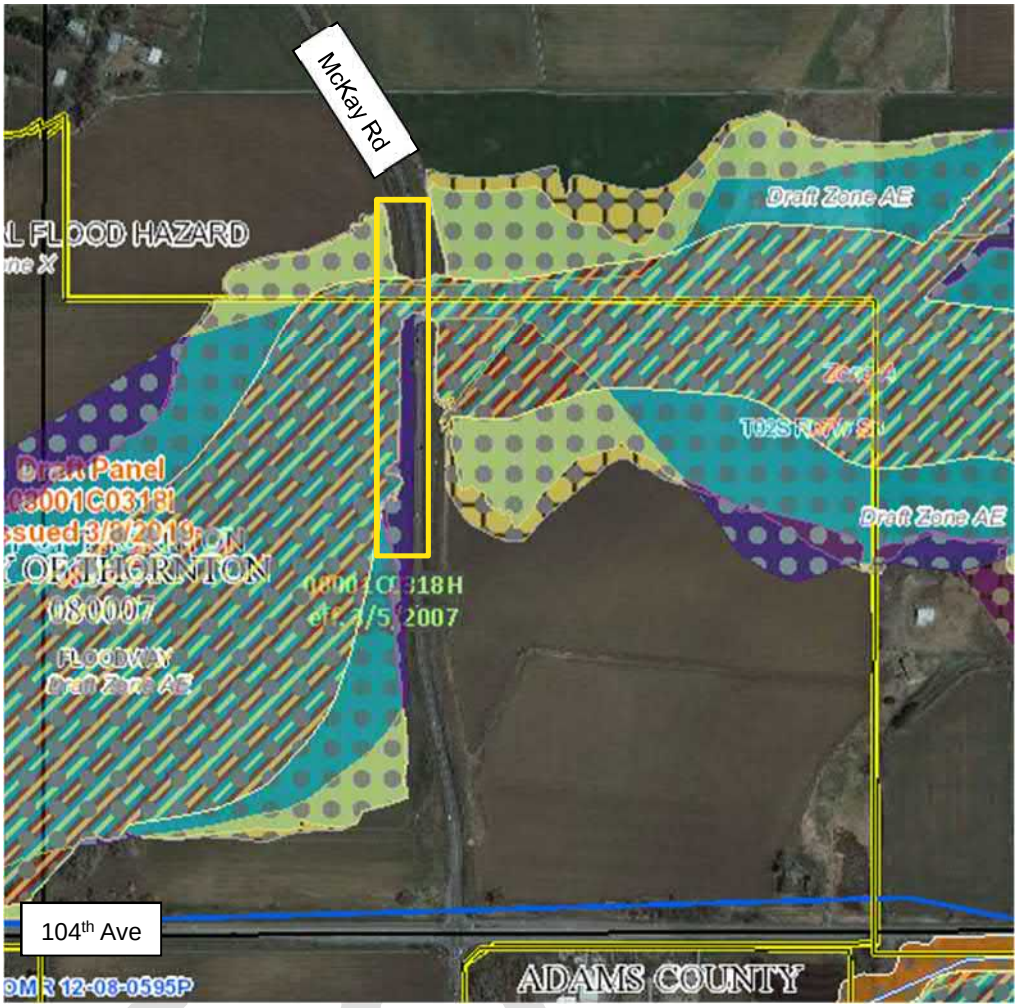
McKay Rd
Draft Zone AE
L FLOOD HAZARD
ne X
Draft Panel
Draft Zone AE
FLOODWAY
Draft Zone AE
104th Ave
ADAMS COUNTY

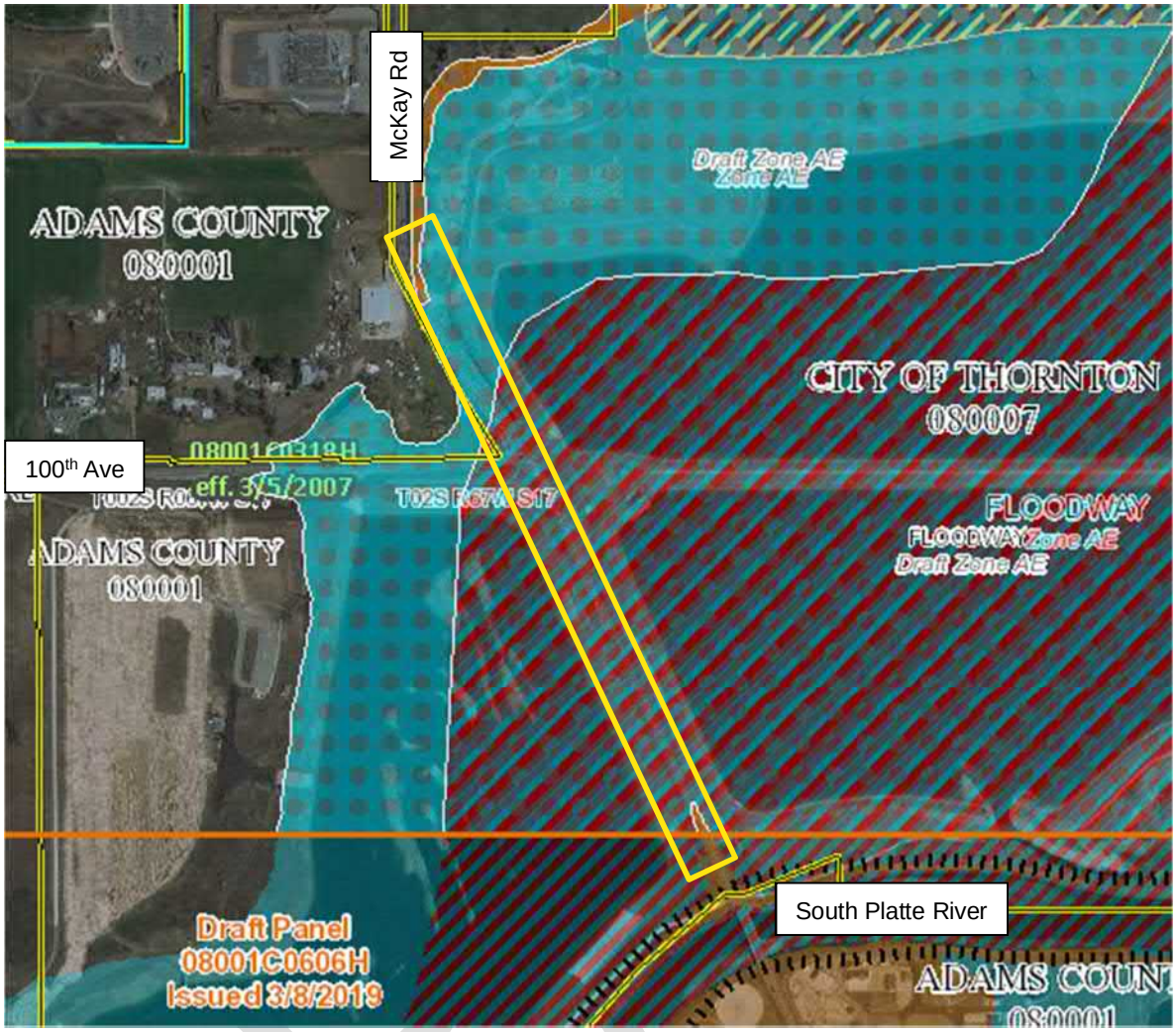

Section 19 - McKay Road	
Criteria	**Score**
Criteria 1 - Geologic Hazards	5
Criteria 2 - Number of property parcels	9
Criteria 3 - Length in ROW or Easement	10
Criteria 4 - Public Disruption	4
Criteria 5 - Surface Restoration	5
Criteria 6 - Environmental/ Permitting	4
Criteria 7- Pipeline O & M	3

Section 20 – Colorado Front Range Trail

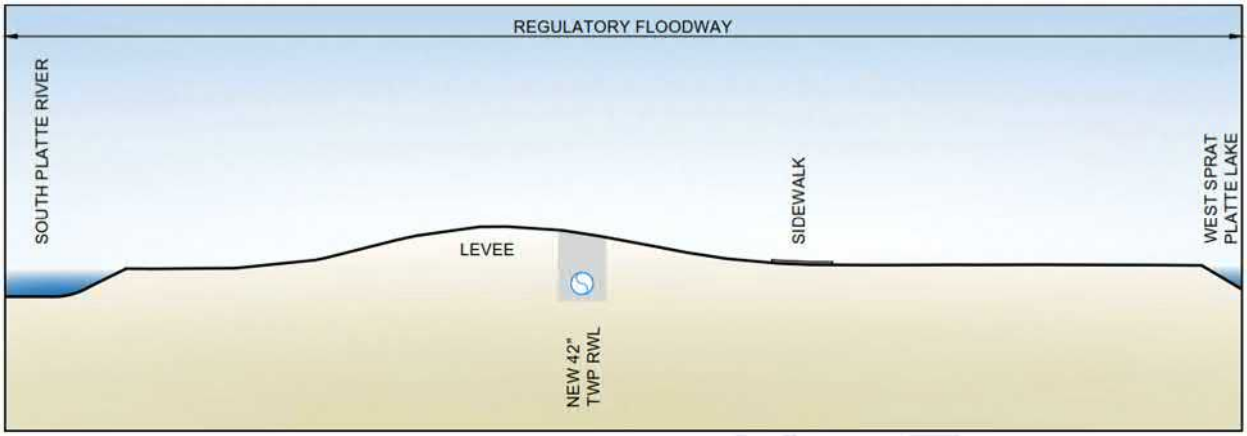

Alignments containing this section:

- Modified McKay Road Corridor

This section represents an approximately 5500 LF segment of the Modified McKay Road Corridor. The section runs northeast to southwest along the Colorado front Range trail, until it meets the existing utility corridor owned by Thornton (see Section 18). The entirety of this segment is in Adams County; private easement would need to be acquired. The area between West Sprat Platte Lake and the South Platte River is narrow (approximately 100 feet from the edge of the lake embankment to the treeline along the river, so it is assumed that the trail would have to be replaced; this is a distance of approximately 2050 LF. It is noted that the USACE has plans for a bank stabilization project in this area, and coordination would be required if this alignment is chosen. Past this stretch, the topography is open, and the trail can likely be avoided. Due to the proximity of this segment to the South Platte River, nearly the entire length is within a FEMA Floodway or Zone AE (100-year floodplain).

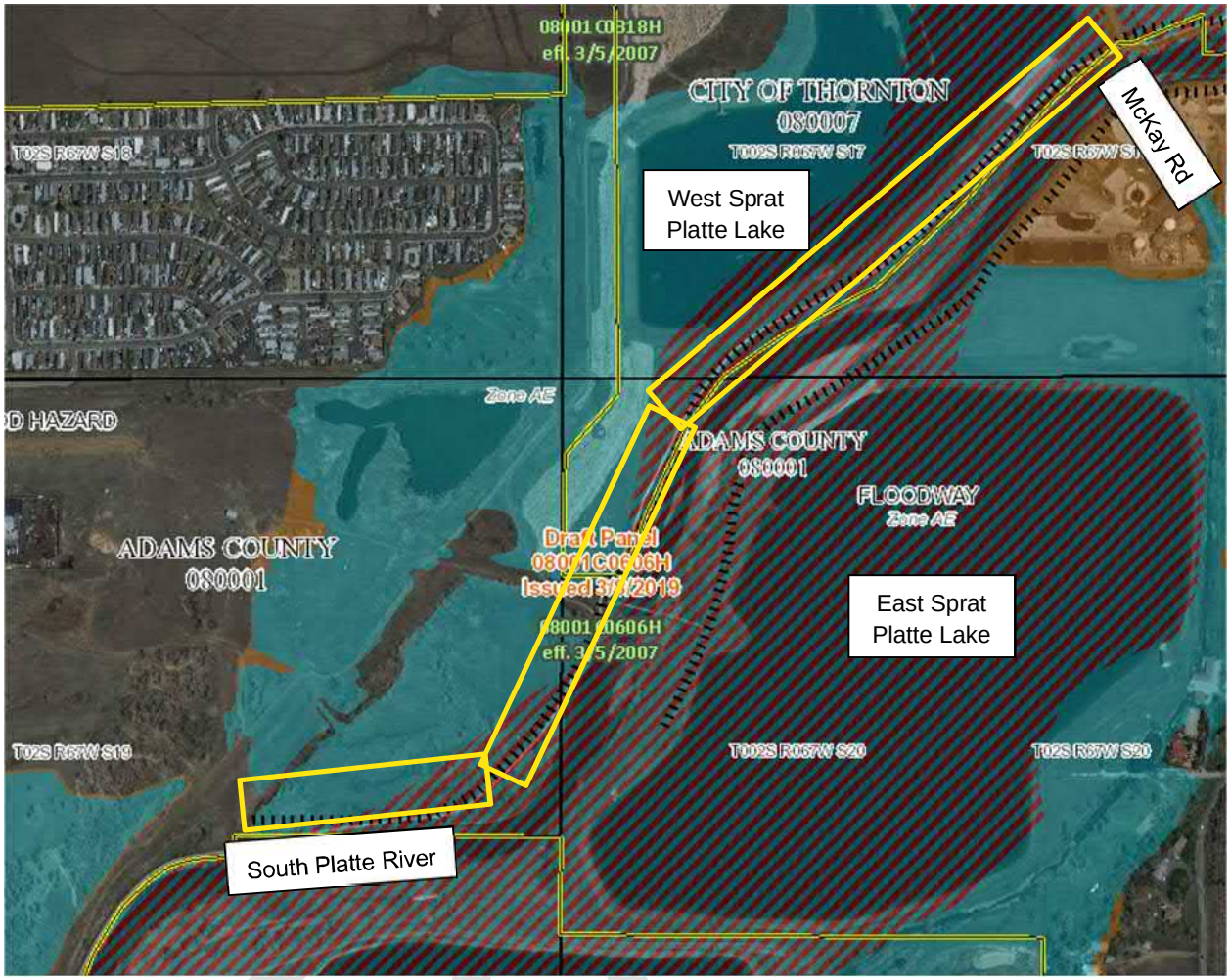

Section 20 - Colorado front Range Trail	
Criteria	**Score**
Criteria 1 - Geologic Hazards	3
Criteria 2 - Number of property parcels	9
Criteria 3 - Length in ROW or Easement	10
Criteria 4 - Public Disruption	8
Criteria 5 - Surface Restoration	7
Criteria 6 - Environmental/ Permitting	8
Criteria 7- Pipeline O & M	10

Appendix 2 – Non-Economic Scoring

Phase II Alignment Non-Economic Scoring

CH2M Identified Corridor											
Representative Section #	Segment Description	Segment Length (LF)		Criteria 1 - Geologic Hazards	Criteria 2 - Number of property parcels	Criteria 3 - Length in ROW or Esmnt	Criteria 4 - Public Disruption	Criteria 5 - Surface Restoration	Criteria 6 - Environmental/ Permitting	Criteria 7- Pipeline O & M	Length Weighted Average Summ of Criteria 1-7
Section 1	120th Avenue	2,477		5	10	10	5	5	5	7	
Section 2	Utility Corridor 120th to 116th	2,980		5	10	10	7	8	9	8	
Section 3	Utility Corridor 116th to 112th	2,798		5	9	10	4	4	9	8	
Section 4	112th Avenue	6,367		5	10	10	1	1	5	3	
Section 6	Colorado Boulevard to 104th	5,247		5	10	10	1	1	5	1	
Section 7	Colorado Blvd to 89th Avenue	9,974		5	10	10	1	1	5	1	
Section 8	89th Avenue to WBWTP	2,016		5	9	4	4	6	5	5	
		31,859		5.00	9.85	9.62	2.33	2.55	5.73	3.39	38.45

Minimized Roadway Corridor											
Representative Section #	Segment Description	Segment Length (LF)		Criteria 1 - Geologic Hazards	Criteria 2 - Number of property parcels	Criteria 3 - Length in ROW or Esmnt	Criteria 4 - Public Disruption	Criteria 5 - Surface Restoration	Criteria 6 - Environmental/ Permitting	Criteria 7- Pipeline O & M	Length Weighted Average Summ of Criteria 1-7
Section 1	120th Avenue	2,477		5	10	10	5	5	5	7	
Section 2	Utility Corridor 120th to 116th	2,980		5	10	10	7	8	9	8	
Section 3	Utility Corridor 116th to 112th	2,798		5	9	10	4	4	9	8	
Section 4	112th Avenue (partial)	3,394		5	10	10	1	1	5	3	
Section 5	Cherry Lane to Colorado Blvd	4,267		5	10	5	3	2	3	4	
Section 6	Colorado Boulevard to 104th (partial)	3,402		5	10	10	1	1	5	1	
Section 7	Colorado Blvd to 89th Avenue	9,974		5	10	10	1	1	5	1	
Section 8	89th Avenue to WBWTP	2,016		5	9	4	4	6	5	5	
		31,308		5.00	9.85	8.93	2.62	2.71	5.47	3.65	38.22

Riverdale Road Corridor											
Representative Section #	Segment Description	Segment Length (LF)		Criteria 1 - Geologic Hazards	Criteria 2 - Number of property parcels	Criteria 3 - Length in ROW or Esmnt	Criteria 4 - Public Disruption	Criteria 5 - Surface Restoration	Criteria 6 - Environmental/ Permitting	Criteria 7- Pipeline O & M	Length Weighted Average Summ of Criteria 1-7
Section 9	120th Avenue to Riverdale Road	1,473		5	8	1	8	7	5	7	
Section 10	Riverdale Road to Utility Corridor	5,860		5	1	10	3	5	2	5	
Section 11	Utility Corridor to Ranch Road	7,648		3	4	3	3	4	3	5	
Section 12	Ranch Road to 100th Avenue	1,045		3	10	5	3	2	2	3	
Section 13	100th Avenue to 96th Avenue	2,640		3	9	5	3	5	3	3	
Section 14	96th Avenue to 89th Avenue	4,997		5	10	5	3	2	3	3	
Section 8	89th Avenue to WBWTP	2,016		5	9	4	4	6	5	5	
		25,680		4.12	5.86	5.24	3.37	4.19	3.00	4.44	30.21

McKay Road Corridor											
Representative Section #	Segment Description	Segment Length (LF)		Criteria 1 - Geologic Hazards	Criteria 2 - Number of property parcels	Criteria 3 - Length in ROW or Esmnt	Criteria 4 - Public Disruption	Criteria 5 - Surface Restoration	Criteria 6 - Environmental/ Permitting	Criteria 7- Pipeline O & M	Length Weighted Average Summ of Criteria 1-7
Section 1	120th Avenue	2,477		5	10	10	5	5	5	7	
Section 2	Utility Corridor 120th to 116th	2,980		5	10	10	7	8	9	8	
Section 3	Utility Corridor 116th to 112th (partial)	2,767		5	9	10	4	4	9	8	
Section 15	Utility Corridor to McKay Rd	3,101		5	5	10	9	8	9	7	
Section 19	McKay Road (partial)	2,819		5	6	10	4	5	4	3	
Section 16	Sports Fields to 96th Avenue	6,001		5	8	10	7	8	8	7	
Section 17	96th Avenue to Utility easement	2,592		5	9	10	9	8	8	7	
Section 18	Utility Easement to 89th Avenue	4,004		3	8	10	8	6	8	8	
Section 8	89th Avenue to WBWTP (partial)	1,881		5	9	4	4	6	5	5	
		28,622		4.72	8.11	9.61	6.58	6.65	7.46	6.82	49.94

Modified McKay Road Corridor											
Representative Section #	Segment Description	Segment Length (LF)		Criteria 1 - Geologic Hazards	Criteria 2 - Number of property parcels	Criteria 3 - Length in ROW or Esmnt	Criteria 4 - Public Disruption	Criteria 5 - Surface Restoration	Criteria 6 - Environmental/ Permitting	Criteria 7- Pipeline O & M	Length Weighted Average Summ of Criteria 1-7
Section 1	120th Avenue	2,477		5	10	10	5	5	5	7	
Section 2	Utility Corridor 120th to 116th	2,980		5	10	10	7	8	9	8	
Section 3	Utility Corridor 116th to 112th (partial)	2,767		5	9	10	5	4	9	8	
Section 15	Utility Corridor to McKay Rd	3,101		5	5	10	9	8	9	7	
Section 19	McKay Road	6,478		5	9	10	4	5	4	3	
Section 20	Colorado front Range Trail	5,444		3	9	10	8	7	8	10	
Section 18	Utility Easement to 89th Avenue	4,004		3	8	10	8	6	8	8	
Section 8	89th Avenue to WBWTP (partial)	1,881		5	9	4	4	6	5	5	
		29,131		4.35	8.62	9.61	6.32	6.11	6.97	6.88	48.85

Appendix 3 – Alignment Cost Estimates

WBS Lvl 1	Location	Description	Takeoff Quantity	Grand Total Price	Grand Total Amount
CH2M Corridor		**CH2M Identified Corridor**			
		Jack & Bore	760.00 lf	8,110.32 /lf	6,163,844
		Open-Cut & Cover	31,859.00 lf	848.47 /lf	27,031,445
		CH2M Corridor CH2M Identified Corridor	**31,859.00 lf**	**1,041.94 /lf**	33,195,290
McKay Rd Corridor		**McKay Road Corridor**			
		Jack & Bore	1,235.00 lf	5,856.82 /lf	7,233,174
		Open-Cut & Cover	28,622.00 lf	689.49 /lf	19,734,577
		McKay Rd Corridor McKay Road Corridor	**28,622.00 lf**	**942.20 /lf**	26,967,751
Minimized		**Minimized Roadway Corridor**			
		Jack & Bore	760.00 lf	8,110.32 /lf	6,163,844
		Open-Cut & Cover	31,308.00 lf	858.15 /lf	26,866,946
		Minimized Minimized Roadway Corridor	**31,308.00 lf**	**1,055.03 /lf**	33,030,790
Modified McKAy		**Modified McKay Road Corridor**			
		Jack & Bore	1,235.00 lf	5,856.82 /lf	7,233,174
		Open-Cut & Cover	29,131.00 lf	761.70 /lf	22,189,126
		Modified McKAy Modified McKay Road Corridor	**29,131.00 lf**	**1,010.00 /lf**	29,422,299
Riverdale Rd		**Riverdale Road Corridor**			
		Jack & Bore	435.00 lf	5,846.02 /lf	2,543,017
		Open-Cut & Cover	25,680.00 lf	751.00 /lf	19,285,774
		Riverdale Rd Riverdale Road Corridor	**25,680.00 lf**	**850.03 /lf**	21,828,791

Opinion of Probable Construction Cost
Thornton Reach, Phase II
Alternative Alignments

Project name	20-009 Thornton Reach Phase II Thornton CO USA
Client	Thornton Water
Architect	AECOM
Engineer	AECOM
Document	Thornton Reach
Estimator	Mark McClenahan, CPE
Labor rate table	1 AECOM RATES 20
Equipment rate table	Equip - ACM 20ld wrk
Job size	32000 LF
Duration	24 Mo
Bid date	5/1/2020 05:00 PM
Project	Raw Water Pipeline
Bus Line	Water
Section	West
Office	Denver
Principal Party	Bill Wemmert
Estimating Office	Latham, NY
Contract 1	Martin Hammer
Contact 2	Mark McClenahan
Estimate Class Lvl	4
Estimate Purpose	Conceptual/schematic
FY Estimate	2020
Estimate Number	20-009
Start Date	2020
LD's	NA
Award Date	TBD
Completion Date	TBD
Notes	*Opinion of Probable Construction Cost* *AECOM AREST Estimate No. 20-009_Phase II, Rev02* *AECOM Project No. 60619101 Task Code: 1.1.8 Cost Est.* *Phase II is based on Concept design* *Design Development <15%* *Thornton Reach Phase II* *Construction of approximately 33,000lf (6.25miles) of 42" WSP Raw Water Conveyance Pipeline from Phase I @ E 120 St to the West Brown Water Treatment Plant.* *Alternative Alignments and lengths:* *CH2M-IDENTIFIED TWP CORRIDOR: 31,859 lf* *RIVERDALE ROAD CORRIDOR: 25,680 lf* *MINIMIZED ROADWAY CORRIDOR: 31,308 lf* *MCKAY ROAD – EXISTING PIPELINE CORRIDOR: 28,622 lf*

MODIFIED MCKAY ROAD CORRIDOR: 29,131 lf
Each Alternative Alignment includes cost considerations for:
Degree of Difficulty / Productivity (lf/crew day)
Conflicts with other utilities
Conflicts with OH Power / Communication Lines
Traffic Control & Protection
Groundwater/ Dewatering of excavations
Surface Restoration Requirements
Jack & Bores
Specifically Excluded from this cost comparison are:
Environmental and Permitting issues
Land Use Fees, Purchase/Leasing, ROW's, variances and other "soft costs"
Engineering and Design costs
Inspection and tesing, Special Inspections
Police for Traffic Protection
Hazardous or Contaminated materials, groundwater remediation
Geotechnical Engineering, Support or Inspection
Rock Blasting & Removal/Disposal
Potholing, Exploratory Excavation
Costs presented in this estimate should be considered comparitive for the purpose of evaluating the different alternatives and not necessarily definitive.

"The enclosed Engineer's Estimate is only an estimate of possible construction costs for budgeting purposes. This estimate is limited to the conditions existing at its issuance and is not a guaranty of actual price or cost. Uncertain market conditions such as, but not limited to: local labor or contractor availability, wages, other work, material market fluctuations, price escalations, force majeure events, and developing bidding conditions etc may affect the accuracy of this estimate. AECOM is not responsible for any variance from this estimate or actual prices and conditions obtained."

Report format Sorted by 'WBS Lvl 1/Location/WBS Lvl 2/WBS Lvl 3'
'Detail' summary

WBS Lvl 1	Location	WBS Lvl 2	Description	Takeoff Quantity	Labor Amount	Material Amount	Equip Amount	Sub Amount	Indirects & Mark-ups	Grand Total Price	Grand Total Amount
CH2M Corridor			**CH2M Identified Corridor**								
	Jack & Bore										
		Jack & Bore - FP	Jack & Bore @ Flood Plain Crossings	325.00 lf	13,682	146,683	7,504	2,021,500	1,426,777	11,126.60 /lf	3,616,146
		Jack & Bore - Hwy	Jack & Bore @ Highway Crossings	435.00 lf	9,721	103,433	5,609	1,423,700	1,005,235	5,856.78 /lf	2,547,698
			Jack & Bore	760.00 lf	23,403	250,115	13,113	3,445,200	2,432,013	8,110.32 /lf	6,163,844
	Open-Cut & Cover										
		Cathodic Protection	Cathodic Protection	31,859.00 lf	69,375	261,847		30,000	242,659	18.95 /lf	603,881
		Dewatering	Dewatering	0.00	70,544	13,000	31,200		87,314	/ls	202,058
		OH Power	Protect OH Power Lines	2,800.00 lf	8,019	14,000	1,528		16,157	14.18 /lf	39,704
		Open	Open Cut & Cover	31,859.00 lf	2,349,034	8,740,681	1,591,146	332,602	8,852,780	686.34 /lf	21,866,243
		Pavement	Pavement Remove and Replace	1.00 ls	272,141	148,974	219,698	1,827,716	1,662,988	4,131,516.79 /ls	4,131,517
		TS & Seeding	Topsoil & Seeding	2.83 acre	5,318		3,815	7,149	11,679	9,880.20 /acre	27,961
		Welding Inspection	Welding Inspection					96,950	63,131	/ls	160,081
			Open-Cut & Cover	31,859.00 lf	2,774,431	9,178,501	1,847,388	2,294,417	10,936,708	848.47 /lf	27,031,445
			CH2M Corridor CH2M Identified Corridor	**31,859.00 lf**	2,797,834	9,428,616	1,860,501	5,739,617	13,368,721	**1,041.94 /lf**	33,195,290
McKay Rd Corridor			**McKay Road Corridor**								
	Jack & Bore										
		Jack & Bore - FP	Jack & Bore @ Flood Plain Crossings		19,036	204,080	10,441	2,606,000	1,850,600	/lf	4,690,157
		Jack & Bore - Hwy	Jack & Bore @ Highway Crossings	435.00 lf	9,505	100,842	5,586	1,423,700	1,003,385	5,846.02 /lf	2,543,017
			Jack & Bore		28,541	304,922	16,026	4,029,700	2,853,985		7,233,174
	Open-Cut & Cover										
		Cathodic Protection	Cathodic Protection	28,622.00 lf	62,678	236,260		30,000	220,922	19.21 /lf	549,860
		Dewatering	Dewatering							/ls	
		OH Power	Protect OH Power Lines	17,280.00 lf	49,486	86,400	9,430		99,713	14.18 /lf	245,029
		Open	Open Cut & Cover	28,622.00 lf	1,894,638	7,823,361	1,325,892		7,492,488	647.63 /lf	18,536,378
		Pavement	Pavement Remove and Replace	0.00	19,889	57,046	36,854	21,590	93,417	/ls	228,797
		TS & Seeding	Topsoil & Seeding	7.89 acre	14,836		10,643	19,942	32,580	9,886.04 /acre	78,001
		Welding Inspection	Welding Inspection	0.00				58,450	38,061	/ls	96,511
			Open-Cut & Cover		2,041,528	8,203,067	1,382,819	129,982	7,977,181		19,734,577
			McKay Rd Corridor McKay Road Corridor	**28,622.00 lf**	2,070,068	8,507,989	1,398,845	4,159,682	10,831,166	**942.20 /lf**	26,967,751
Minimized			**Minimized Roadway Corridor**								
	Jack & Bore										
		Jack & Bore - FP	Jack & Bore @ Flood Plain Crossings	325.00 lf	13,682	146,683	7,504	2,021,500	1,426,777	11,126.60 /lf	3,616,146
		Jack & Bore - Hwy	Jack & Bore @ Highway Crossings	435.00 lf	9,721	103,433	5,609	1,423,700	1,005,235	5,856.78 /lf	2,547,698
			Jack & Bore		23,403	250,115	13,113	3,445,200	2,432,013		6,163,844
	Open-Cut & Cover										
		Cathodic Protection	Cathodic Protection	31,308.00 lf	67,550	255,509		30,000	237,143	18.85 /lf	590,202
		Dewatering	Dewatering		46,125	8,500	20,400		57,090	/ls	132,115
		OH Power	Protect OH Power Lines	2,798.00 lf	8,013	13,990	1,527		16,146	14.18 /lf	39,675
		Open	Open Cut & Cover	31,308.00 lf	2,420,291	8,612,308	1,618,209	324,116	8,841,495	696.83 /lf	21,816,419
		Pavement	Pavement Remove and Replace	0.00	258,985	163,870	225,171	1,789,744	1,641,340	/ls	4,079,110
		TS & Seeding	Topsoil & Seeding	2.83 acre	5,318		3,815	7,149	11,679	9,880.19 /acre	27,961

WBS Lvl 1	Location	WBS Lvl 2	Description	Takeoff Quantity	Labor Amount	Material Amount	Equip Amount	Sub Amount	Indirects & Mark-ups	Grand Total Price	Grand Total Amount
		Welding Inspection	Welding Inspection	0.00				109,900	71,564	/ls	181,464
			Open-Cut & Cover		2,806,282	9,054,178	1,869,122	2,260,908	10,876,456		26,866,946
			Minimized Minimized Roadway Corridor	**31,308.00 lf**	2,829,685	9,304,293	1,882,235	5,706,108	13,308,469	**1,055.03 /lf**	33,030,790
Modified McKAy			**Modified McKay Road Corridor**								
	Jack & Bore										
		Jack & Bore - FP	Jack & Bore @ Flood Plain Crossings	800.00 lf	19,036	204,080	10,441	2,606,000	1,850,600	5,862.70 /lf	4,690,157
		Jack & Bore - Hwy	Jack & Bore @ Highway Crossings	435.00 lf	9,505	100,842	5,586	1,423,700	1,003,385	5,846.02 /lf	2,543,017
			Jack & Bore		28,541	304,922	16,026	4,029,700	2,853,985		7,233,174
	Open-Cut & Cover										
		Cathodic Protection	Cathodic Protection	29,131.00 lf	63,071	238,373		30,000	222,589	19.02 /lf	554,032
		Dewatering	Dewatering	1.00 ls	124,809	23,000	55,200		154,478	357,487.22 /ls	357,487
		OH Power	Protect OH Power Lines	12,346.00 lf	35,356	61,730	6,737		71,242	14.18 /lf	175,065
		Open	Open Cut & Cover	29,131.00 lf	2,443,907	7,933,942	1,805,367		8,351,254	704.90 /lf	20,534,470
		Pavement	Pavement Remove and Replace	1.00 ls	34,720	97,494	62,742	30,057	155,601	380,613.49 /ls	380,613
		TS & Seeding	Topsoil & Seeding	8.03 acre	15,100		10,832	20,297	33,159	9,886.43 /acre	79,388
		Welding Inspection	Welding Inspection	0.00				65,450	42,619	/ls	108,069
			Open-Cut & Cover		2,716,964	8,354,538	1,940,878	145,803	9,030,942		22,189,126
			Modified McKAy Modified McKay Road Corridor	**29,131.00 lf**	2,745,505	8,659,460	1,956,904	4,175,503	11,884,927	**1,010.00 /lf**	29,422,299
Riverdale Rd			**Riverdale Road Corridor**								
	Jack & Bore										
		Jack & Bore - FP	Jack & Bore @ Flood Plain Crossings	0.00						/lf	
		Jack & Bore - Hwy	Jack & Bore @ Highway Crossings	435.00 lf	9,505	100,842	5,586	1,423,700	1,003,385	5,846.02 /lf	2,543,017
			Jack & Bore		9,505	100,842	5,586	1,423,700	1,003,385		2,543,017
	Open-Cut & Cover										
		Cathodic Protection	Cathodic Protection	25,680.00 lf	56,209	211,898		30,000	200,151	19.40 /lf	498,257
		Dewatering	Dewatering		165,508	30,500	73,200		204,851	/ls	474,059
		OH Power	Protect OH Power Lines	8,379.00 lf	23,996	41,895	4,573		48,350	14.18 /lf	118,814
		Open	Open Cut & Cover	25,680.00 lf	1,801,082	7,126,973	1,254,538		6,919,483	665.97 /lf	17,102,075
		Pavement	Pavement Remove and Replace	0.00	70,633	97,853	72,497	308,697	373,000	/ls	922,680
		TS & Seeding	Topsoil & Seeding	7.08 acre	13,297		9,539	17,874	29,200	9,874.28 /acre	69,910
		Welding Inspection	Welding Inspection	0.00				60,550	39,429	/ls	99,979
			Open-Cut & Cover		2,130,724	7,509,119	1,414,346	417,120	7,814,464		19,285,774
			Riverdale Rd Riverdale Road Corridor	**25,680.00 lf**	2,140,229	7,609,961	1,419,932	1,840,820	8,817,849	**850.03 /lf**	21,828,791

May 01, 2020

PROJECT:	Thornton Reach Phase II, Rev02, Alternative alignments
CLIENT:	City of Thornton, CO
LOCATION:	Thornton, CO USA
CONTRACT NO:	60619101, Task: 1.1.8
ESTIMATE NO:	20-009

SUBMIT DATE: May 01, 2020

BASIS of ESTIMATE

GENERAL:

1. This Opinion of Probable Construction Cost (OPCC) for the above-listed project is prepared to support the Phase II Alternative Alignments Report to be submitted to the client on May 01, 2020.
2. Project Scope General – Evaluate Costs of five (5) Alternative Alignments for the Phase II Scope of Work as defined herein. Furnish & Install approximately 32,000 lf (6.25 miles) of buried 42" diameter Welded Carbon Steel Pipe (WSP) for conveyance of Raw Water from the end of Phase I at E 120th Ave and Quebec St. to the Wes Brown WTP.
3. Format – Assumed contract format is Design-Bid-Build with a single General Construction Contract with the Client for each Phase.
4. AACE Estimate level/Class:
    a. Phase II Alternative alignments is a Class 4 Schematic/Conceptual, Engineer's Cost Estimate based on Conceptual plans.
5. Estimate type:
    a. Phase II – Schematic/Conceptual, <15% design
6. Estimate Accuracy:
    a. Phase II – Low: -15% to -30%, High +20% to +50%
7. AACE Recommended Contingency Range:
    a. Phase II – 30% to 50% (25% Contingency applied to these Alternates)
8. Pricing; - Unit Price, Forced detail w/ vendor quote on pipe
9. Estimate is based on the following documents:
    a. Phase II Alternative Alignment documents prepared by: AECOM, Denver Office dated 04-20-20
    b. Level of Document Development = <15% (Phase II)
    c. Quantity Worksheet
    d. Alternative Alignments plan
    e. Google Earth® Alignments file.

f. Sections 1 thru 15
g. Email clarifications and meeting minutes

10. Scope; Alternative Alignments and lengths:
    a. CH2M-IDENTIFIED TWP CORRIDOR: 31,859 lf
    b. RIVERDALE ROAD CORRIDOR: 25,680 lf
    c. MINIMIZED ROADWAY CORRIDOR: 31,308 lf
    d. MCKAY ROAD – EXISTING PIPELINE CORRIDOR: 28,622 lf
    e. MODIFIED MCKAY ROAD CORRIDOR: 29,131 lf
11. Each Alternative Alignment includes cost considerations for:
    a. Degree of Difficulty / Productivity (lf/crew day)
    b. Conflicts with other utilities
    c. Conflicts with OH Power / Communication Lines
    d. Traffic Control & Protection
    e. Groundwater/ Dewatering of excavations
    f. Surface Restoration Requirements
    g. Jack & Bores
12. Specifically Excluded from this cost comparison are:
    a. Environmental and Permitting issues
    b. Land Use Fees, Purchase/Leasing, ROW's, variances and other "soft costs"
    c. Engineering and Design costs
    d. Inspection and testing, Special Inspections
    e. Police for Traffic Protection
    f. Hazardous or Contaminated materials, groundwater remediation
    g. Geotechnical Engineering, Support or Inspection
    h. Rock Blasting & Removal/Disposal
    i. Potholing, Exploratory Excavation
    j. Costs presented in this estimate should be considered comparative for the purpose of evaluating the different alternatives and not necessarily definitive.
13. Schedule:
    i. Bid/Award - 12/2020 – 01/2021
    ii. Commence Construction – Spring 2021
    iii. Mid-Point Construction - 12/2021
    iv. Completion - 12/2022
14. Executive Summary:

	Length	Cost	Duration*
a. CH2M-IDENTIFIED TWP CORRIDOR:	31,859 lf	$33.2M	277
b. RIVERDALE ROAD CORRIDOR:	25,680 lf	$21.8M	173
c. MINIMIZED ROADWAY CORRIDOR:	31,308 lf	$33.0M	314
d. MCKAY ROAD PIPELINE CORRIDOR:	28,622 lf	$27.0M	167
e. MODIFIED MCKAY ROAD CORRIDOR:	29,131 lf	$29.4M	187

15. Risk/Opportunity Factors;
    a. Since the original submittal (Rev01) in January 2020, some additional Risk Items have identified, primarily; impacts due to the coronavirus pandemic and associated schedule, construction material, labor, subcontract and equipment cost impacts. An additional 1.5% of COW has been added to the Contingency to account for these risks.
        i. Labor quality and availability
        ii. Increased HSE costs due to CDC requirements, PPE
        iii. Schedule delays and impacts
        iv. Material escalation, inflation, and availability
        v. Subcontractor availability
        vi. Equipment escalation, availability
        vii. Overall risk, delay and escalation/inflation
    b. Technical Challenges Map Phase 2:
        i. Riverdale Road Corridor
            1. Permitting
            2. Existing Irrigation Ditches
            3. Drainage Crossings
        ii. Minimized Roadway Corridor:
            1. Existing Parks
            2. Congested Corridor
16. Contingency recommendations;
    a. Construction Contingency – 25%
    b. Owner's Contingency (Not included) for additional scope, Owner driven changes – 5-10%

17. Estimate includes:
    a. Provide all Labor, Material, Equipment and things required to Furnish and Install the scope of work as defined herein.
    b. Includes CSI MasterFormat Specification Divisions:
        i. 01 – General Requirements
        ii. 02 – Existing Conditions
        iii. 31 – Earthwork
        iv. 32 – Site Improvements
        v. 33 – Site Utilities
    c. Furnish and Install approx. 6.25 miles (32,000lf) of 42" diameter AWWA C200 cement mortar lined, polyurethane coated Carbon Steel Welded Pipe for Raw Water conveyance to WTP's per alignments provided. Assumed pipe material per quote from

Neal Kelemen of Northwest Pipe Company: AWWA C200, cement mortar lined per AWWA C205 and polyurethane coated per AWWA C222. Pipe cylinder wall is 0.233 inch with a design working pressure of 225 psi per AWWA M-11 assuming 42,000 psi yield steel. Pipe is furnished in 50-foot nominal lay lengths with bell and spigot ends for O-ring gasket or field lap weld joints. A nominal allowance for customary in-line fittings is assumed. Delivery to the Front Range of Colorado is included.

d. Some is rural, sub-urban and urban environments with varying degrees of difficulty and surface restoration required. Average installation/productivity rates assumed for entire length.
e. Erosion & Sediment Control (included in General Conditions mark-up of 8% on COW)
f. Average Cover depth is assumed at 6'.
g. Average Excavation depth of 10' is assumed.
h. Trench Boxes assumed for excavation support and protection
i. No rock assumed
j. An Allowance for Local Dewatering of trenches is included on three (3) of the Alignment Alternatives
k. No bypass pumping or piping assumed
l. No Stream restoration assumed, Jack & Bore under Flood Plains
m. Pipe Bedding included consists of one (1) 6" of compacted crushed stone and one (1) 6" layer of ½" Processed Stone below invert.
n. Pipe zone backfill included consists of ½" Processed Stone to 12" above top of pipe.
o. CLSM Cut-offs are assumed at 1600lf Center-center.
p. Backfill to grade with excavated material.
q. An allowance for surface restoration (topsoil or seeding) is included.
r. Pipe installed at varied rates of production of 50 to 200lf per crew day with four welds (50lf pipe lengths).
s. Includes removal and replacement of asphalt paving where pipeline crosses or runs in a roadway.
t. Includes concrete curb, gutter and sidewalk removal and replacement where pipeline crosses a roadway.
u. Most of the pipeline will be installed using the open-cut & cover method, trench will be approx. 8' wide x 10' deep.
v. Phase II Alternative Include the following Jack & Bores at Flood Plain and State Highway Crossings; See quantity worksheet for locations and lengths of Jack & Bores.
w. Seven (7) or (8) CARV and Blow-off Vaults are included for high points in the pipeline alignments.
x. Isolation Valves are not included in the Alternative Alignment cost estimates.
y. Includes budget for Cathodic Protection based on a budget per 1,000 lf of 42" pipeline from our historic database.

z. Includes allowance for Third-party Independent Inspection of field welds. 100% Visual Inspection and 10% Particle inspection.
aa. A budget/allowance has been included for Utility conflicts.
bb. All Contractor Furnished materials, equipment
cc. No Owner-furnished materials, equipment assumed
dd. No proprietary materials, processes or equipment, sole-source or limited response items included in the estimate.
ee. No salvaged materials or equipment for reuse or refurbishment.
ff. No salvaged materials or equipment to be turned over to the client.
gg. Work locations are multiple and as shown on the alignment drawings and Google Earth® images provided.
hh. No Special Conditions or Client requirements considered
ii. Mark-ups on the Totals Page include; General Requirements, Temporary Facilities & Controls to be provided and responsibility of the General Contractor are as detailed on the estimate totals page and include:
    i. Labor adjustment of 10% for a 50-hour workweek
    ii. Contractor Mobilization/demobilization
    iii. Sales Tax of 9% on Construction Equipment included
    iv. Small Tools, Consumables and safety supplies
    v. Subcontractor OH&P – included in COW line items
    vi. Subcontractor Bonds
    vii. Escalation to mid-point of construction (12/2021) is included at a rate of 3% per year for a total of 4.5%.
    viii. Contractors General Conditions of 8% of COW
    ix. Contingency of 25% on COW
    x. GC OH&P of 10% on COW
    xi. Permits
    xii. Insurances including Builder's Risk Insurance
    xiii. Project Labor and Material Performance and Payment Bonds
jj. Insurances – No Special Insurances, Flood, or special requirements included
kk. OCIP/CCIP – No Owner-controlled or Contractor-controlled Insurance Programs considered.
ll. Wage rates – AECOM standard wage rate assumed ie: Client to advise of any special or project-specific wages: Davis-Bacon 2020.
mm. PLA - No Project Labor Agreement applicable
nn. Labor considerations – No special labor considerations, quality, productivity, availability, shortages, imported labor, remote jobsites, etc. taken into consideration.
oo. Market conditions – Local labor, material and subcontract market condition considered.
pp. Location factors – Location factors applied and considered.

qq. Assumed availability of Utilities/Services to support Construction Activities. Provided by Client
rr. Pricing – Database/ Historic pricing used, one quote on pipe material.
ss. No Design & Engineering or other Professional Services included.
tt. No Engineering Support during Construction included.
uu. No Power, Communications/Data Infrastructure provided.
vv. No Security costs included
ww. Security Services during construction excluded including police traffic control i
xx. No special Safety training, special project or facility safety training, PPE, confined space, OSHA training, hazards, plans, processes or procedures included.
yy. Weather - No special weather/temperature/protection requirements to consider.
zz. No Hot/Cold Weather work: any temporary enclosures, protection, heat, cooling, procedures included/excluded, consider location and schedule.
aaa. Permitting – allowance included
bbb. No provisions included for land leasing or right-of-way issues.
ccc. Start-up Chemicals - NA
ddd. Commissioning: All new pipelines to be cleaned and disinfected and pressure tested.
eee. All other Material Testing, concrete, soils, compaction etc. by others
fff. All Hazardous/Contaminated materials - Investigations, Reports, Testing, abatement, removal, encapsulation, disposal excluded.
ggg. Seismic requirements not considered
hhh. Geotechnical Requirements not considered
iii. Rock removal, Blasting excluded
jjj. Special Excavation Support & Protection excluded
kkk. Underpinning/Protection of Existing Structures excluded
lll. Exploratory Excavation excluded
mmm. Existing Utilities – some allowance provisions included.
nnn. Utility Location - excluded
ooo. Utility Protection, Removal, replacement, relocation – some provisions included.
ppp. Vibration Control or monitoring excluded
qqq. Settlement Control or monitoring excluded
rrr. Noise Control or monitoring excluded
sss. SWPPP/Erosion Control & Storm/Ground Water Protection – included in General Conditions mark-up of 8% on COW.
ttt. Environmental Protection – not addressed
uuu. Dust Control – Not addressed
vvv. Air pollution Protections – Not addressed
www. Bypass Pumping or Piping - excluded

xxx. Schedule Phasing not considered
yyy. Down time not considered
zzz. Work Hours, Standard 8-hour, 5-day, 40-hour workweek with standard Holiday schedule assumed. No Overtime, Shift work, Premium Time, Holiday work included.
aaaa. Access to Work restrictions – none assumed.
bbbb. Special Access requirements – not anticipated
cccc. Occupied/On-going Operations/facilities – not considered
dddd. Coordination with other trades or contracts - not considered
eeee. Liquidated Damages - not considered

18. Clarifications;
    a. <list any special clarifications, assumptions made that were unclear by the information provided>
19. Allowances;
    a. Quantity Allowances
        i. Cathodic Protection
        ii. CLSM Cut-offs @ 1600lf OC
        iii. Utility Interferences & Conflicts
        iv. Traffic Control & Protection
        v. OH Powerline protection
        vi. Dewatering
        vii. Surface Restoration (topsoil & seeding)
        viii. Welding Inspection
        ix. Isolation Valves
        x. Blow-off Assemblies
        xi. CARV Valves
    b. Lump Sum Allowances
    c. Unit Allowances
20. Estimate Disclaimer:

"The enclosed Engineer's Estimate is only an estimate of possible construction costs for budgeting purposes. This estimate is limited to the conditions existing at its issuance and is not a guaranty of actual price or cost. Uncertain market conditions such as, but not limited to: local labor or contractor availability, wages, other work, material market fluctuations, price escalations, force majeure events, and developing bidding conditions etc. may affect the accuracy of this estimate. AECOM is not responsible for any variance from this estimate or actual prices and conditions obtained."

Submitted by,

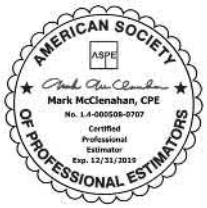

Mark McClenahan, C.P.E.
Senior Estimating Manager, Water, NA
AECOM Technical Services, Inc.

Enclosures/Attachments:
Quantity Spreadsheet
AECOM/AACE Estimate Classification Guidelines

Cc; Martin Hammer, Chief Estimator, AECOM

Phase II Alignment Study
Supplemental Figures for McKay Road Alignment
September 2020

THORNTON WATER PROJECT - SEGMENT A - PHASE II - PREFERRED ALIGNMENT (PRELIMINARY) - SEP 2020

Last saved by: WARRENC1(2020-09-20) Last Plotted: 2020-09-22
Filename: C:\PWWORKING\AECOM_DS20_NA_2019\CHAD.WARREN@AECOM.COM\D0113279\PHASE 2 - PROPERTIES LIST - MCKAY ROAD EXIST.DWG

Project Management Initials: Designer: CMW Checked:_____ Approved:_____ ANSI B 11" x 17"

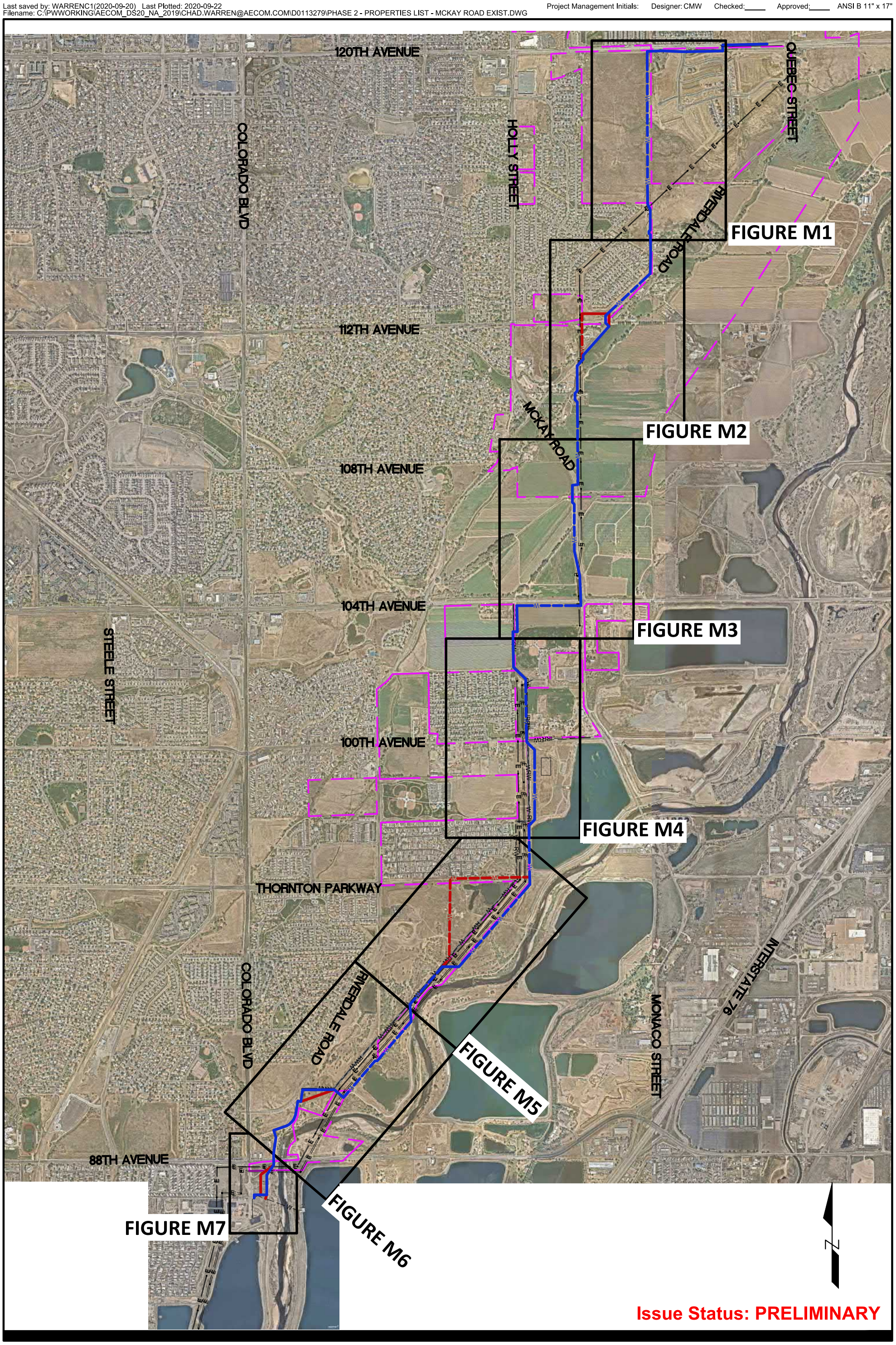

Issue Status: PRELIMINARY

THORNTON REACH
CITY OF THORNTON
Project No.: 12-777H5 / 60619101
Date: 22 SEP 2020

CITY OF THORNTON
SEGMENT A PHASE II
42" DIAMETER PIPELINE

LEGEND
- PROPOSED WATER PIPELINE
- ALTERNATE WATER PIPELINE
- THORNTON/ADAMS COUNTY BOUNDARY LINE

AECOM

KEY MAP

THORNTON WATER PROJECT - SEGMENT A - PHASE II - PREFERRED ALIGNMENT (PRELIMINARY) - SEP 2020

Last saved by: WARRENC1(2020-09-20) Last Plotted: 2020-09-22
Filename: C:\PWWORKING\AECOM_DS20_NA_2019\CHAD.WARREN@AECOM.COM\D0113279\PHASE 2 - PROPERTIES LIST - MCKAY ROAD EXIST.DWG

Project Management Initials: Designer: CMW Checked:_____ Approved:_____ ANSI B 11" x 17"

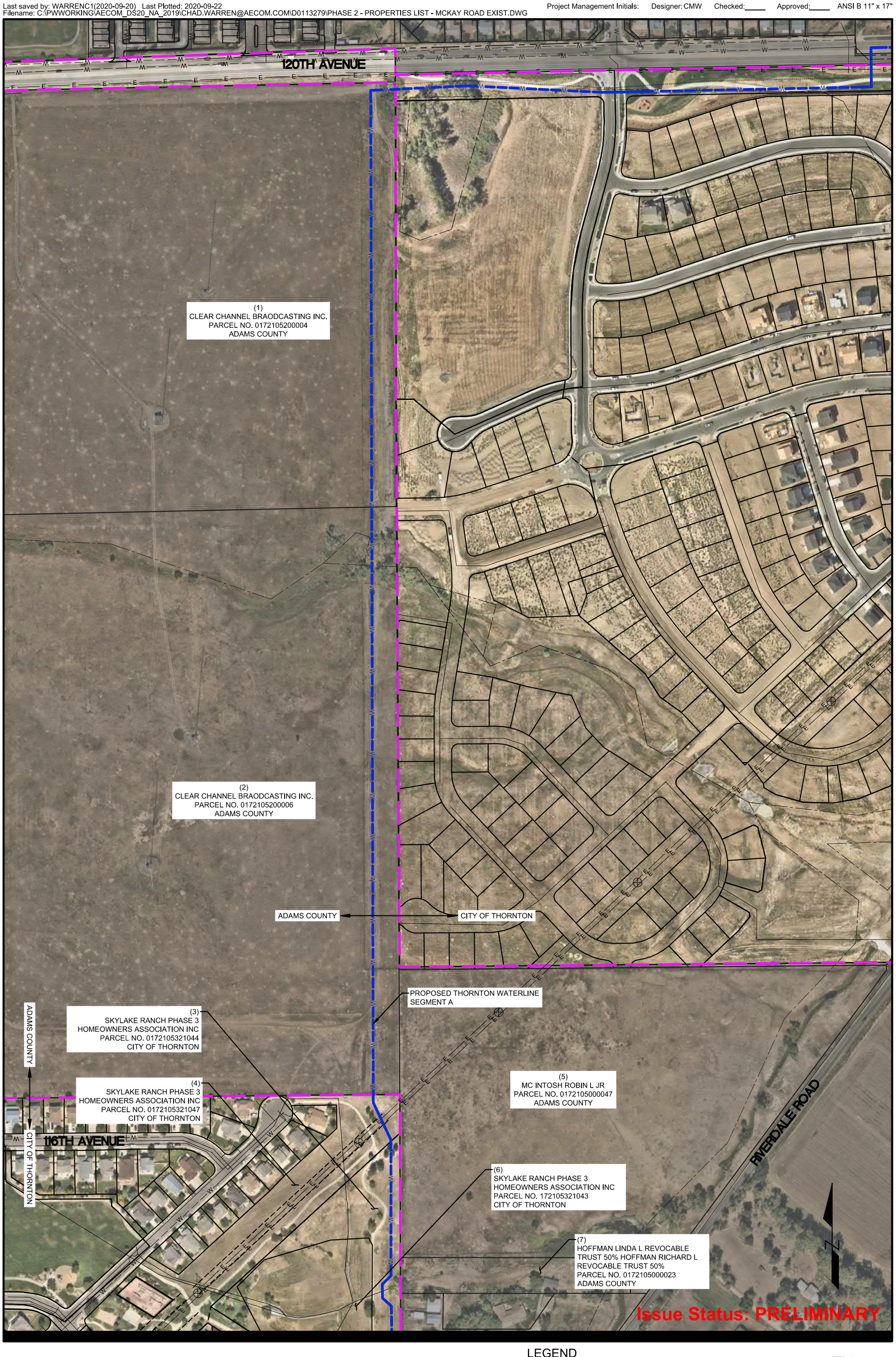

THORNTON REACH
CITY OF THORNTON
Project No.: 12-777H5 / 60619101
Date: 22 SEP 2020

CITY OF THORNTON
SEGMENT A PHASE II
42" DIAMETER PIPELINE

LEGEND
- PROPOSED WATER PIPELINE
- ALTERNATE WATER PIPELINE
- THORNTON/ADAMS COUNTY BOUNDARY LINE

AECOM

Figure: M1

THORNTON WATER PROJECT - SEGMENT A - PHASE II - PREFERRED ALIGNMENT (PRELIMINARY) - SEP 2020

Last saved by: WARRENC1(2020-09-20) Last Plotted: 2020-09-22
Filename: C:\PWWORKING\AECOM_DS20_NA_2019\CHAD.WARREN@AECOM.COM\D0113279\PHASE 2 - PROPERTIES LIST - MCKAY ROAD EXIST.DWG

Project Management Initials: Designer: CMW Checked:_____ Approved:_____ ANSI B 11" x 17"

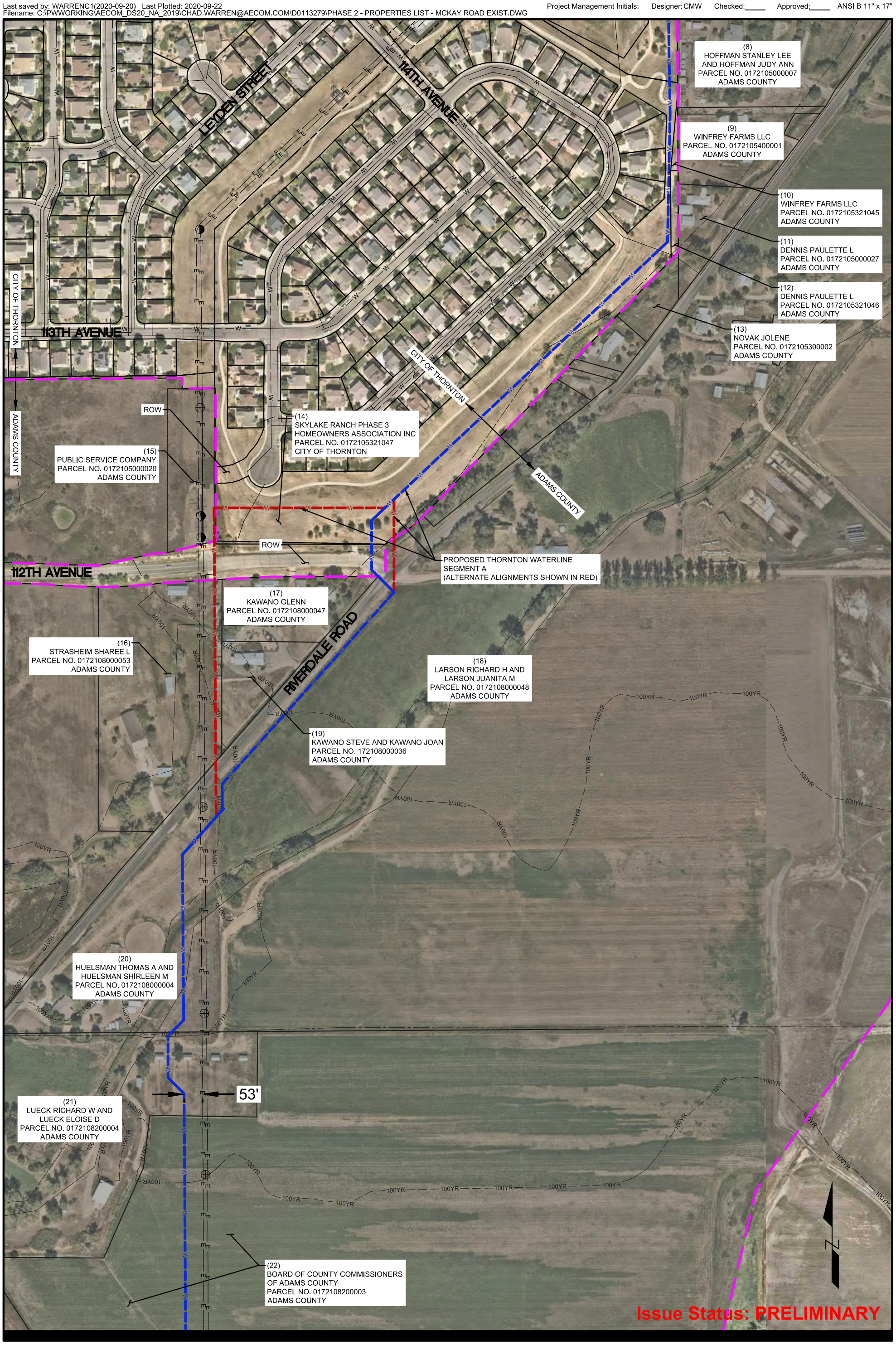

THORNTON REACH
CITY OF THORNTON
Project No.: 12-777H5 / 60619101
Date: 22 SEP 2020

CITY OF THORNTON
SEGMENT A PHASE II
42" DIAMETER PIPELINE

LEGEND
- PROPOSED WATER PIPELINE
- ALTERNATE WATER PIPELINE
- THORNTON/ADAMS COUNTY BOUNDARY LINE

AECOM

Figure: M2

THORNTON WATER PROJECT - SEGMENT A - PHASE II - PREFERRED ALIGNMENT (PRELIMINARY) - SEP 2020

Last saved by: WARRENC1(2020-09-20) Last Plotted: 2020-09-22
Filename: C:\PWWORKING\AECOM_DS20_NA_2019\CHAD.WARREN@AECOM.COM\D0113279\PHASE 2 - PROPERTIES LIST - MCKAY ROAD EXIST.DWG

Project Management Initials: Designer: CMW Checked:_____ Approved:_____ ANSI B 11" x 17"

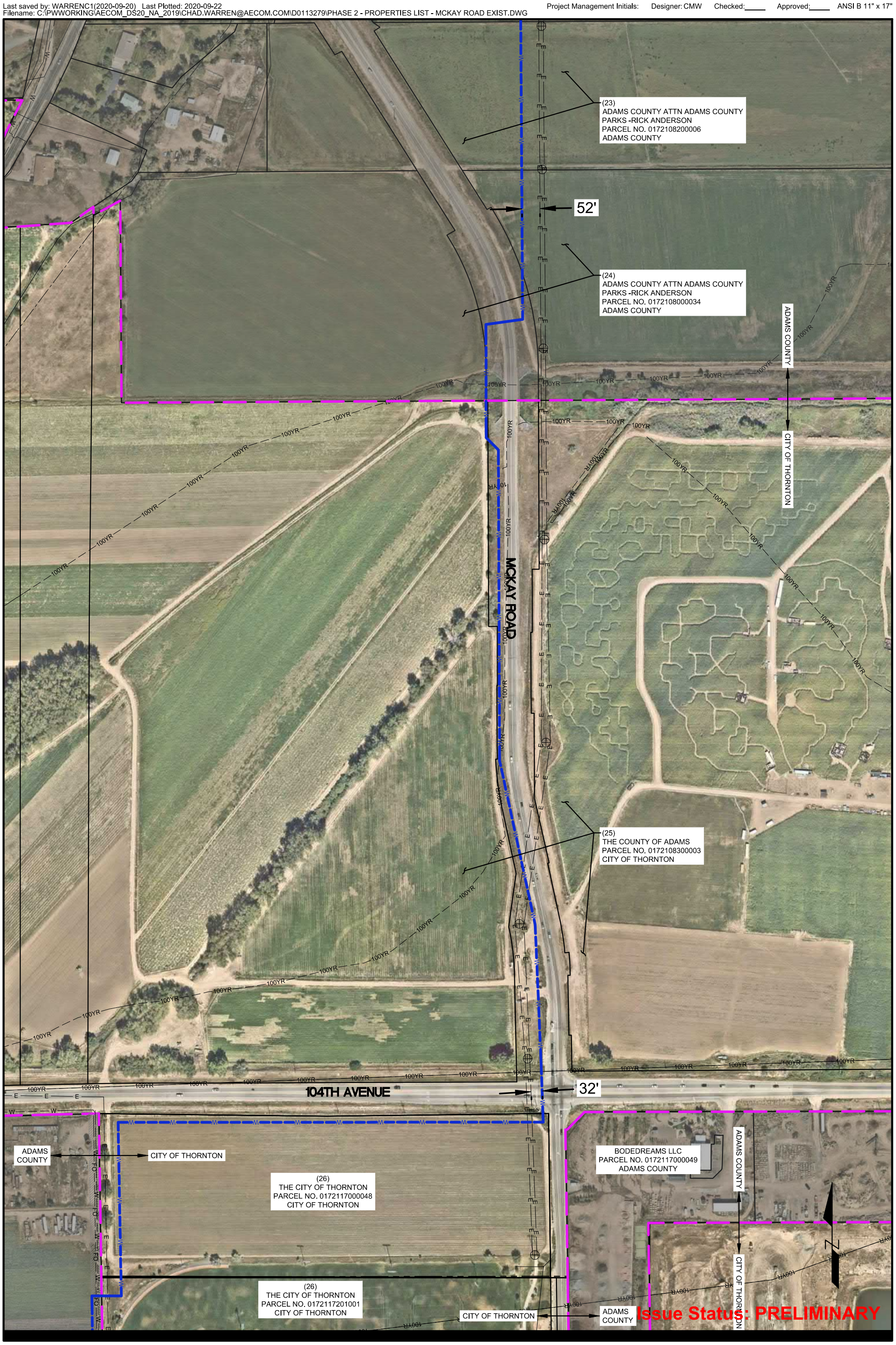

THORNTON REACH
CITY OF THORNTON
Project No.: 12-777H5 / 60619101
Date: 22 SEP 2020

CITY OF THORNTON
SEGMENT A PHASE II
42" DIAMETER PIPELINE

LEGEND
- PROPOSED WATER PIPELINE
- ALTERNATE WATER PIPELINE
- THORNTON/ADAMS COUNTY BOUNDARY LINE

AECOM

Figure: M3

THORNTON WATER PROJECT - SEGMENT A - PHASE II - PREFERRED ALIGNMENT (PRELIMINARY) - SEP 2020

Last saved by: WARRENC1(2020-09-20) Last Plotted: 2020-09-22
Filename: C:\PWWORKING\AECOM_DS20_NA_2019\CHAD.WARREN@AECOM.COM\D0113279\PHASE 2 - PROPERTIES LIST - MCKAY ROAD EXIST.DWG

Project Management Initials: Designer: CMW Checked:_____ Approved:_____ ANSI B 11" x 17"

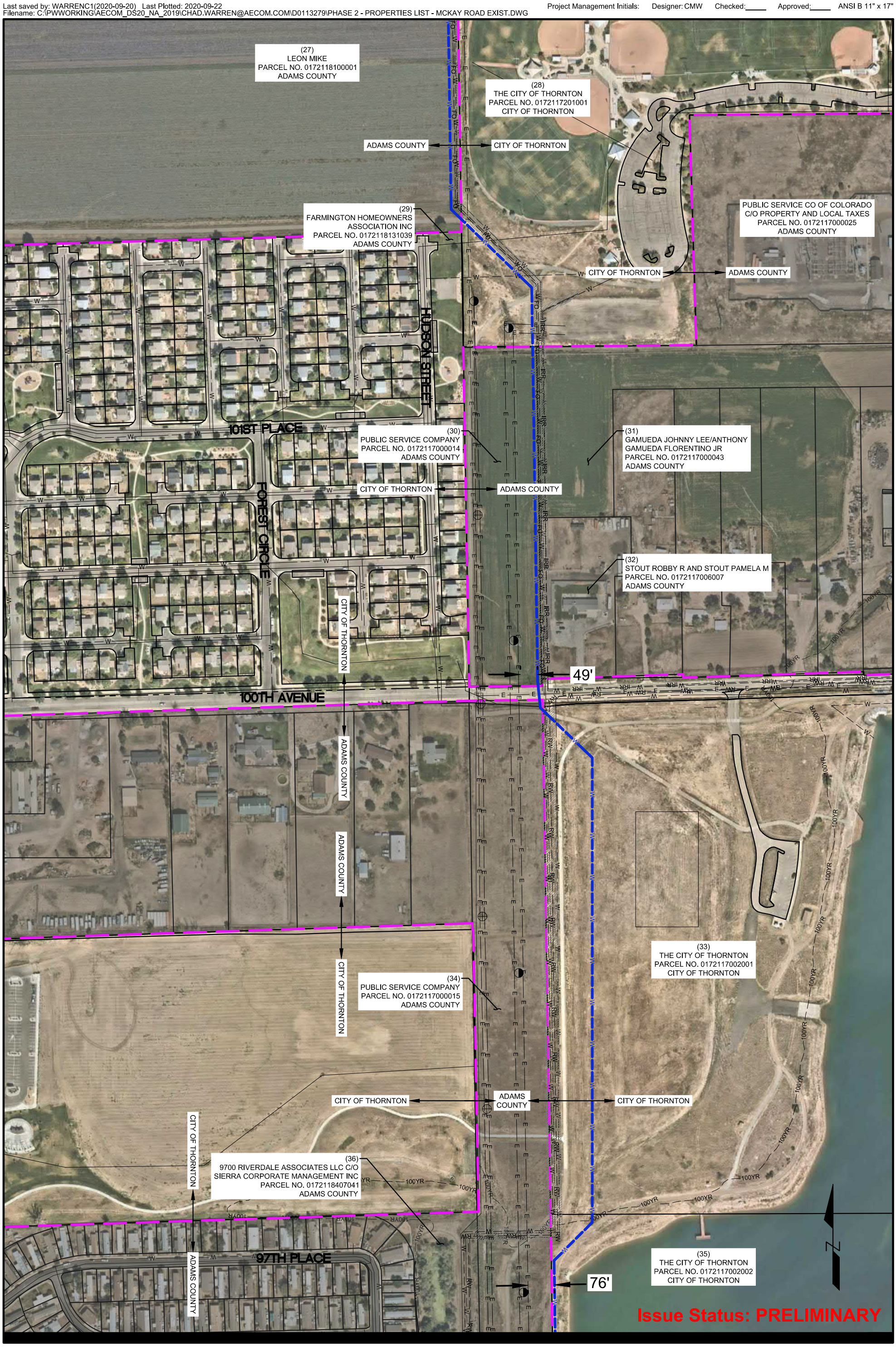

THORNTON REACH
CITY OF THORNTON
Project No.: 12-777H5 / 60619101
Date: 22 SEP 2020

CITY OF THORNTON
SEGMENT A PHASE II
42" DIAMETER PIPELINE

LEGEND
- PROPOSED WATER PIPELINE
- ALTERNATE WATER PIPELINE
- THORNTON/ADAMS COUNTY BOUNDARY LINE

AECOM

Figure: M4

THORNTON WATER PROJECT - SEGMENT A - PHASE II - PREFERRED ALIGNMENT (PRELIMINARY) - SEP 2020

Last saved by: WARRENC1(2020-09-20) Last Plotted: 2020-09-22
Filename: C:\PWWORKING\AECOM_DS20_NA_2019\CHAD.WARREN@AECOM.COM\D0113279\PHASE 2 - PROPERTIES LIST - MCKAY ROAD EXIST.DWG

Project Management Initials: Designer: CMW Checked:_____ Approved:_____ ANSI B 11" x 17"

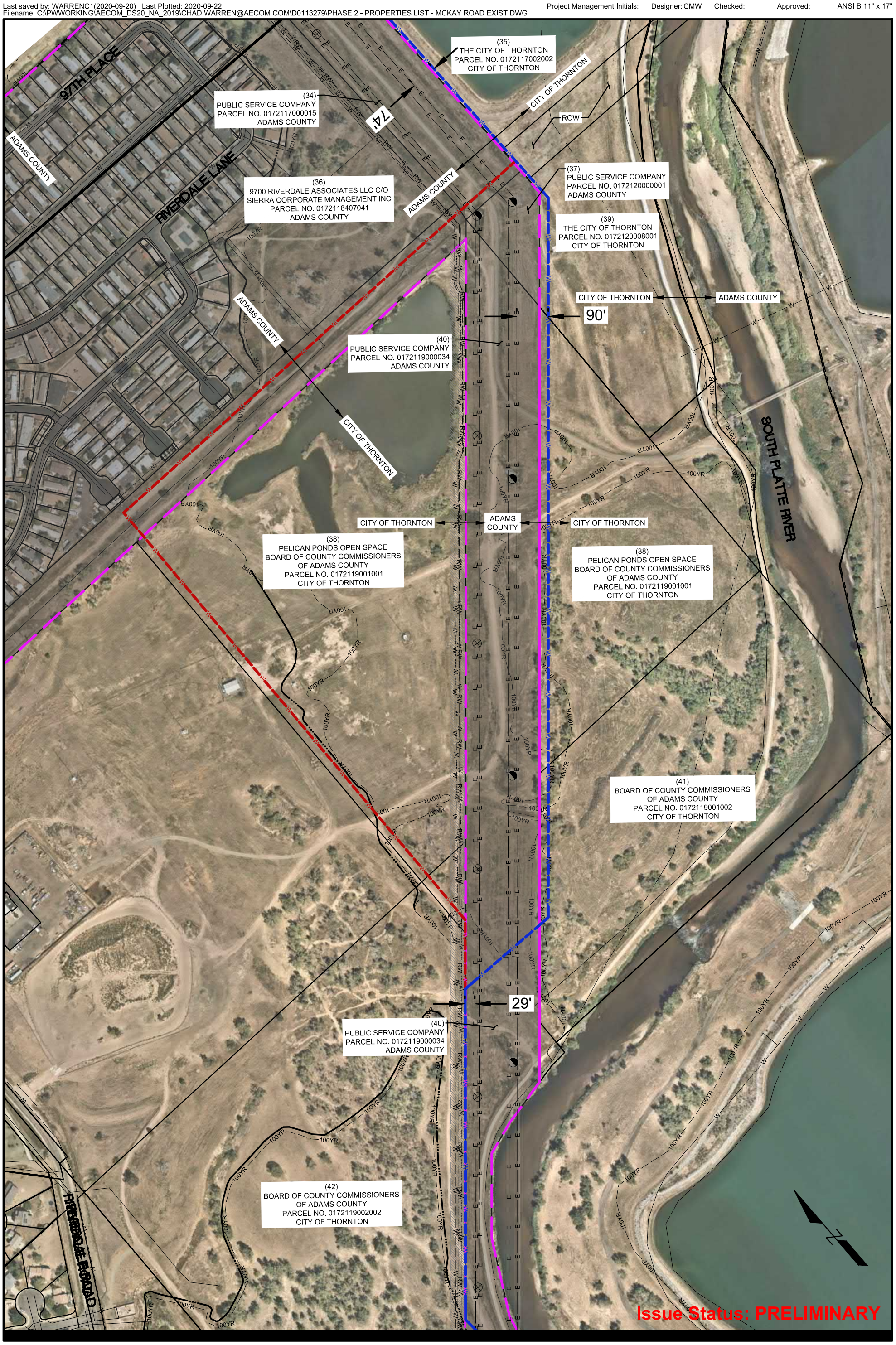

THORNTON REACH
CITY OF THORNTON
Project No.: 12-777H5 / 60619101
Date: 22 SEP 2020

CITY OF THORNTON
SEGMENT A PHASE II
42" DIAMETER PIPELINE

LEGEND
- PROPOSED WATER PIPELINE
- ALTERNATE WATER PIPELINE
- THORNTON/ADAMS COUNTY BOUNDARY LINE

AECOM

Figure: M5

THORNTON WATER PROJECT - SEGMENT A - PHASE II - PREFERRED ALIGNMENT (PRELIMINARY) - SEP 2020

Last saved by: WARRENC1(2020-09-20) Last Plotted: 2020-09-22
Filename: C:\PWWORKING\AECOM_DS20_NA_2019\CHAD.WARREN@AECOM.COM\D0113279\PHASE 2 - PROPERTIES LIST - MCKAY ROAD EXIST.DWG

Project Management Initials: Designer: CMW Checked:_____ Approved:_____ ANSI B 11" x 17"

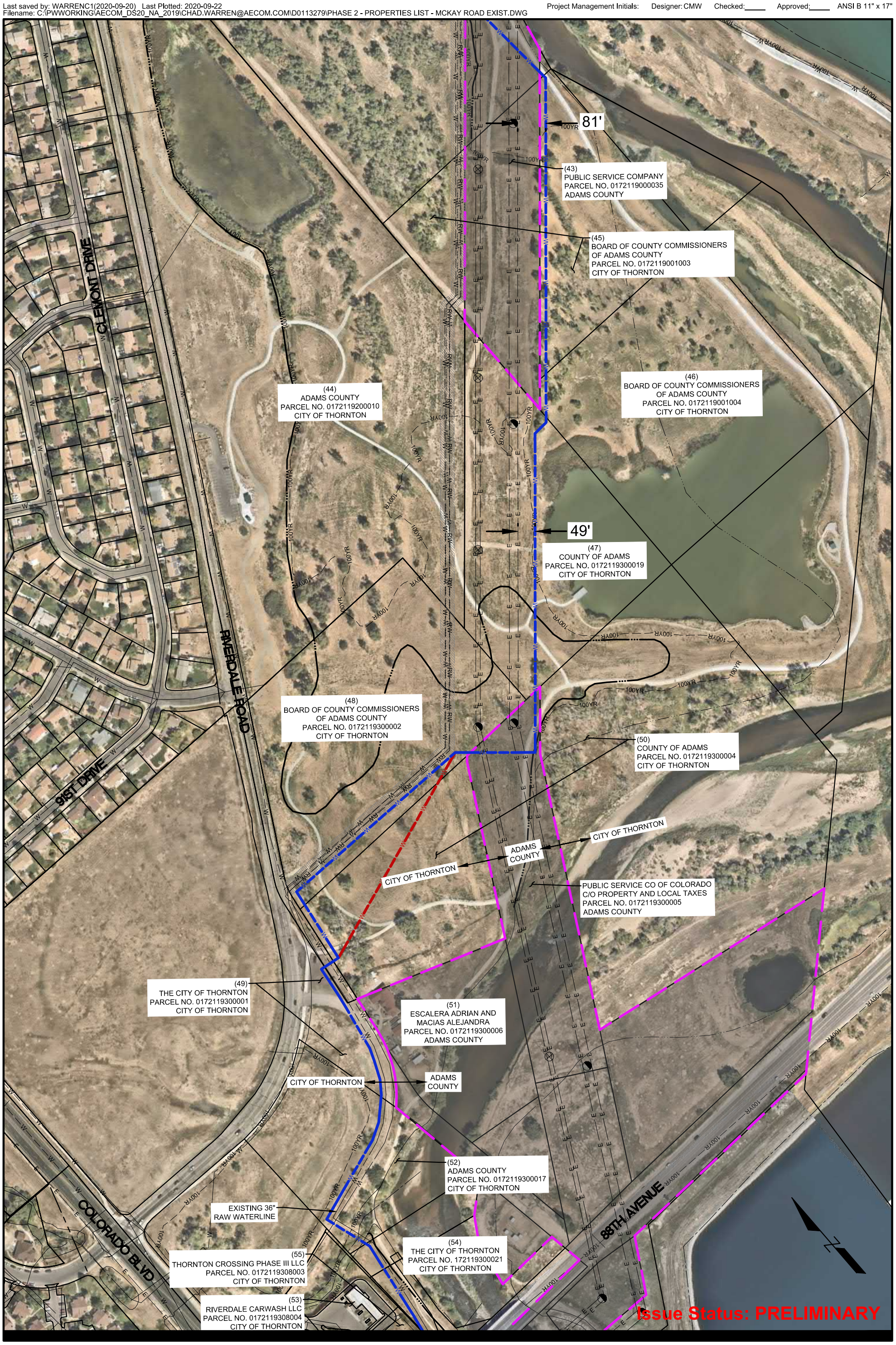

THORNTON REACH
CITY OF THORNTON
Project No.: 12-777H5 / 60619101
Date: 22 SEP 2020

CITY OF THORNTON
SEGMENT A PHASE II
42" DIAMETER PIPELINE

LEGEND
- PROPOSED WATER PIPELINE
- ALTERNATE WATER PIPELINE
- THORNTON/ADAMS COUNTY BOUNDARY LINE

AECOM

Figure: M6

THORNTON WATER PROJECT - SEGMENT A - PHASE II - PREFERRED ALIGNMENT (PRELIMINARY) - SEP 2020

Last saved by: WARRENC1(2020-09-20) Last Plotted: 2020-09-22
Filename: C:\PWWORKING\AECOM_DS20_NA_2019\CHAD.WARREN@AECOM.COM\D0113279\PHASE 2 - PROPERTIES LIST - MCKAY ROAD EXIST.DWG

Project Management Initials: Designer: CMW Checked:_____ Approved:_____ ANSI B 11" x 17"

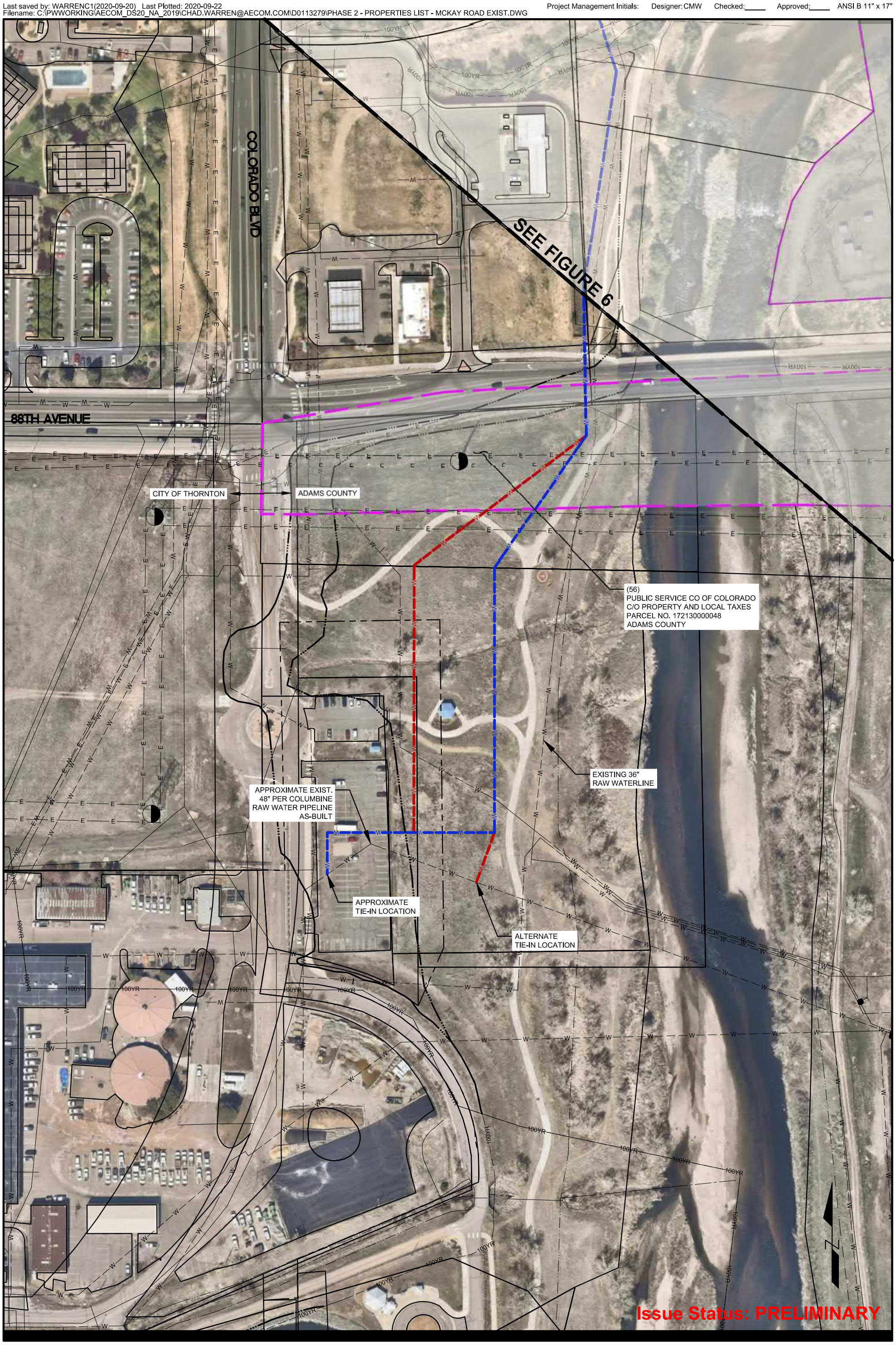

THORNTON REACH
CITY OF THORNTON
Project No.: 12-777H5 / 60619101
Date: 22 SEP 2020

CITY OF THORNTON
SEGMENT A PHASE II
42" DIAMETER PIPELINE

LEGEND
- PROPOSED WATER PIPELINE
- ALTERNATE WATER PIPELINE
- THORNTON/ADAMS COUNTY BOUNDARY LINE

AECOM

Figure: M7

Appendix E – Current Project Plans

THORNTON WATER PROJECT SEGMENT A PHASE I PIPELINE

PROJECT NO. 12-777H5

AECOM PROJECT NO. 60619101

CITY OF THORNTON
12450 WASHINGTON ST
THORNTON, CO 80241
T 720.977.6700 F 000.000.0000
WWW.THORNTONWATERPROJECT.COM

AECOM
7595 TECHNOLOGY WAY, STE 200
DENVER, CO 80237
T 303.694.2770 F 303.694.3946
WWW.AECOM.COM

LITHOS ENGINEERING
2750 S WADSWORTH BLVD, STE D-200
DENVER, CO 80227
T 303.625.9502

AZTEC ENGINEERING
1515 WYNKOOP ST, STE 360
DENVER, CO 80202
T 720.728.4176

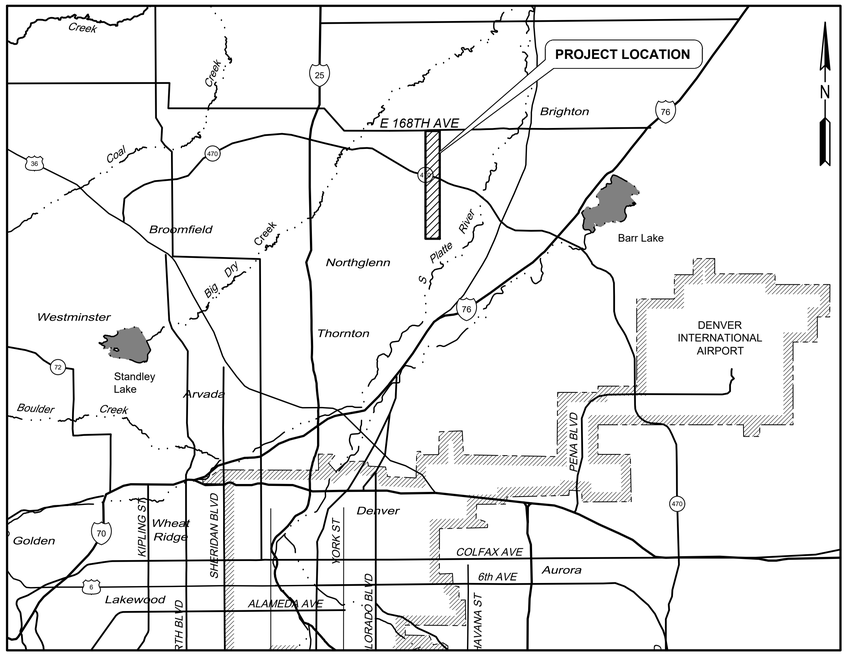

Vicinity Map
NTS

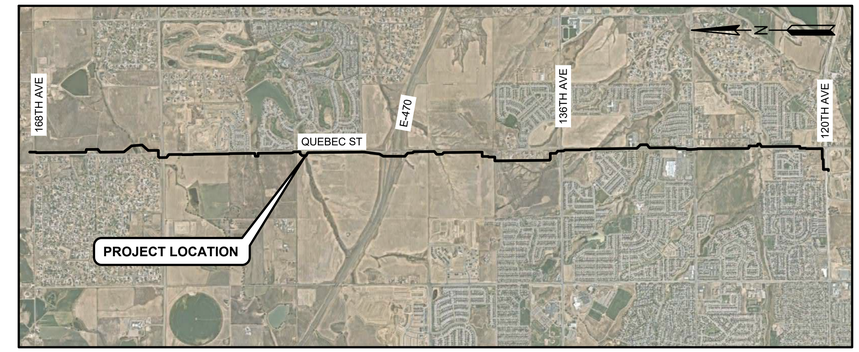

Location Map
NTS

Issue: PRE-FINAL SUBMITTAL

Issue Date: October 15, 2021

INTERIM REVIEW ONLY
Not to be used for construction, bidding, permit or regulatory approval purposes.This document is released for the purpose of interim review under the authority of:
BILL WEMMERT
Registered Professional Engineer
XXXXX
Registration Number
04/27/2021
Date

AECOM Project Team

Project Manager. . . . . BILL WEMMERT, P.E.
Project Director . . . . . NATHAN WALKER
Design Lead. . . . . CURTIS THOMPSON, P.E.

Thornton Project Team

Project Director . . . . . MARK KOLEBER
Project Engineer . . . . . JOHN HIMYAK, P.E.
Project Manager. . . . . EDUARDO MORENO
Contract Administrator . . DENNIS LAURITA
Contract Administrator . . PATRICK HINTERBERGER
Owners Advisor. . . . . TONY STOUT, P.E.
Owners Advisor. . . . . CHARLIE ROBINSON
Owners Advisor. . . . . GERALD SIMPSON

PROJECT DIRECTOR - MARK KOLEBER DATE

PROJECT ENGINEER - JOHN HIMYAK, P.E. DATE

PROJECT MANAGER - EDUARDO MORENO DATE

OWNERS ADVISOR - TONY STOUT, P.E. DATE

ISSUE/REVISION

I/R	DATE	DESCRIPTION
D	10/14/2021	PRE-FINAL SUBMITTAL
C	04/27/2021	75% SUBMITTAL
B	09/25/2020	35% FINAL SUBMITTAL
A	07/20/2020	35% SUBMITTAL

SHEET NUMBER
G000 1 OF 216

SHEET INDEX

GENERAL

DEMOLITION AND RESTORATION

CIVIL

CIVIL

INSTRUMENTATION AND MONITORING

TRAFFIC CONTROL

SEDIMENT AND EROSION CONTROL DRAWINGS

SEDIMENT AND EROSION CONTROL DRAWINGS

SUBSURFACE UTILITY INVESTIGATION

INDICATES SHEETS NOT INCLUDED IN THE 90% SUBMITTAL

AECOM

Thornton WATER PROJECT

TWP SEG A, PHASE 1
PROJECT No. 12-777H5

CLIENT

CITY OF THORNTON
12450 WASHINGTON ST,
THORNTON, CO 80241
720.977.6700 tel 000.000.0000 fax
www.thorntonwaterproject.com

CONSULTANT

AECOM
7595 TECHNOLOGY WAY, STE 200
DENVER, CO 80237
T 303.694.2770 F 303.694.3946
www.aecom.com

ISSUE/REVISION

I/R	DATE	DESCRIPTION
E	10/15/2021	PRE-FINAL SUBMITTAL
C	04/27/2021	75% SUBMITTAL
B	09/25/2020	35% FINAL SUBMITTAL
A	04/21/2020	35% SUBMITTAL

VERIFIED SCALES

BAR IS ONE INCH ON ORIGINAL DRAWING
0 1"
IF NOT ONE INCH ON THIS SHEET, ADJUST SCALES ACCORDINGLY

DRAWN BY:	SEM/JEC
CHKD BY:	MG
CHKD BY:	CAT
APPD BY:	WEW

PROJECT NUMBER

60619101

SHEET TITLE

SHEET INDEX

SHEET NUMBER

G001

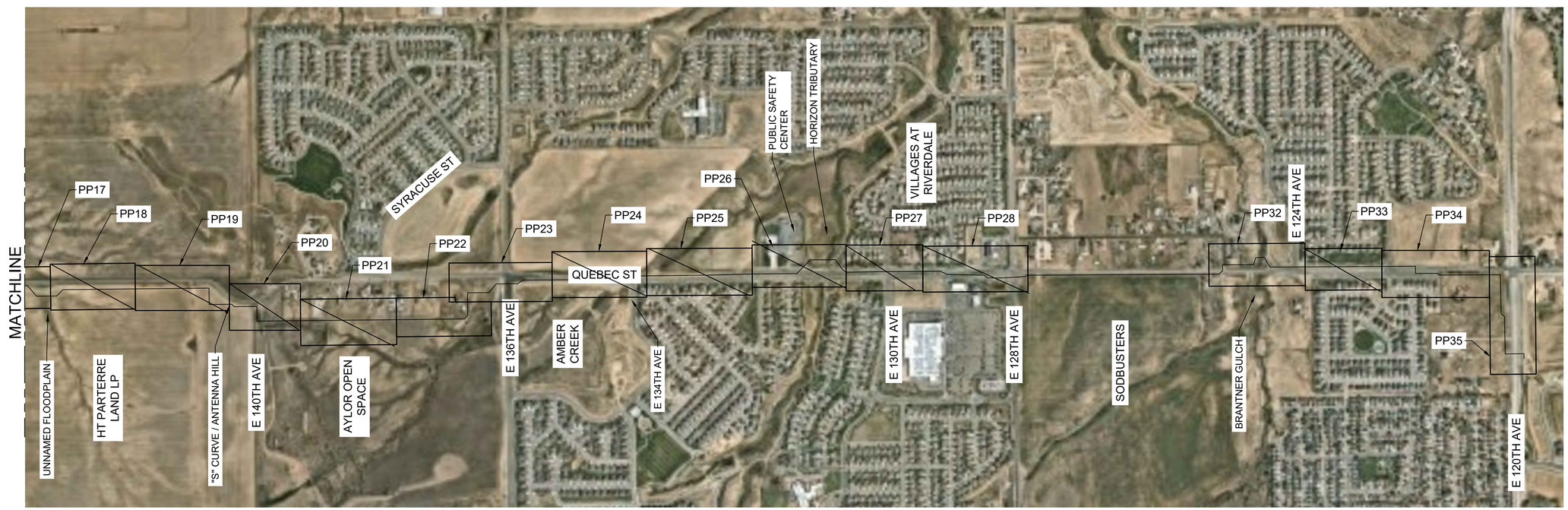

KEY MAP

AECOM

Thornton WATER PROJECT

TWP SEG A, PHASE 1
PROJECT No. 12-777H5

CLIENT

CITY OF THORNTON
12450 WASHINGTON ST,
THORNTON, CO 80241
720.977.6700 tel 000.000.0000 fax
www.thorntonwaterproject.com

CONSULTANT

AECOM
7595 TECHNOLOGY WAY, STE 200
DENVER, CO 80237
T 303.694.2770 F 303.694.3946
www.aecom.com

ISSUE/REVISION

I/R	DATE	DESCRIPTION
E	10/15/2021	PRE-FINAL SUBMITTAL
C	04/27/2021	75% SUBMITTAL
B	09/25/2020	35% FINAL SUBMITTAL
A	04/21/2020	35% SUBMITTAL

VERIFIED SCALES

0 1250 2500
SCALE:1"=1250'

BAR IS ONE INCH ON ORIGINAL DRAWING
0 1"
IF NOT ONE INCH ON THIS SHEET, ADJUST SCALES ACCORDINGLY

DRAWN BY:	SEM/JEC
CHKD BY:	MG
CHKD BY:	CAT
APPD BY:	WEW

PROJECT NUMBER

60619101

SHEET TITLE

KEY MAP

SHEET NUMBER

G002 3 OF 216

C:\pwworking\aecom_ds20_na_2019\stephen.muller@aecom.com\d0105068\G-01-SHT-INDX.dwg

ABBREVIATIONS:

ADCO	ADAMS COUNTY
AM	AMENDMENT
APPROX	APPROXIMATE
ASSOC, ASSN	ASSOCIATION
ASSY	ASSEMBLY
AVE	AVENUE
AWWA	AMERICAN WATER WORKS ASSOCIATION
BH	BORE HOLE
BFV	BUTTERFLY VALVE
BOT, BTM	BOTTOM
C	CENTER
CLSM	CONTROLLED LOW STRENGTH MATERIAL
CAV	COMBINATION AIR RELEASE AND VACUUM VALVE
CDOT	COLORADO DEPARTMENT OF TRANSPORTATION
CL, ℄	CENTERLINE, CENTURY LINK
CLR	CLEAR
CONC	CONCRETE
CONT	CONTINUATION
COORD	COORDINATION
COMB	COMBINATION
COT	CITY OF THORNTON
D.I.	DUCTILE IRON
DCP	DCP MIDSTREAM
DET	DETENTION, DETAIL
DEVLP	DEVELOPER
DIP	DUCTILE IRON PIPE
DWG	DRAWING
E	EAST, EASTING
EG	EXISTING GROUND
EL, ELEV	ELEVATION
ELEC	ELECTRIC
EOP	EDGE OF PAVEMENT
ESMT	EASEMENT
EW	EARLY WORKS
EX, EXIST	EXISTING
FLG	FLANGE, FLANGED
FM	FORCE MAIN
FO	FIBER OPTIC
FUT	FUTURE
GA	GAUGE
GALV	GALVANIZED
HORIZ	HORIZONTAL
HDPE	HIGH DENSITY POLYETHYLENE
HH	HANDHOLE
HP	HIGH PLAIN WATR
I/R	ISSUE/REVISION
IFB	ISSUE FOR BID
INT	INTERCEPTOR
INV	INVERT
KPK	K.P. KAUFFMAN
LBS	POUNDS
MAX	MAXIMUM
METRO	METRO WASTEWATER RECLAMATION DISTRICT
MH	MAINTENANCE HOLE, MANHOLE
MIN	MINIMUM
MIP	MALE IRON PIPE
MS	MIDSTREAM
N	NORTHING
NAVD	NORTH AMERICAN VERTICAL DATUM
NF	NOT FOUND
NGAS	NATURAL GAS
NO	NUMBER
NTS	NOT TO SCALE
O&G	OIL AND GAS
OC	ON CENTER
OD	OUTSIDE DIAMETER
O/S	OFFSET
PE	PERMANENT EASEMENT, POLYETHYLENE
PH	PHASE
PSI	POUNDS PER SQUARE INCH
PROP	PROPOSED
PVC	POINT VERTICAL CURVE
PVC	POLY VINYL CHLORIDE
PVI	POINT VERTICAL INTERSECTION
PVT	POINT VERTICAL TANGENT
R	RADIUS
RCP	REINFORCED CONCRETE PIPE
REC	RECEPTION
REQD	REQUIRED
ROE	RIGHT OF ENTRY
ROW	RIGHT OF WAY
S	SLOPE
SAN	SANITARY SEWER
SCH	SCHEDULE
SEG	SEGMENT
SHT	SHEET
ST	STREET
STA	STATION
STL	STEEL
SS	STAINLESS STEEL
STRM	STORM SEWER
SUE	SUBSURFACE UTILITY ENGINEERING
THICK.	THICKNESS
TB	TUNNEL BORE
TE	TEMPORARY EASEMENT
TELE	TELEPHONE
TOP	TOP OF PIPE
TRANS	TRANSPORTATION
TWP	THORNTON WATER PROJECT
TYP	TYPICAL
UE	UTILITY EASEMENT
UP	UNITED POWER
VERT	VERTICAL
VLV	VALVE
W/	WITH
WELD	WELD COUNTY
WTP	WATER TREATMENT PLANT
YR	YEAR
Δ	HORIZONTAL DEFLECTION ANGLE
Ø	DIAMETER

EXISTING UTILITIES:

- MAJOR CONTOUR
- MINOR CONTOUR
- TOP BACK OF CURB
- GUTTER (CONCRETE EDGE)
- CONCRETE
- EDGE OF PAVEMENT
- DIRT ROAD
- MISC/ROW LANDSCAPE CURBING
- RETAINING WALL
- FENCE
- GUARD RAIL
- HAND RAIL
- WATER EDGE
- INTERMITTENT DRAINAGE
- CULVERT HEADWALL
- CULVERT PIPE
- DRAINS
- DRAIN INLETS
- TREES CONIFER/DECIDUOUS
- BUSH SYMBOL
- LIGHT POLE/ARM
- LIGHT POLE
- POWER POLES
- POLE ANCHOR
- TRAFFIC SIGNAL
- CROSSWALK SIGNAL
- TRANSMISSION TOWER
- FIRE HYDRANT
- VALVE COVER
- MANHOLE
- MAIL BOX
- POST
- BILLBOARD
- SIGN/BUSINESS SIGN
- UTIL. VAULT/BOX
- PAINT STRIPING
- MISCELLANEOUS
- SPEED BUMP
- CATTLE GUARD
- PHOTO CONTROL

- EXISTING OVERHEAD ELECTRIC
- EXISTING UNDERGROUND ELECTRIC
- EXISTING UNDERGROUND FIBER OPTIC
- EXISTING UNDERGROUND TELEPHONE
- EXISTING GAS
- EXISTING SANITARY SEWER
- EXISTING STORM
- EXISTING WATER
- EXISTING WATER METER

- FEMA 100-YEAR FLOODPLAIN BOUNDARY
- EXISTING WETLAND
- EXISTING PRAIRIE DOG HABITAT

GEOTECHNICAL:

- LEAN CLAY (CL)
- PEA GRAVEL
- CLAYEY SAND (SC)
- CLAYSTONE
- SILTSTONE
- STANDSTONE
- INTERBEDDED SILTSTONE AND CLAYSTONE
- SILTY SAND (SM)
- SANDY LEAN CLAY (CL)
- SILTY CLAYSTONE

PROPOSED THORNTON WATER PROJECT UTILITIES:

- PROPOSED PIPE
- PERMANENT EASEMENT
- TEMPORARY EASEMENT
- GEOTECHNICAL INVESTIGATION BORE HOLE
- CONSTRUCTION WORK LIMITS WITHIN CITY OF THORNTON-OWNED PROPERTY
- PROPOSED FO HANDHOLE (UNPAVED AREAS)
- PROPOSED FO MAINTENANCE HOLE (PAVED AREAS)

FUTURE DEVELOPER UTILITIES:

- FUTURE SANITARY SEWER
- FUTURE ELECTRIC
- FUTURE FORCE MAIN
- FUTURE STORM
- FUTURE WATER
- FUTURE EDGE OF PAVEMENT
- FUTURE FIRE HYDRANT
- FUTURE MANHOLE
- FUTURE SIDEWALK
- FUTURE STORM INLET

SURVEY CONTROLS:

- EXISTING RIGHT OF WAY LINE - ACCESS CONTROLED
- EXISTING RIGHT OF WAY LINE
- EXISTING PROPERTY LINE
- EXISTING SECTION LINE
- EXISTING QUARTER SECTION LINE
- EXISTING EASEMENT
- PROJECT CONTROL MONUMENT
- FOUND ALIQUOT CORNER
- FOUND REBAR AND ALUMINUM CAP
- FOUND REBAR AND PLASTIC CAP
- FOUND BARE REBAR
- FOUND NAIL

AECOM

Thornton WATER PROJECT

TWP SEG A, PHASE 1
PROJECT No. 12-777H5

CLIENT

CITY OF THORNTON
12450 WASHINGTON ST,
THORNTON, CO 80241
720.977.6700 tel 000.000.0000 fax
www.thorntonwaterproject.com

CONSULTANT

AECOM
7595 TECHNOLOGY WAY, STE 200
DENVER, CO 80237
T 303.694.2770 F 303.694.3946
www.aecom.com

ISSUE/REVISION

I/R	DATE	DESCRIPTION
E	10/15/2021	PRE-FINAL SUBMITTAL
C	04/27/2021	75% SUBMITTAL
B	09/25/2020	35% FINAL SUBMITTAL
A	04/21/2020	35% SUBMITTAL

VERIFIED SCALES

BAR IS ONE INCH ON ORIGINAL DRAWING
0 1"
IF NOT ONE INCH ON THIS SHEET, ADJUST SCALES ACCORDINGLY

DRAWN BY:	SEM/JEC
CHKD BY:	MG
CHKD BY:	CAT
APPD BY:	WEW

PROJECT NUMBER

60619101

SHEET TITLE

LEGEND AND ABBREVIATIONS

SHEET NUMBER

G003 4 OF 216

GENERAL NOTES:

1. TOPOGRAPHY AND SURFACE FEATURES FOR THE DRAWINGS ARE BASED ON SURVEY INFORMATION OBTAINED FROM FIELD SURVEY PERFORMED BY SYNERGY MAPPING, 11027 S PIKES PEAK DR. #203 PARKER, COLORADO 80138.
2. ALL MATERIALS, CONSTRUCTION METHODS AND TESTING SHALL BE IN ACCORDANCE WITH THESE CONTRACT DOCUMENTS AND BE SUBJECT TO CONSTRUCTION OBSERVATION BY THE CITY OF THORNTON REPRESENTATIVES OR PERSONNEL.
3. THE CONTRACTOR IS RESPONSIBLE FOR PROCUREMENT OF ALL PERMITS, EXCEPT THOSE NOTED IN THE SPECIFICATIONS TO BE OBTAINED BY THE OWNER, FOR CONSTRUCTION OF THE IMPROVEMENTS SHOWN AND NOTIFYING ALL UTILITY COMPANIES AFFECTED BY THIS CONSTRUCTION.
4. THE CONTRACTOR SHALL VERIFY LOCATION AND ELEVATIONS OF EXISTING UTILITIES, WATERLINES AND STRUCTURES PRIOR TO CONSTRUCTION BY CONTACTING THE APPROPRIATE UTILITY AGENCIES 48 HOURS PRIOR TO ANY EXCAVATION TO OBTAIN UTILITY LOCATIONS. CONTRACTOR SHALL CONTACT UNCC AT 1-800-922-1987.
5. THE LOCATION OF EXISTING UTILITIES SHOWN ON PLANS ARE APPROXIMATE ONLY AND NOT ALL UTILITIES MAY BE SHOWN. UTILITIES THAT WERE POTHOLED IN DESIGN ARE LABELED IN THE PROFILE. THE CONTRACTOR SHALL DETERMINE THE EXACT LOCATION OF ALL EXISTING UTILITIES BEFORE COMMENCING WORK. THE CONTRACTOR SHALL BE FULLY RESPONSIBLE FOR ANY AND ALL DAMAGES AND COSTS WHICH MIGHT BE INCURRED BY HIS FAILURE TO EXACTLY LOCATE AND PROTECT ANY AND ALL UTILITIES.
6. MINIMUM DEPTH FROM GROUND SURFACE TO TOP OF PIPE SHALL BE 5 FT.
7. WHERE EXCAVATION IS REQUIRED UNDER PAVED AREAS, THE PAVEMENT SHALL BE SAWCUT IN SUCH A MANNER AS TO EFFECT A SMOOTH STRAIGHT SAWCUT EDGE AS A VERTICAL FACE IN COMPLIANCE WITH CITY OF THORNTON AND ADAMS COUNTY STANDARDS, WHERE APPLICABLE. STREET CUT PERMITS WILL BE REQUIRED FROM THE CITY OF THORNTON AND ADAMS COUNTY PUBLIC WORKS. ROW PERMITS WILL BE REQUIRED FROM THORNTON AND WELD COUNTY.
8. THE CONTRACTOR SHALL CONFORM TO THE CURRENT OSHA REGULATIONS FOR EXCAVATION AND CONFINED SPACE ENTRY.
9. THE CONTRACTOR SHALL MAINTAIN, ON THE PROJECT SITE, A FULL SET OF CONSTRUCTION DRAWINGS RECORDING ALL INFORMATION PERTAINING TO THE CONSTRUCTION OF THE WATER PIPELINE. THESE RECORD DRAWINGS SHALL BE PROVIDED TO THE OWNER UPON COMPLETION OF THE PROJECT FOR DEVELOPMENT OF RECORD DRAWINGS.
10. THE CONTRACTOR SHALL CONFINE CONSTRUCTION OPERATIONS WITHIN THE OWNER'S EXISTING EASEMENTS AND RIGHT-OF-WAY LIMITS PARALLEL TO THE ALIGNMENT INDICATED ON THE DRAWINGS, AND SHALL USE DUE CARE IN PLACING CONSTRUCTION TOOLS, EQUIPMENT, EXCAVATED MATERIALS, AND PIPELINE MATERIALS AND SUPPLIES SO AS TO CAUSE THE LEAST POSSIBLE DAMAGE TO PROPERTY AND INTERFERENCE WITH TRAFFIC. CONTRACTOR SHALL OBTAIN ANY ADDITIONAL STAGING AREAS NEEDED FOR CONSTRUCTION OPERATIONS. CONTRACTOR TO AVOID STORING EQUIPMENT AND MATERIALS IN RESIDENTIAL AREAS.
11. THE CONTRACTOR SHALL BE RESPONSIBLE FOR REMOVING, RESETTING AND/OR REPLACING ANY EXISTING SIGNS, CULVERTS, STRUCTURES, LANDSCAPING, FENCES, ETC. ENCOUNTERED ON THE JOB AND RESTORING THEM TO THEIR ORIGINAL CONDITION.
12. COMPACTION OF ALL TRENCH BACKFILL MUST BE ATTAINED. COMPACTION SHALL BE IN ACCORDANCE WITH THE SPECIFICATIONS IN THESE CONTRACT DOCUMENTS.
13. WORK HOURS SHALL BE AS NOTED IN THE SPECIFICATIONS AND AS ALLOWED ON ISSUED PERMITS. ALL OPEN EXCAVATIONS NOT BACKFILLED SHALL BE PROPERLY BARRICADED OR OTHER SUITABLE PROTECTION APPROVED BY THE OWNER AT THE END OF EACH DAY'S CONSTRUCTION. UNLESS OTHERWISE PERMITTED WORK HOURS ON ACTIVE ROADWAYS SHALL BE RESTRICTED WITHIN 8:30AM TO 3:30PM AND IN ACCORDANCE WITH NOISE ORDINANCE(S) OF THE APPLICABLE JURISDICTION(S).
14. HORIZONTAL AND VERTICAL DEFLECTION OF THE PIPE SHALL NOT EXCEED MANUFACTURER'S RECOMMENDATIONS FOR THE PIPE MATERIAL AND TEST PRESSURES SPECIFIED.
15. CONTRACTOR SHALL NOTIFY OWNER 50 CALENDAR DAYS IN ADVANCE OF CONSTRUCTION ACTIVITIES SO OWNER CAN MAKE CONTACT WITH THE PROPERTY OWNER TO INITIATE ACTIVATION OF THE TEMPORARY CONSTRUCTION EASEMENT.
16. CONTRACTOR SHALL PROTECT EXISTING POWER LINES.
17. GRADE RINGS MAY BE REQUIRED IN DEVELOPER AREAS THAT SHOW FINISHED GRADE BELOW EXISTING GROUND.
18. IN DEVELOPER AREAS THAT SHOW FINISHED GRADE BELOW EXISTING GROUND, RIM OF STRUCTURES ARE SET TO FUTURE GRADE. ADJUST AS NEEDED TO MEET EXISTING GROUND. GRADE RINGS FOR ADJUSTMENTS UP TO 2'-0", GREATER THAN THAT PROVIDE HORIZONTAL JOINT IN STRUCTURE 2'-0" BELOW FUTURE GRADE, AND SET TOP OF STRUCTURE AT EXISTING GROUND.

PROTECTION OF WORK AND PROPERTY

1. CONTRACTOR SHALL PROTECT AND MAINTAIN ALL UTILITIES, STRUCTURES, IMPROVEMENTS, MONUMENTS AND BENCHMARKS AFFECTED BY THE WORK NOT DESIGNATED FOR DEMOLITION OR REMOVAL AND REPLACEMENT. ANY DAMAGE SHALL BE REPAIRED AND RESTORED TO THE SATISFACTION OF THE AFFECTED OWNER, PUBLIC AGENCIES, AND THE ENGINEER AT THE EXPENSE OF THE CONTRACTOR.
2. CONTRACTOR SHALL IMPLEMENT PROCEDURES TO MINIMIZE EROSION OF AREAS DISTURBED BY THE WORK IN ACCORDANCE WITH APPLICABLE PERMIT(S). CONTRACTOR SHALL MAINTAIN ALL DISTURBED AREAS UNTIL NATIVE VEGETATION IS RE-ESTABLISHED IN ACCORDANCE WITH PERMIT REQUIREMENTS AND TO THE SATISFACTION OF THE CITY AND/OR PROJECT FINAL ACCEPTANCE.

GAS, ELECTRIC, TELEPHONE, & FIBER OPTIC LINES

1. THE CONTRACTOR ASSUMES RESPONSIBILITY FOR WORKING AROUND AND PROTECTING ALL UTILITIES WHETHER SHOWN ON THE DRAWINGS OR NOT. EXISTING BURIED UTILITIES AND STRUCTURE LOCATIONS ARE APPROXIMATE AND MAY NOT REPRESENT ALL BURIED UTILITIES OR STRUCTURES PRESENT.
2. CONTRACTOR TO VERIFY BY POTHOLING ALL KNOWN UTILITY CROSSINGS OR ADJACENT UTILITIES PRIOR TO CONSTRUCTION.
3. CONTRACTOR TO FIELD VERIFY EXISTING TELEPHONE LINES WITH UTILITY COMPANY.
4. CONTRACTOR TO FIELD VERIFY EXISTING FIBER OPTIC LINES WITH UTILITY COMPANY.
5. WHEN WORK IS PERFORMED ADJACENT TO OVERHEAD HIGH POWER LINES AND WITHIN OR ADJACENT TO ENERGY OWNER ROW, THE CONTRACTOR SHALL CALL THE ENERGY PROVIDER 72 HOURS IN ADVANCE TO SCHEDULE A TRANSMISSION LINE PATROLMAN TO MONITOR THE WORK.

UTILITY CONTACT LIST: *

UTILITY COMPANY CONTACT	CONTACT	TELEPHONE	E-MAIL
Project Director (OWNER)	Mark Koleber		Mark.Koleber@thorntonco.gov
Project Engineer	John Himyak, P.E.		John.Himyak@thorntonco.gov
Thornton Water Project - PM, Owner Representative	Eduardo Moreno	720-977-6272	Eduardo.Moreno@ThorntonCO.gov
Adams County Government (1041 Coordinator)	Layla Bajelan	720-523-6863	LBajelan@adcogov.org
CDOT Region 1	James Olson	970-218-8225	
CenturyLink - FIBER, TELEPHONE	Nicole Frank	720-578-3714	nicole.frank@centurylink.com
CenturyLink/Lumen (via TERRATECH)	Justin Metzler	303-525-7086	jmetzler@terratechllc.net
City of Thornton Utility Locates	Scott Wenger	303-726-6692	info@utilisync.com
City of Thornton Traffic Engineer	Darrel Alston, P.E.	720-977-6480	
Comcast - CATV, FIBER	Aaron Rudd	720-708-8902	aaron_rudd@cable.comcast.com
DCP Midstream - GAS PIPELINE	Gary Bradsher	970-628-6807	Gbradsher@dcpmidstream.com
Discovery DJ Services - GAS PIPELINE	Kyle	570-561-6464	kyleslocates@gmail.com
E-470 Highway Authority - FIBER OPTIC	Vincent DeMaio	303-968-9542	vdemaio@e-470.com
E-470 Highway Authority - GENERAL	Chuck Weiss	303-537-3420	cweiss@e-470.com
High Plains Water - WATER	Eloy Trujillo	303-888-8163	letclt@aol.com
K.P. Kauffman Co. - GAS PIPELINE	Don Horner	303-472-0619	Dhorner@kpk.com
	Avi Mehler		AMehler@kpk.com
Kerr McGee Anadarko - ELECTRIC	Keaton Holmes	720-550-0681	Keaton_Holmes@oxy.com
Kerr McGee Anadarko Gathering - GAS PIPELINE	Keaton Holmes	720-550-0681	Keaton_Holmes@oxy.com
Kerr McGee Anadarko Platte - GAS PIPELINE	Keaton Holmes	720-550-0681	Keaton_Holmes@oxy.com
Kerr McGee Anadarko Production - GAS PIPELINE	Keaton Holmes	720-550-0681	Keaton_Holmes@oxy.com
Kerr McGee Anadarko Water - WATER	Keaton Holmes	720-550-0681	Keaton_Holmes@oxy.com
MCI/Verizon	Lane Grady	303-827-9756	lane.grady@verizon.com
Metro Wastewater Reclamation District	Craig Simmonds	303-286-3338	locate@mwrd.dst.co.us CSimmonds@mwrd.dst.co.us
Mountain View Water	John Howard	303-659-0798	
OXY Western Midstream (Anadarko)	Keaton Holmes	720-550-0681	Keaton.Holmes@westernmidstream.com
	Brett Cavanagh	720-929-3296	Brett.Cavanagh@westernmidstream.com
POCO Gas	Frederick Witsell	303-881-2157	fwitsell@providence-energy.com
School District 27J - Brighton - FIBER OPTIC	Lindsay Craig	303-655-2996	LKCraig@sd27j.net
Todd Creek Village Metro District - WATER, IRRIGATION	Bret Kelso	720-442-6224	bkelso@toddcreekvillage.org
United Power, Inc. - ELECTRIC	Jared Odom		
	Bryce Lanckriet	720-763-5201	blanckriet@unitedpower.com
Williams Gas & Oil	Troy Brewster	970-408-1760	TROY.BREWSTER@WILLIAMS.COM
Xcel Energy - ELECTRIC, GAS	Lawrence Carabajal	303-245-2320	lawrence.carabajal@xcelenergy.com
Xcel Energy - HI PRESSURE GAS	Emerald Messo		emerald.messo@xcelenergy.com
Xcel Energy - OVERHEAD ELECTRIC INFRASTRUCTURE	William Braasch	303-571-7082	william.braasch@xcelenergy.com
Xcel Energy - UNDERGROUND ELECTRIC INFRASTRUCTURE	Lonnie Martinez	303-571-7654	lonnie.martinez@xcelenergy.com
Xcel Energy - High Voltage	William Braasch	303-571-7082	william.braasch@xcelenergy.com
Zayo	Tim Aragon	720-208-6008	timothy.aragon@zayo.com

* COORDINATION WITH UTILITY COMPANIES IN PROGRESS TO ESTABLISH WHAT UTILITY CROSSING AGREEMENTS ARE REQUIRED, IF ANY.

AECOM

Thornton WATER PROJECT

TWP SEG A, PHASE 1
PROJECT No. 12-777H5

CLIENT

CITY OF THORNTON
12450 WASHINGTON ST,
THORNTON, CO 80241
720.977.6700 tel 000.000.0000 fax
www.thorntonwaterproject.com

CONSULTANT

AECOM
7595 TECHNOLOGY WAY, STE 200
DENVER, CO 80237
T 303.694.2770 F 303.694.3946
www.aecom.com

ISSUE/REVISION

I/R	DATE	DESCRIPTION
E	10/15/2021	PRE-FINAL SUBMITTAL
C	04/27/2021	75% SUBMITTAL
B	09/25/2020	35% FINAL SUBMITTAL
A	04/21/2020	35% SUBMITTAL

VERIFIED SCALES

BAR IS ONE INCH ON ORIGINAL DRAWING
0 1"
IF NOT ONE INCH ON THIS SHEET, ADJUST SCALES ACCORDINGLY

DRAWN BY:	SEM/JEC
CHKD BY:	MG
CHKD BY:	CAT
APPD BY:	WEW

PROJECT NUMBER

60619101

SHEET TITLE

GENERAL NOTES

SHEET NUMBER

G004

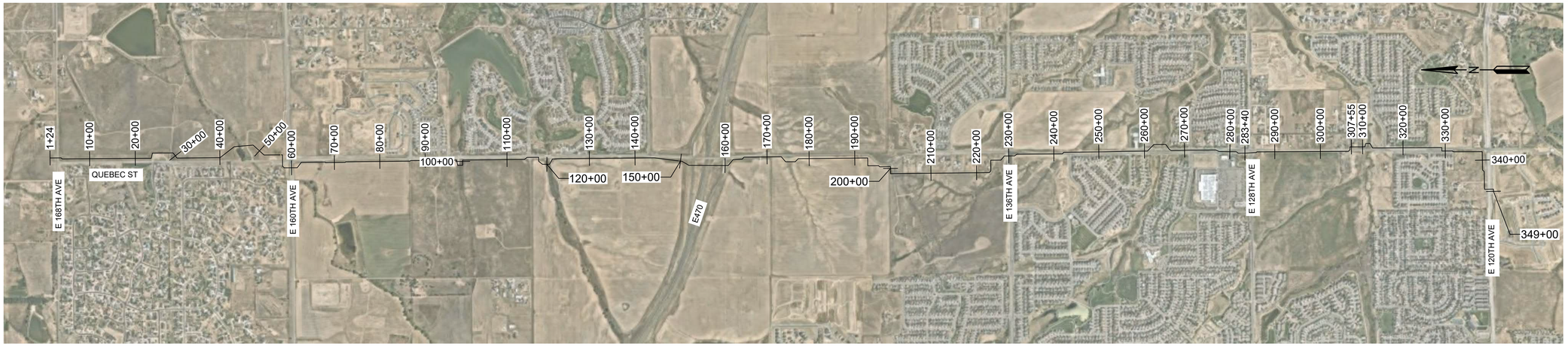

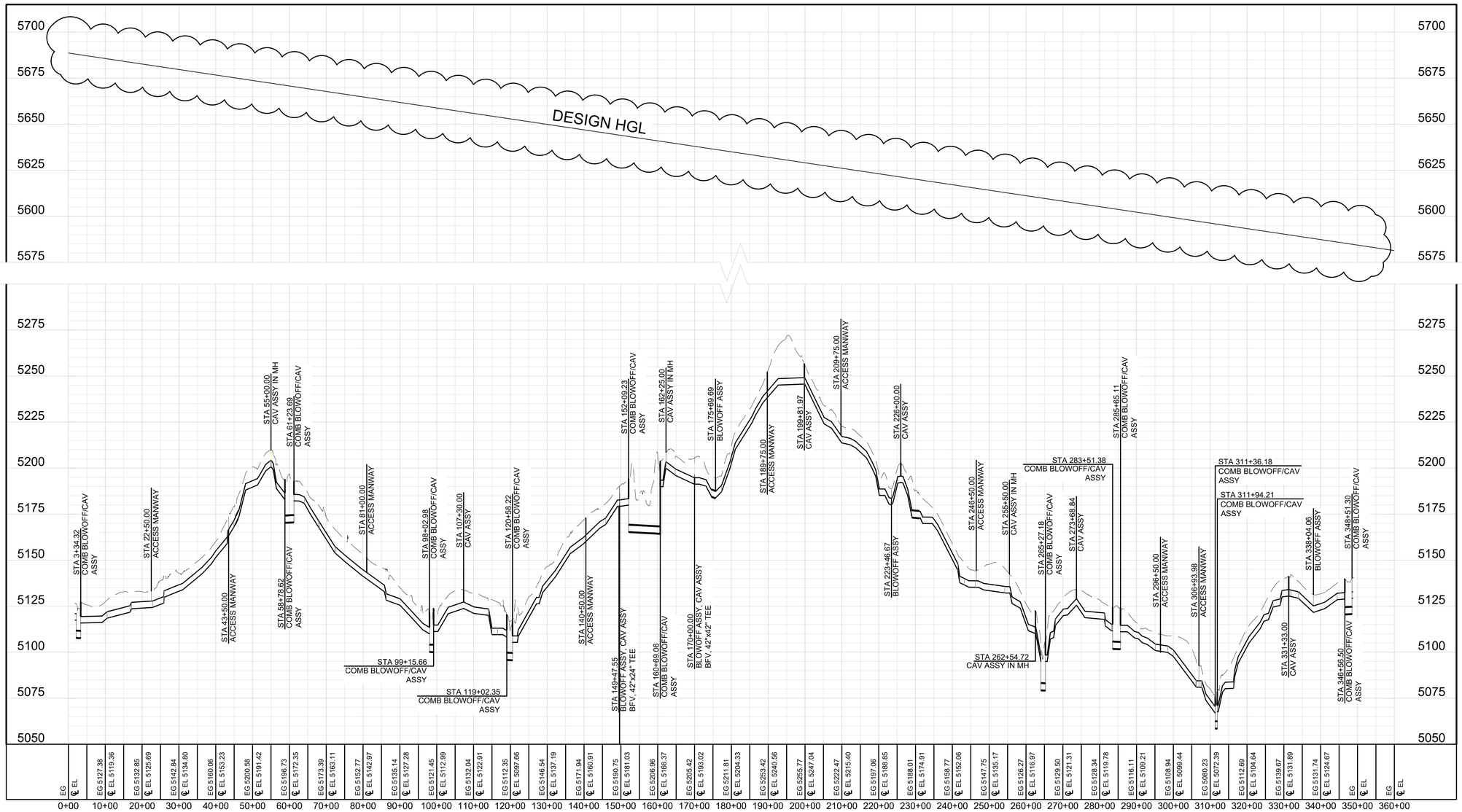

C:\pwworking\aecom_ds20_na_2019\jenna.crouch@aecom.com\d0105068\G-05-HYDR-GRADE.dwg

AECOM

Thornton WATER PROJECT

TWP SEG A, PHASE 1
PROJECT No. 12-777H5

CLIENT

CITY OF THORNTON
12450 WASHINGTON ST,
THORNTON, CO 80241
720.977.6700 tel 000.000.0000 fax
www.thorntonwaterproject.com

CONSULTANT

AECOM
7595 TECHNOLOGY WAY, STE 200
DENVER, CO 80237
T 303.694.2770 F 303.694.3946
www.aecom.com

ISSUE/REVISION

I/R	DATE	DESCRIPTION
E	10/15/2021	PRE-FINAL SUBMITTAL
C	04/27/2021	75% SUBMITTAL
B	09/25/2020	35% FINAL SUBMITTAL
A	04/21/2020	35% SUBMITTAL

VERIFIED SCALES

0 1500 3000
SCALE: HORIZ. 1"=1500'
VERT. 1"=50'

BAR IS ONE INCH ON ORIGINAL DRAWING
0 1"
IF NOT ONE INCH ON THIS SHEET, ADJUST SCALES ACCORDINGLY

DRAWN BY:	SEM/JEC
CHKD BY:	MG
CHKD BY:	CAT
APPD BY:	WEW

PROJECT NUMBER

60619101

SHEET TITLE

HYDRAULIC GRADE LINE

SHEET NUMBER

G005

GEODETIC COORDINATE TABLE

Point No.	Geodetic Coordinates NAD-83 (2011) (CONUS) (0501)		Ellipsoid Height (NAVD88)(ft)	Ortho Height (NAVD88)(ft)	Meridian Convergence Angle	Combined Scale Factor	NAD-83 (2011) (CONUS) Zone (0501)		Description
	Latitude(N)	Longitude(W)					SP Northing(ft)	SP Easting(ft)	
95.0104	40d00'00.74834"	-104d54'11.42751"	5,068.68	5,127.07	0d23'08.3"	0.999724055	1,243,485.23	3,167,201.09	3-1/4" Aluminum Survey Mark in 6" PVC pipe with Igoo cap Stamped "95.0104 1995""
95.0116	39d59'12.05269"	-104d53'57.95795"	5,140.85	5,199.22	0d23'17.0"	0.999721659	1,238,565.05	3,168,282.64	3-1/4" Aluminum Survey Mark in 6" PVC pipe with Igoo cap Stamped "95.0116 1995""
95.0166	39d55'42.33480"	-104d54'06.81837"	5,058.58	5,116.69	0d23'11.2"	0.999730758	1,217,340.18	3,167,736.13	3-1/4" Aluminum Survey Mark in 6" PVC pipe with Igoo cap Stamped "95.0166 1995""
95.0170	39d55'08.35405"	-104d53'26.04177"	5,013.79	5,071.98	0d23'37.6"	0.999733833	1,213,923.50	3,170,936.27	3-1/4" Aluminum Survey Mark in 6" PVC pipe with Igoo cap Stamped "95.0170 1995""
95.0190	39d53'58.72465"	-104d54'56.64893"	5,059.58	5,117.39	0d22'39.0"	0.999733641	1,206,830.59	3,163,923.39	3-1/4" Aluminum Survey Mark in 6" PVC pipe with Igoo cap Stamped "95.0190 1995""
AT14	39d58'49.44205"	-104d54'11.17460"	5,091.24	5,149.55	0d23'08.4"	0.999724538	1,236,270.25	3,167,269.34	Set #6 x 30" rebar with 2" aluminum cap stamped: "AECOM AT 14".
AT20	39d58'13.81371"	-104d54'10.92608"	5,069.78	5,128.06	0d23'08.6"	0.999726387	1,232,665.34	3,167,312.95	Set #6 x 30" rebar with 2" aluminum cap stamped: "AECOM AT 20".
AT26	39d57'29.46405"	-104d54'10.87837"	5,144.70	5,202.92	0d23'08.6"	0.999723874	1,228,177.86	3,167,346.88	Set #6 x 30" rebar with 2" aluminum cap stamped: "AECOM AT 26".
AT35	39d56'44.50420"	-104d54'11.52124"	5,148.01	5,206.17	0d23'08.2"	0.999724845	1,223,628.29	3,167,327.44	Set #6 x 30" rebar with 2" aluminum cap stamped: "AECOM AT 35".
AT38	39d56'27.14168"	-104d54'11.16946"	5,108.13	5,166.28	0d23'08.4"	0.9997272	1,221,871.65	3,167,366.66	Set #6 x 30" rebar with 2" aluminum cap stamped: "AECOM AT 38".
AT41	39d56'08.36294"	-104d54'12.06447"	5,079.77	5,137.90	0d23'07.9"	0.999729048	1,219,971.07	3,167,309.74	Set #6 x 30" rebar with 2" aluminum cap stamped: "AECOM AT 41".
AT44	39d55'50.91828"	-104d54'11.23194"	5,074.08	5,132.19	0d23'08.4"	0.999729785	1,218,206.38	3,167,386.47	Set #6 x 30" rebar with 2" aluminum cap stamped: "AECOM AT 44".
AT47	39d55'32.80060"	-104d54'11.35647"	5,052.72	5,110.81	0d23'08.3"	0.999731297	1,216,373.09	3,167,389.10	z e
AT50	39d55'14.80068"	-104d54'10.39567"	5,033.87	5,091.94	0d23'08.9"	0.999732693	1,214,552.29	3,167,476.22	Set #6 x 30" rebar with 2" aluminum cap stamped: "AECOM AT 50".
BIG DRY	39d59'22.40582"	-104d56'25.78078"	5,044.40	5,102.35	0d21'41.5"	0.99972604	1,239,537.37	3,156,770.39	3-1/4" Brass Survey Mark Stamped "BIG DRY 1995" in 24" Diameter Conctrete Post
CP01	39d59'40.20597"	-104d54'12.96472"	5,076.83	5,135.19	0d23'07.3"	0.999724103	1,241,405.85	3,167,095.45	Set #6 x 30" rebar with 2" aluminum cap stamped: "AECOM CP 01".
CP02	39d59'11.55427"	-104d54'12.59422"	5,142.69	5,201.02	0d23'07.5"	0.999721582	1,238,506.92	3,167,143.78	Set #6 x 30" rebar with 2" aluminum cap stamped: "AECOM CP 02".
CP03	39d57'44.20537"	-104d54'12.45984"	5,144.02	5,202.26	0d23'07.6"	0.999723547	1,229,668.63	3,167,213.70	Set #6 x 30" rebar with 2" aluminum cap stamped: "AECOM CP 03".
CP04	39d57'01.44397"	-104d54'11.61688"	5,234.14	5,292.33	0d23'08.1"	0.999720298	1,225,342.28	3,167,308.45	Set #6 x 30" rebar with 2" aluminum cap stamped: "AECOM CP 04".
CP05	39d54'58.90837"	-104d54'11.34398"	5,084.37	5,142.41	0d23'08.3"	0.999730724	1,212,943.74	3,167,413.16	Set #6 x 30" rebar with 2" aluminum cap stamped: "AECOM CP 05".
CP06	39d54'52.27620"	-104d54'10.61317"	5,074.91	5,132.94	0d23'08.8"	0.999731363	1,212,273.05	3,167,474.62	Set #6 x 30" rebar with 2" aluminum cap stamped: "AECOM CP 06".
EASTLAKE	39d56'31.98170"	-104d57'32.14711"	5,171.98	5,229.48	0d20'58.6"	0.999724022	1,222,260.95	3,151,710.27	3-1/4" Brass Survey Mark Stamped "EAST LAKE 1995" in 24" Diameter Conctrete Post
HI LAND	39d59'12.70058"	-104d52'26.50301"	5,066.97	5,125.61	0d24'16.1"	0.999725175	1,238,679.83	3,175,400.46	3-1/4" Brass Survey Mark Stamped "HI LAND 1995" in 24" Diameter Conctrete Post
J 260	39d53'48.27278"	-104d52'11.55598"	5,017.28	5,075.56	0d24'25.7"	0.999735972	1,205,861.13	3,176,797.11	3-1/2" Bronze Bench Mark Disk Stamped "J 260 1938"
J 411	39d53'10.44763"	-104d55'36.86927"	5,040.86	5,098.47	0d22'13.1"	0.999735987	1,201,925.26	3,160,820.45	Stainless Steel Rod in 5" Logo Cap
L 260	39d56'09.42826"	-104d50'37.66993"	4,976.23	5,034.96	0d25'26.4"	0.999733968	1,220,196.84	3,184,008.54	3-1/2" Bronze Bench Mark Disk Stamped "L 260 1938" in top of 12" square concrete post.
RAMONA RESET	40d02'37.25613"	-104d58'41.42947"	5,109.61	5,167.22	0d20'13.8"	0.999719088	1,259,189.04	3,146,096.71	3-1/4" Brass Survey Mark Stamped "ROMONA RESET CITY AND COUNTY OF BROOMFIELD"
RODRIGUEZ	39d50'26.18792"	-104d54'01.18605"	5,096.45	5,154.09	0d23'14.9"	0.999738674	1,185,354.16	3,168,391.22	3 1/2" Brass Survey Mark with logo stamped "RODRIGUEZ 1995" set in concrete.
ROTELLA	39d50'21.85019"	-104d57'58.13979"	5,139.08	5,195.91	0d20'41.8"	0.999736787	1,184,797.11	3,149,911.30	3-1/4" Aluminum Survey Mark in 6" PVC pipe with logo cap Stamped "ROTELLA 1995""

PROJECT COORDINATE TABLE

Point No.	Project Coordinates		Elev(ft) (NAVD 88)	Description
	Northing(ft)	Easting(ft)		
95.0104	243,492.27	167,200.95	5,127.07	3-1/4" Aluminum Survey Mark in 6" PVC pipe with Igoo cap Stamped "95.0104 1995""
95.0116	238,570.76	168,282.79	5,199.22	3-1/4" Aluminum Survey Mark in 6" PVC pipe with Igoo cap Stamped "95.0116 1995""
95.0166	217,340.18	167,736.13	5,116.69	3-1/4" Aluminum Survey Mark in 6" PVC pipe with Igoo cap Stamped "95.0166 1995""
95.0170	213,922.58	170,937.13	5,071.98	3-1/4" Aluminum Survey Mark in 6" PVC pipe with Igoo cap Stamped "95.0170 1995""
95.0190	206,827.76	163,922.36	5,117.39	3-1/4" Aluminum Survey Mark in 6" PVC pipe with Igoo cap Stamped "95.0190 1995""
AT14	236,275.35	167,269.21	5,149.55	Set #6 x 30" rebar with 2" aluminum cap stamped: "AECOM AT 14".
AT20	232,669.46	167,312.84	5,128.06	Set #6 x 30" rebar with 2" aluminum cap stamped: "AECOM AT 20".
AT26	228,180.78	167,346.77	5,202.92	Set #6 x 30" rebar with 2" aluminum cap stamped: "AECOM AT 26".
AT35	223,629.98	167,327.33	5,206.17	Set #6 x 30" rebar with 2" aluminum cap stamped: "AECOM AT 35".
AT38	221,872.87	167,366.56	5,166.28	Set #6 x 30" rebar with 2" aluminum cap stamped: "AECOM AT 38".
AT41	219,971.78	167,309.62	5,137.90	Set #6 x 30" rebar with 2" aluminum cap stamped: "AECOM AT 41".
AT44	218,206.61	167,386.37	5,132.19	Set #6 x 30" rebar with 2" aluminum cap stamped: "AECOM AT 44".
AT47	216,372.83	167,389.01	5,110.81	Set #6 x 30" rebar with 2" aluminum cap stamped: "AECOM AT 47".
AT50	214,551.54	167,476.15	5,091.94	Set #6 x 30" rebar with 2" aluminum cap stamped: "AECOM AT 50".
BIG DRY	239,543.34	156,767.44	5,102.35	3-1/4" Brass Survey Mark Stamped "BIG DRY 1995" in 24" Diameter Conctrete Post
CP01	241,412.33	167,095.27	5,135.19	Set #6 x 30" rebar with 2" aluminum cap stamped: "AECOM CP 01".
CP02	238,512.62	167,143.62	5,201.02	Set #6 x 30" rebar with 2" aluminum cap stamped: "AECOM CP 02".
CP03	229,671.95	167,213.56	5,202.26	Set #6 x 30" rebar with 2" aluminum cap stamped: "AECOM CP 03".
CP04	225,344.43	167,308.34	5,292.33	Set #6 x 30" rebar with 2" aluminum cap stamped: "AECOM CP 04".
CP05	212,942.56	167,413.07	5,142.41	Set #6 x 30" rebar with 2" aluminum cap stamped: "AECOM CP 05".
CP06	212,271.69	167,474.55	5,132.94	Set #6 x 30" rebar with 2" aluminum cap stamped: "AECOM CP 06".
EASTLAKE	222,262.27	151,705.95	5,229.48	3-1/4" Brass Survey Mark Stamped "EAST LAKE 1995" in 24" Diameter Conctrete Post
HI LAND	238,685.58	175,402.53	5,125.61	3-1/4" Brass Survey Mark Stamped "HI LAND 1995" in 24" Diameter Conctrete Post
J 260	205,858.04	176,799.55	5,075.56	3-1/2" Bronze Bench Mark Disk Stamped "J 260 1938"
J 411	201,921.11	160,818.59	5,098.47	Stainless Steel Rod in 5" Logo Cap
L 260	220,197.61	184,012.92	5,034.96	3-1/2" Bronze Bench Mark Disk Stamped "L 260 1938" in top of 12" square concrete post.
RAMONA RESET	259,200.31	146,090.88	5,167.22	3-1/4" Brass Survey Mark Stamped "ROMONA RESET CITY AND COUNTY OF BROOMFIELD"
RODRIGUEZ	185,345.54	168,391.40	5,154.09	3 1/2" Brass Survey Mark with logo stamped "RODRIGUEZ 1995" set in concrete.
ROTELLA	184,788.35	149,906.50	5,195.91	3-1/4" Aluminum Survey Mark in 6" PVC pipe with logo cap Stamped "ROTELLA 1995""

COORDINATE DATUM: Project coordinates were adjusted from NAD 83 (2011) Colorado North Zone State Plane Coordinate System to the Modified Grid System using the following parameters:

Central Latitude: 39° 55'42.33480" North
Central Meridian: 104° 54'06.81837" West
Project Ellipsoid Height: 5,058.583 US Survey Feet(NAVD88)
False Northing: 1,000,000.000 US Survey Feet
False Easting: 3,000,000.000 US Survey Feet
Scale Factor: 0.99973075785093

Basis of Bearings: Bearings used in the calculations of coordinates are based on a grid bearing of S00° 44'44"E between points CP01 and CP06 which are both set #6 rebar with 2" aluminum cap and each being stamped: "AECOM CP01" and "AECOM CP06" respectively. The survey data was obtained from a Global Positioning System (GPS) survey based on NAD-1983(2011) Colorado North Zone (0501).

Basis of Elevations: Survey Control Diagram monument elevations are based on J 411, a found stainless steel rod in 5" logo cap located at the intersection of east 104th Ave and Riverdale road, 467.2 ft north of the centerline of the Ave, 121.1 ft east of the center of the road, and 1.0 ft east of the southeast corner of a chain link fence around a water pumping station., having a published elevation of 5,098.47 feet based on the North American Vertical Datum 1988 (NAVD88).

Project Coordinates are modified State Plane Coordinates in US Survey Feet. To convert Project coordinates to State Plane Coordinates, add the "Northing reduction", 1,000,000.000 ft and "Easting Reduction", 3,000,000.000 ft. Then subtract the seed coordinates of 1,217,340.184 ft in the Northing and 3,167,736.130 ft in the Easting. Multiply the resulting coordinates by the Combined Scale Factor 0.99973075785093. Then add the seed coordinates of 1,217,340.184 ft in the Northing and 3,167,736.130 ft in the Easting.

General Notes:

1.This Project Control is not a boundary survey of the adjoining property and is prepared for the City of Thornton purposes only.

2.This plan set is subject to change and may not be the most current set. It is the user's responsibility to verify with the City of Thornton that this set is the most current. The information contained on the attached drawing is not valid unless this copy bears an original signature of the Professional Land Surveyor hereon named.

NOTICE: According to Colorado law you must commence any legal action based upon any defect in this survey within three years after you first discover such defect. In no event may any action based upon any defect in this survey be commenced more than ten years from the date of the certification shown hereon.

SURVEYOR STATEMENT (SURVEY CONTROL)

I, Stan Vermilyea, a professional land surveyor licensed in the State of Colorado, do hereby state to the City of Thornton this Survey Control Diagram was prepared and the field survey it represents was performed under my responsible charge and, based upon my knowledge, information and belief is in accordance with applicable standards of practice. This statement is not a guaranty or warranty, either expressed or implied.

AECOM

Thornton WATER PROJECT

TWP SEG A, PHASE 1
PROJECT No. 12-777H5

CLIENT

CITY OF THORNTON
12450 WASHINGTON ST,
THORNTON, CO 80241
720.977.6700 tel 000.000.0000 fax
www.thorntonwaterproject.com

CONSULTANT

AECOM
7595 TECHNOLOGY WAY, STE 200
DENVER, CO 80237
T 303.694.2770 F 303.694.3946
www.aecom.com

ISSUE/REVISION

I/R	DATE	DESCRIPTION
E	10/15/2021	PRE-FINAL SUBMITTAL
C	04/27/2021	75% SUBMITTAL
B	09/25/2020	35% FINAL SUBMITTAL
A	04/21/2020	35% SUBMITTAL

VERIFIED SCALES

BAR IS ONE INCH ON ORIGINAL DRAWING
0 1"
IF NOT ONE INCH ON THIS SHEET, ADJUST SCALES ACCORDINGLY

DRAWN BY:	MJEC
CHKD BY:	MG
CHKD BY:	CAT
APPD BY:	WEW

PROJECT NUMBER

60619101

SHEET TITLE

PROJECT CONTROL DIAGRAM

SHEET NUMBER

G006

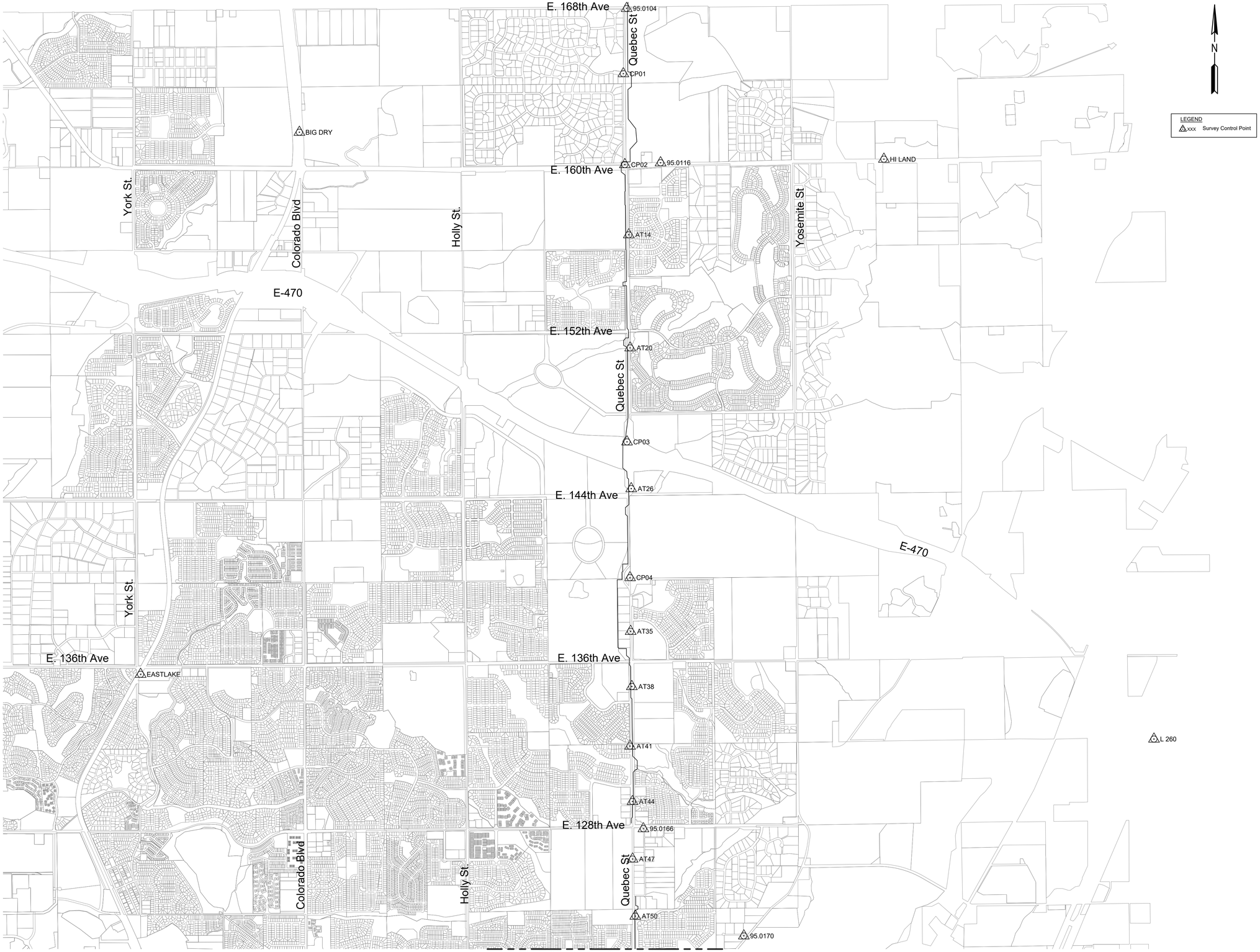

AECOM

Thornton WATER PROJECT

TWP SEG A, PHASE 1
PROJECT No. 12-777H5

CLIENT

CITY OF THORNTON
12450 WASHINGTON ST,
THORNTON, CO 80241
720.977.6700 tel 000.000.0000 fax
www.thorntonwaterproject.com

CONSULTANT

AECOM
7595 TECHNOLOGY WAY, STE 200
DENVER, CO 80237
T 303.694.2770 F 303.694.3946
www.aecom.com

ISSUE/REVISION

I/R	DATE	DESCRIPTION
E	10/15/2021	PRE-FINAL SUBMITTAL
C	04/27/2021	75% SUBMITTAL
B	09/25/2020	35% FINAL SUBMITTAL
A	04/21/2020	35% SUBMITTAL

VERIFIED SCALES

BAR IS ONE INCH ON ORIGINAL DRAWING
0 1"
IF NOT ONE INCH ON THIS SHEET, ADJUST SCALES ACCORDINGLY

DRAWN BY:	JEM/JEC
CHKD BY:	MG
CHKD BY:	CAT
APPD BY:	WEW

PROJECT NUMBER

60619101

SHEET TITLE

PROJECT CONTROL DIAGRAM

SHEET NUMBER

G007

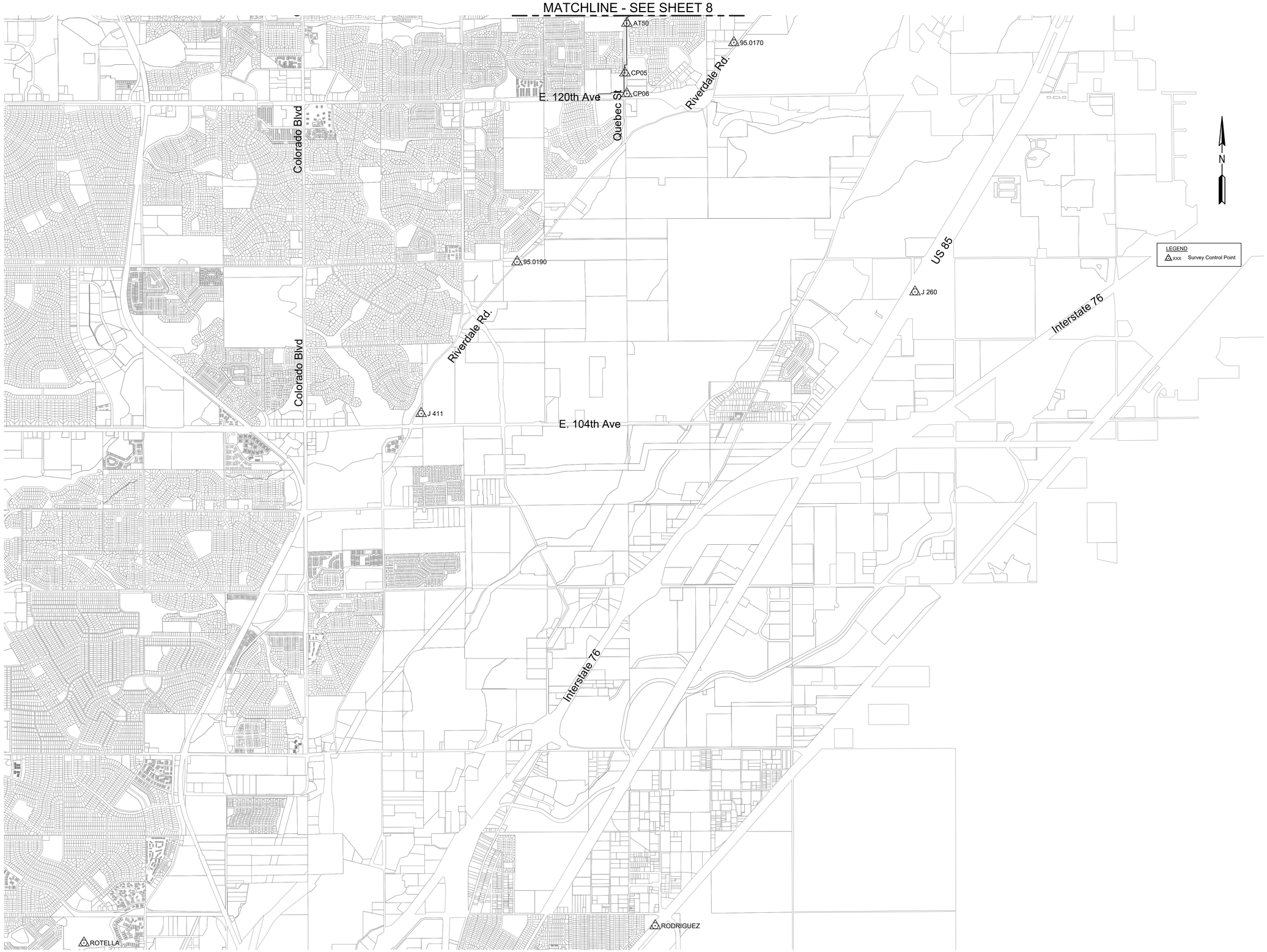

c:\pwworking\aecom_ds20_na_2019\stephen.muller@aecom.com\d0104131\G-03-SRVY-CNTRL.dwg

AECOM

Thornton WATER PROJECT

TWP SEG A, PHASE 1
PROJECT No. 12-777H5

CLIENT

CITY OF THORNTON
12450 WASHINGTON ST,
THORNTON, CO 80241
720.977.6700 tel 000.000.0000 fax
www.thorntonwaterproject.com

CONSULTANT

AECOM
7595 TECHNOLOGY WAY, STE 200
DENVER, CO 80237
T 303.694.2770 F 303.694.3946
www.aecom.com

ISSUE/REVISION

I/R	DATE	DESCRIPTION
E	10/15/2021	PRE-FINAL SUBMITTAL
C	04/27/2021	75% SUBMITTAL
B	09/25/2020	35% FINAL SUBMITTAL
A	04/21/2020	35% SUBMITTAL

VERIFIED SCALES

BAR IS ONE INCH ON ORIGINAL DRAWING
0 1"
IF NOT ONE INCH ON THIS SHEET, ADJUST SCALES ACCORDINGLY

DRAWN BY:	*MJEC*
CHKD BY:	*MG*
CHKD BY:	*CAT*
APPD BY:	*WEW*

PROJECT NUMBER

60619101

SHEET TITLE

PROJECT CONTROL DIAGRAM

SHEET NUMBER

G008

AECOM

Thornton WATER PROJECT

TWP SEG A, PHASE 1
PROJECT No. 12-777H5

CLIENT

CITY OF THORNTON
12450 WASHINGTON ST,
THORNTON, CO 80241
720.977.6700 tel 000.000.0000 fax
www.thorntonwaterproject.com

CONSULTANT

AECOM
7595 TECHNOLOGY WAY, STE 200
DENVER, CO 80237
T 303.694.2770 F 303.694.3946
www.aecom.com

ISSUE/REVISION

I/R	DATE	DESCRIPTION
E	10/15/2021	PRE-FINAL SUBMITTAL
C	04/27/2021	75% SUBMITTAL
B	09/25/2020	35% FINAL SUBMITTAL
A	04/21/2020	35% SUBMITTAL

VERIFIED SCALES

BAR IS ONE INCH ON ORIGINAL DRAWING
0 1"
IF NOT ONE INCH ON THIS SHEET, ADJUST SCALES ACCORDINGLY

DRAWN BY:	MJM/JEC
CHKD BY:	MG
CHKD BY:	CAT
APPD BY:	WEW

PROJECT NUMBER

60619101

SHEET TITLE

LAND SURVEY
CONTROL DIAGRAM

SHEET NUMBER

G015 16 OF 216

c:\pwworking\aecom_ds20_na_2019\stephen.muller@aecom.com\d0157239\19101ROW_LSCD.dwg

c:\pwworking\aecom_ds20_na_2019\stephen.muller@aecom.com\d0157239\19101ROW_LSCD.dwg

AECOM

Thornton WATER PROJECT

TWP SEG A, PHASE 1
PROJECT No. 12-777H5

CLIENT

CITY OF THORNTON
12450 WASHINGTON ST,
THORNTON, CO 80241
720.977.6700 tel 000.000.0000 fax
www.thorntonwaterproject.com

CONSULTANT

AECOM
7595 TECHNOLOGY WAY, STE 200
DENVER, CO 80237
T 303.694.2770 F 303.694.3946
www.aecom.com

ISSUE/REVISION

I/R	DATE	DESCRIPTION
E	10/15/2021	PRE-FINAL SUBMITTAL
C	04/27/2021	75% SUBMITTAL
B	09/25/2020	35% FINAL SUBMITTAL
A	04/21/2020	35% SUBMITTAL

VERIFIED SCALES

BAR IS ONE INCH ON ORIGINAL DRAWING
0 1"
IF NOT ONE INCH ON THIS SHEET, ADJUST SCALES ACCORDINGLY

DRAWN BY:	SHM/JEC
CHKD BY:	MG
CHKD BY:	CAT
APPD BY:	WEW

PROJECT NUMBER

60619101

SHEET TITLE

LAND SURVEY
CONTROL DIAGRAM

SHEET NUMBER

G014

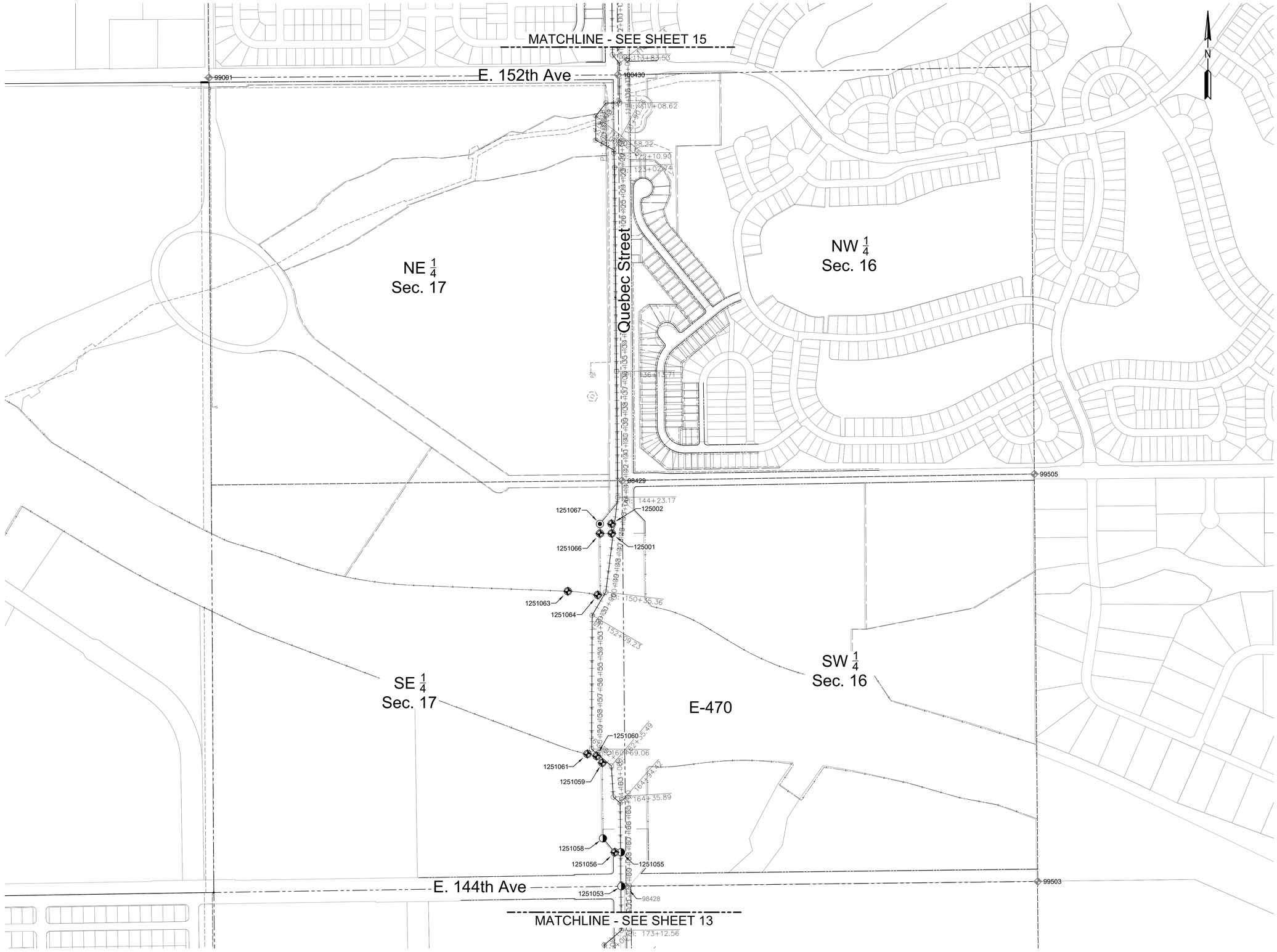

c:\pwworking\aecom_ds20_na_2019\stephen.muller@aecom.com\d0157239\19101ROW_LSCD.dwg

AECOM

Thornton WATER PROJECT

TWP SEG A, PHASE 1
PROJECT No. 12-777H5

CLIENT

CITY OF THORNTON
12450 WASHINGTON ST,
THORNTON, CO 80241
720.977.6700 tel 000.000.0000 fax
www.thorntonwaterproject.com

CONSULTANT

AECOM
7595 TECHNOLOGY WAY, STE 200
DENVER, CO 80237
T 303.694.2770 F 303.694.3946
www.aecom.com

ISSUE/REVISION

I/R	DATE	DESCRIPTION
E	10/15/2021	PRE-FINAL SUBMITTAL
C	04/27/2021	75% SUBMITTAL
B	09/25/2020	35% FINAL SUBMITTAL
A	04/21/2020	35% SUBMITTAL

VERIFIED SCALES

BAR IS ONE INCH ON ORIGINAL DRAWING
0 1"
IF NOT ONE INCH ON THIS SHEET, ADJUST SCALES ACCORDINGLY

DRAWN BY:	JEM/JEC
CHKD BY:	MG
CHKD BY:	CAT
APPD BY:	WEW

PROJECT NUMBER

60619101

SHEET TITLE

LAND SURVEY
CONTROL DIAGRAM

SHEET NUMBER

G013

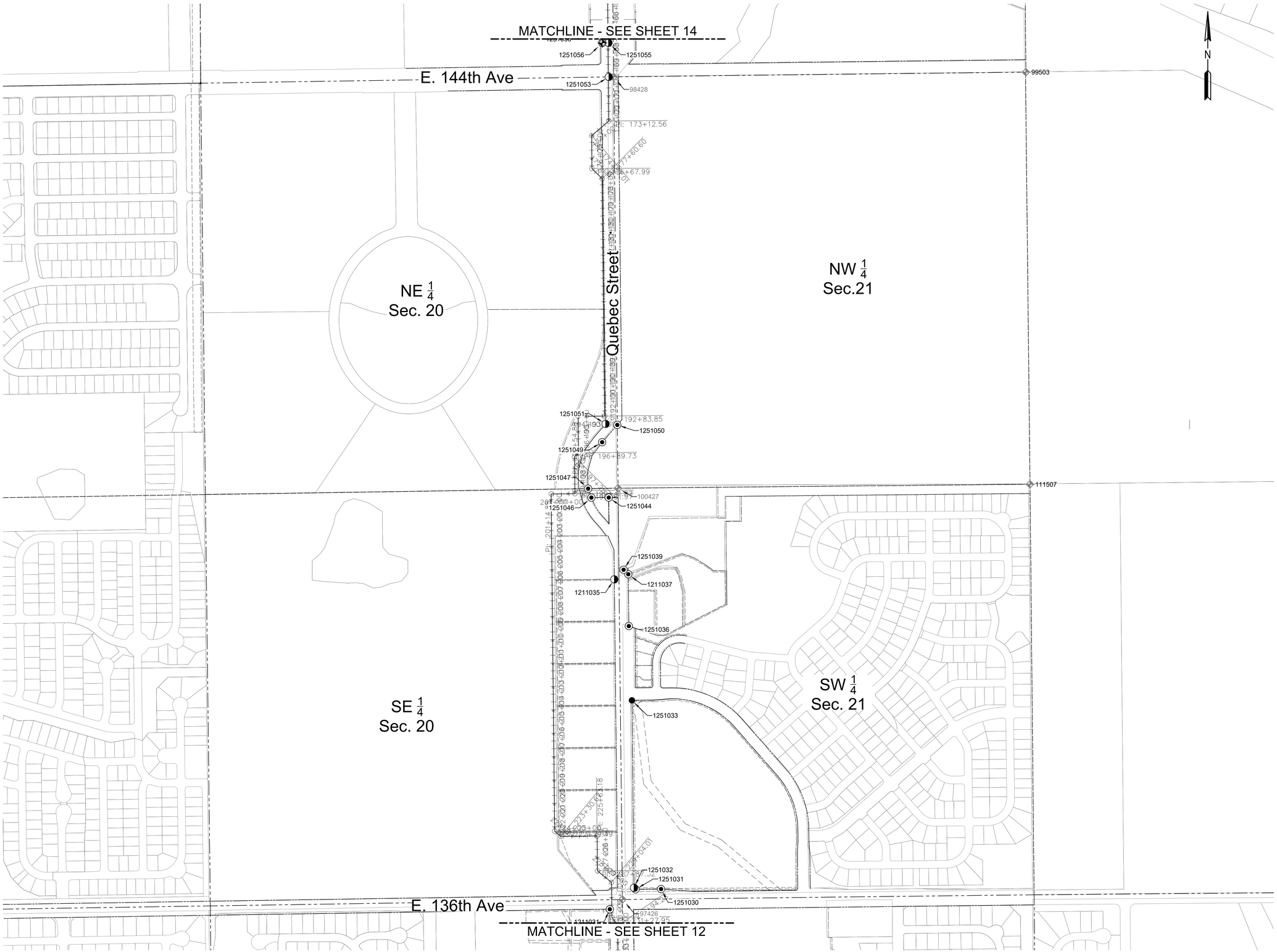

c:\pwworking\aecom_ds20_na_2019\stephen.muller@aecom.com\d0157239\19101ROW_LSCD.dwg

AECOM

Thornton WATER PROJECT

TWP SEG A, PHASE 1
PROJECT No. 12-777H5

CLIENT

CITY OF THORNTON
12450 WASHINGTON ST,
THORNTON, CO 80241
720.977.6700 tel 000.000.0000 fax
www.thorntonwaterproject.com

CONSULTANT

AECOM
7595 TECHNOLOGY WAY, STE 200
DENVER, CO 80237
T 303.694.2770 F 303.694.3946
www.aecom.com

ISSUE/REVISION

I/R	DATE	DESCRIPTION
E	10/15/2021	PRE-FINAL SUBMITTAL
C	04/27/2021	75% SUBMITTAL
B	09/25/2020	35% FINAL SUBMITTAL
A	04/21/2020	35% SUBMITTAL

VERIFIED SCALES

BAR IS ONE INCH ON original DRAWING
0 1"
IF NOT ONE INCH ON THIS SHEET, ADJUST SCALES ACCORDINGLY

DRAWN BY:	SEM/JEC
CHKD BY:	MG
CHKD BY:	CAT
APPD BY:	WEW

PROJECT NUMBER

60619101

SHEET TITLE

LAND SURVEY
CONTROL DIAGRAM

SHEET NUMBER

G012

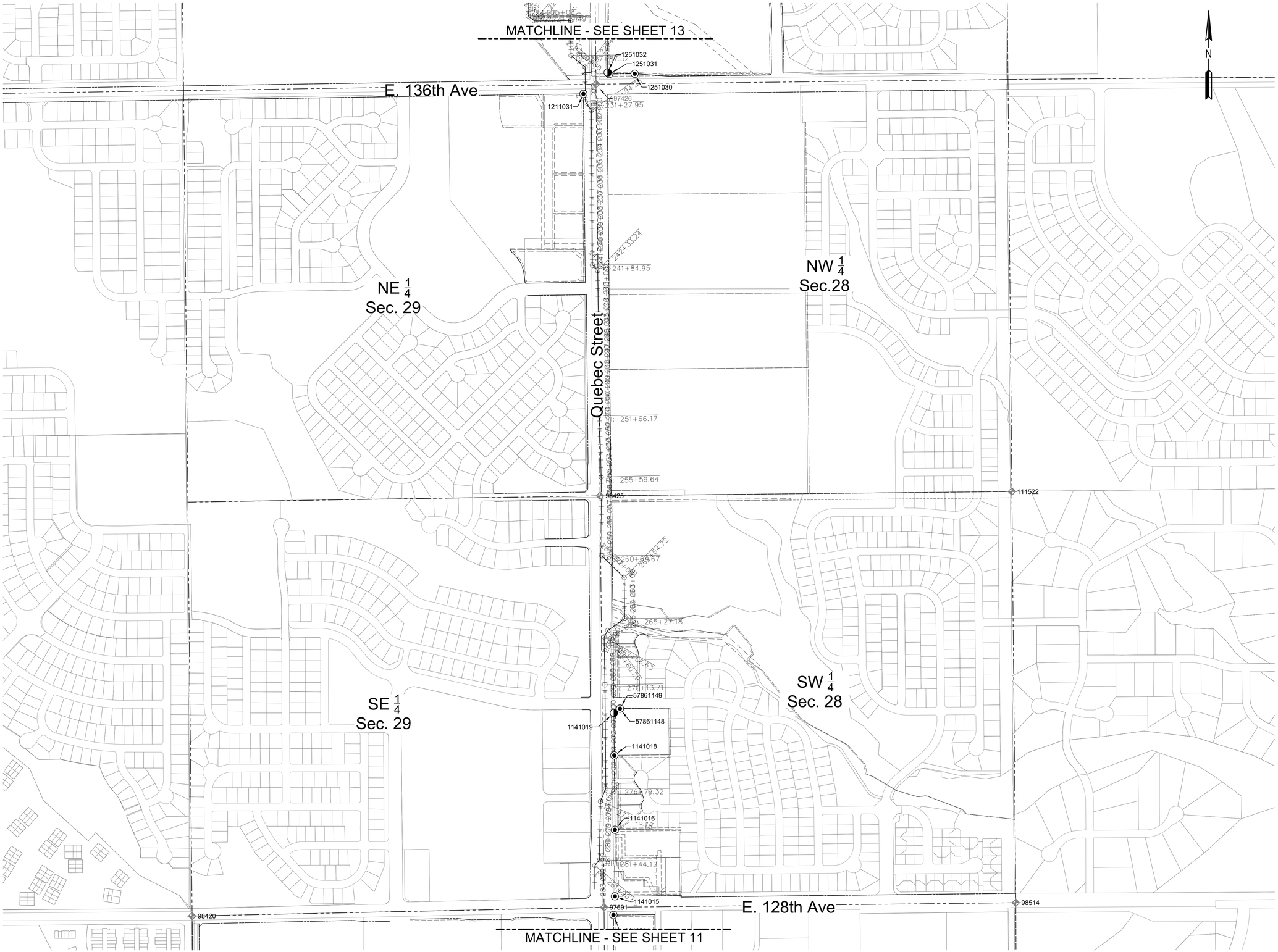

c:\pwworking\aecom_ds20_na_2019\stephen.muller@aecom.com\d0157239\19101ROW_LSCD.dwg

AECOM

Thornton WATER PROJECT

TWP SEG A, PHASE 1
PROJECT No. 12-777H5

CLIENT

CITY OF THORNTON
12450 WASHINGTON ST,
THORNTON, CO 80241
720.977.6700 tel 000.000.0000 fax
www.thorntonwaterproject.com

CONSULTANT

AECOM
7595 TECHNOLOGY WAY, STE 200
DENVER, CO 80237
T 303.694.2770 F 303.694.3946
www.aecom.com

ISSUE/REVISION

I/R	DATE	DESCRIPTION
E	10/15/2021	PRE-FINAL SUBMITTAL
C	04/27/2021	75% SUBMITTAL
B	09/25/2020	35% FINAL SUBMITTAL
A	04/21/2020	35% SUBMITTAL

VERIFIED SCALES

BAR IS ONE INCH ON ORIGINAL DRAWING
0 1"
IF NOT ONE INCH ON THIS SHEET, ADJUST SCALES ACCORDINGLY

DRAWN BY:	JEM/JEC
CHKD BY:	MG
CHKD BY:	CAT
APPD BY:	WEW

PROJECT NUMBER

60619101

SHEET TITLE

LAND SURVEY
CONTROL DIAGRAM

SHEET NUMBER

G011

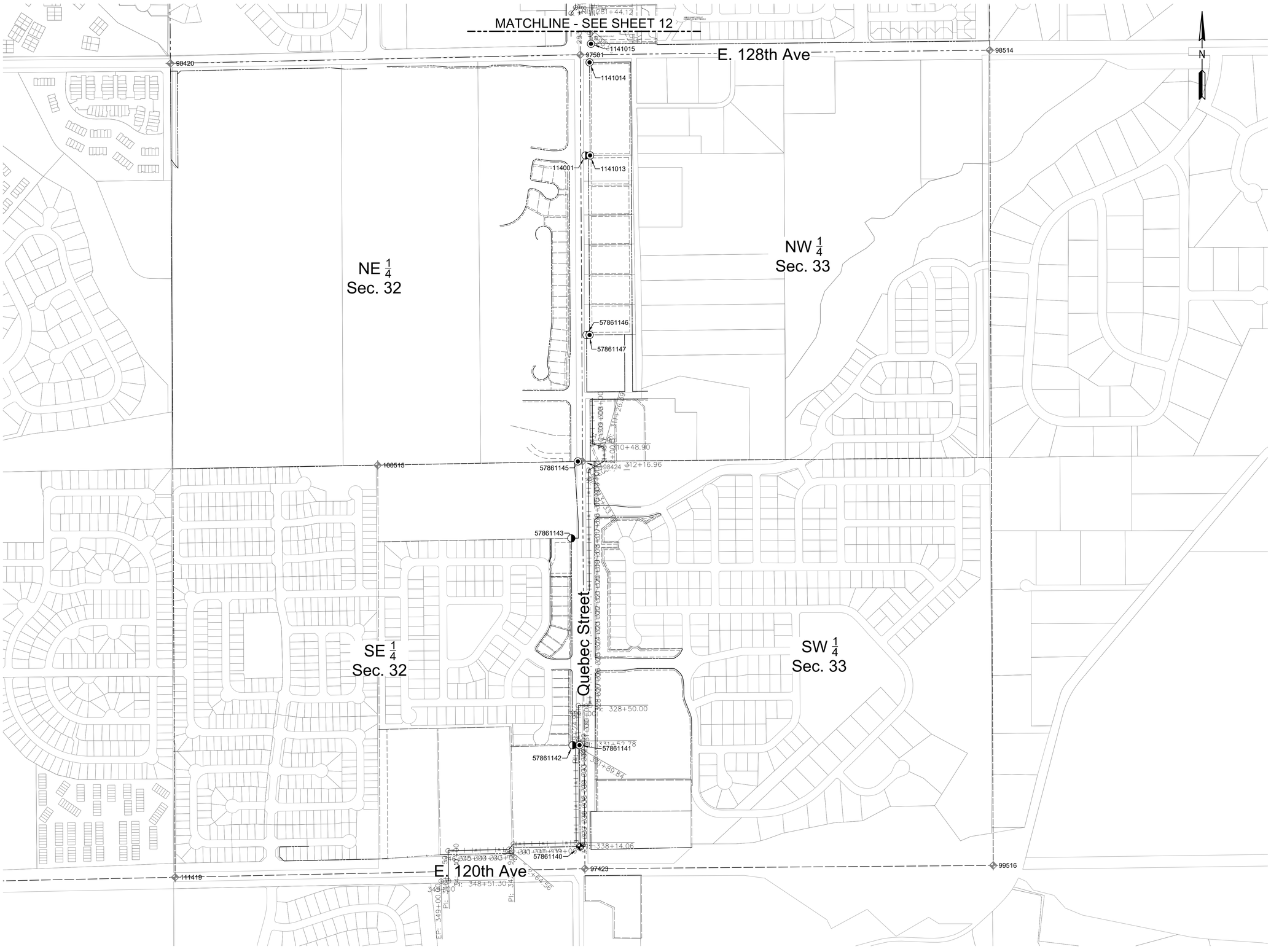

AECOM

Thornton WATER PROJECT

TWP SEG A, PHASE 1
PROJECT No. 12-777H5

CLIENT

CITY OF THORNTON
12450 WASHINGTON ST,
THORNTON, CO 80241
720.977.6700 tel 000.000.0000 fax
www.thorntonwaterproject.com

CONSULTANT

AECOM
7595 TECHNOLOGY WAY, STE 200
DENVER, CO 80237
T 303.694.2770 F 303.694.3946
www.aecom.com

ISSUE/REVISION

I/R	DATE	DESCRIPTION
E	10/15/2021	PRE-FINAL SUBMITTAL
C	04/27/2021	75% SUBMITTAL
B	09/25/2020	35% FINAL SUBMITTAL
A	04/21/2020	35% SUBMITTAL

VERIFIED SCALES

BAR IS ONE INCH ON ORIGINAL DRAWING
0 1"
IF NOT ONE INCH ON THIS SHEET, ADJUST SCALES ACCORDINGLY

DRAWN BY:	MJ/JEC
CHKD BY:	MG
CHKD BY:	CAT
APPD BY:	WEW

PROJECT NUMBER

60619101

SHEET TITLE

LAND SURVEY
CONTROL DIAGRAM

SHEET NUMBER

G010

ALIQUOT CORNERS PROJECT COORDINATE TABLE

Point No.	Project Coordinates Northing(ft)	Easting(ft)	Description
97001	222,728.44	172,638.89	FND 3-1/4" ALUMINUM CAP IN A MONUMENT BOX STAMPED "FALCON SURVEYING INC T1S R67W S21 S22 S28 S27 2019 PLS 34183"
97410	212,039.83	162,157.58	FND 2-1/2" ALUMINUM CAP STAMPED "T1S R67W S31 S32 S6 S5 T2S 2010 PLS 27936"
97423	212,150.04	167,439.33	FND 3-1/4" ALUMINUM CAP IN A MONUMENT BOX STAMPED "???? DEPT OF TRANSPORTATION T1S R67W S?2 S33 ?5 S4 T2S R68W 2006 PLS NO 36053"
97426	222,675.64	167,357.66	FND 2 1/2" ALUMINUM CAP STAMPED "PETROLEUM ?IELD SER???ES T1S R67? S? S? S29 S2? 20?? PLS ?????"
97431	238,456.12	167,194.23	FND 3" BRASS CAP IN A MONUMENT BOX STAMPING ILLEGIBLE
97501	217,396.77	167,409.26	FND 3-1/4" ALUMINUM CAP IN A MONUMENT BOX STAMPING ILLEGIBLE
97511	222,593.72	162,069.87	FND 3-1/4" ALUMINUM CAP IN A MONUMENT BOX STAMPED "MERRICK & CO ??? R67W ??? S20 S30 S29 2014 PLS 33208"
98420	217,341.07	164,768.51	FND 3-1/4" ALUMINUM CAP IN A MONUMENT BOX STAMPED "BAYE????? SSOC 1/4 ?1S R6?? S? 1995 PLS ?????"
98424	214,775.75	167,424.14	FND 3-1/4" ALUMINUM CAP IN A MONUMENT BOX STAMPED "?1S R67W 1/4 S32 S33 2006 PLS 35593"
98425	220,036.18	167,383.44	FND 3-1/4" ALUMINUM CAP IN A MONUMENT BOX STAMPED "PETROLEUM FIELD SERVICES T1S R67W 1/4 S29 S28 2015 PLS 38304"
98428	227,954.90	167,300.61	FND 3-1/4" ALUMINUM CAP IN A MONUMENT BOX STAMPED "W.S.S.I. R67W S17 ?16 S20 S21 199? PLS 2?96?"
98500	241,092.50	167,170.76	FND 3-1/4" ALUMINUM CAP IN A MONUMENT BOX MOSTLY ILLEGIBLE STAMPED "PLS 3?8??"
98514	217,426.27	170,048.74	FND 3-1/4" ALUMINUM CAP IN A MONUMENT BOX MOSTLY ILLEGIBLE STAMPED "??? DEVEL???? ???VEY MONU?????"
98429	230,561.05	167,274.68	FND 3-1/4" ALUMINUM CAP STAMPED "MANHARD CONSULTING T1S R67W 1/4 S17 S16 2015 PLS 38445"
99503	227,985.17	169,945.91	FND 3-1/4" ALUMINUM CAP STAMPED "BAYER ASSOC INC T1S R67W 1/4 S16 S21 1997 PLS 6973"
99505	230,603.27	169,923.62	FND 2-1/2" ALUMINUM CAP STAMPED "T1S R67W C 1/4 S16 2015 PLS 25965"
99001	233,150.42	164,620.83	FND 3-1/4" ALUMINUM CAP STAMPED "W.S.S.I. T1S R67W 1/4 S8 S? 1990 PLS ?????"
99002	225,233.46	162,036.93	FND 3-1/4" ALUMINUM CAP IN A MONUMENT BOX STAMPED "PETROLEUM FIELD SERVICES 1/4 S19 S20 2015 PLS 38304"
99413	227,873.66	162,003.59	FND 3-1/4" ALUMINUM CAP IN A MONUMENT BOX STAMPED "AZTEC CONSULTANTS INC T1S R67W S18 S17 S19 S20 2017 PLS 38256"
99432	243,542.52	167,152.01	FND #6 REBAR NO CAP IN A MONUMENT BOX
99504	235,792.22	164,594.99	FND 3-1/4" ALUMINUM CAP STAMPED "T1S R67W C 1/4 S8 2000 LS 23???"
99516	212,171.15	170,071.44	FND 3-1/4" ALUMINUM CAP IN A MONUMENT BOX STAMPED "COLO DEPT OF TRANSPORTATION T1S R67W 1/4 S33 S4 T2S R68W 2006 PLS NO 36053"
100510	238,488.79	169,847.44	FND 3" BRASS CAP SET IN CONCRETE STAMPED ". 7"
100422	238,429.90	164,569.53	FND 3-1/4" ALUMINUM CAP STAMPED "BAYER ASSOC INC T1S R67W 1/4 S5 S8 1995 PLS 6973"
100427	225,315.15	167,329.28	FND 3-1/4" ALUMINUM CAP STAMPED "T1S R67W S20 S21 1/4 1998 LS 7361"
100430	233,167.54	167,248.50	FND 3-1/4" ALUMINUM CAP IN A MONUMENT BOX STAMPED "MANHARD CONSULTING T1S R67W S8 S9 S17 S16 2015 PLS 38445"
100501	235,811.61	167,191.67	FND 2-1/2" ALUMINUM CAP STAMPED "PLS 28285 T1S R67W 1/4 S8 S9 WC → 30' 2014"
100515	214,751.07	166,103.90	FND 3-1/4" ALUMINUM CAP STAMPED "T1S R67W 1/16 C-C S32 1999 PLS 23521"
111419	212,094.84	164,798.15	FND 3-1/4" ALUMINUM CAP STAMPED "COLO DEPT OF TRANSPORTATION T1S R67W S32 S5 T2S 2010 PLS NO 27936"
111507	225,340.51	169,972.39	FND 3-1/4" ALUMINUM CAP STAMPED "W.S.S.I. T1S R67W C 1/4 S21 1999 PLS 24960"
111522	220,063.62	170,023.29	FND 3-1/4" ALUMINUM CAP STAMPED "R. W. BAYER ASSOC T1S R67W C 1/4 S28 1994 PLS 6973"
111434	243,563.95	169,808.32	FND 2" ALUMINUM CAP IN A MONUMENT BOX STAMPING ILLEGIBLE

PROPERTY CORNERS PROJECT COORDINATE TABLE

Point No.	Project Coordinates Northing(ft)	Easting(ft)	Description
57861142	212,945.50	167,359.66	FND #5 REBAR WITH PINK FLAGGING NO CAP
57861143	214,279.83	167,352.00	FND #5 REBAR NO CAP DISTURBED SHOT AT SPIN POINT
57861145	214,775.18	167,394.17	FND #5 REBAR WITH 1-1/4" YELLOW PLASTIC CAP STAMPED "PLS 25965"
57861146	215,590.31	167,449.46	FND #3 REBAR WITH PINK FLAGGING NO CAP
57861147	215,590.51	167,469.49	FND #5 REBAR WITH 1-1/4" RED PLASTIC CAP STAMPED "???? LS 691?"
57861148	218,671.50	167,511.03	FND 1-1/4" ORANGE PLASTIC CAP STAMPED "LS 28286"
57861149	218,671.11	167,511.04	FND #5 REBAR WITH 1-1/4" ORANGE PLASTIC CAP STAMPED "LS 28286"
1211031	222,613.28	167,276.73	FND #5 REBAR WITH ORANGE PLASTIC CAP STAMPED "LS 38069"
1211035	224,730.00	167,305.79	FND #5 REBAR WITH NO CAP
1211037	224,762.96	167,395.38	FND #4 REBAR WITH YELLOW PLASTIC CAP STAMPED "BAYER LS 6973"
125001	230,221.41	167,208.09	FND 2-1/2" ALUMINUM CAP STAMPED "E-470 PUBLIC HIGHWAY AUTHORITY RIGHT OF WAY PLS 24960 8006"
125002	230,283.10	167,207.36	FND 2-1/2" ALUMINUM CAP STAMPED "E-470 PUBLIC HIGHWAY AUTHORITY RIGHT OF WAY PLS 24960 3195"
1251030	222,742.70	167,605.56	FND #5 REBAR WITH 1-1/4" ORANGE PLASTIC CAP STAMPED "LS 28286"
1251031	222,741.17	167,441.70	FND #5 REBAR WITH DAMAGED RED PLASTIC CAP STAMPING ILLEGIBLE
1251032	222,750.94	167,432.08	FND #5 REBAR WITH NO CAP
1251033	223,953.73	167,418.72	FND 1" ALUMINUM WASHER WITH A MAG NAIL STAMPED "AZTEC PL??????"
1251036	224,430.28	167,398.70	FND #4 REBAR WITH A 3/4" YELLOW PLASTIC CAP STAMPED "BAYER LS 6973"
1251039	224,791.72	167,364.97	FND #4 REBAR WITH YELLOW PLASTIC CAP ILLEGIBLE
1251044	225,254.85	167,269.91	FND #5 REBAR WITH WHITE PLASTIC CAP ILLEGIBLE
1251046	225,254.80	167,158.46	FND #5 REBAR WITH YELLOW PLASTIC CAP STAMPED "CSA 29766 EASE COR"
1251047	225,312.28	167,137.82	FND #5 REBAR WITH ORANGE PLASTIC CAP STAMPED "PLS 28286"
1251049	225,610.31	167,227.46	FND #5 REBAR WITH ORANGE PLASTIC CAP STAMPED "LS 28286"
1251050	225,721.21	167,324.59	FND #5 REBAR WITH ORANGE PLASTIC CAP STAMPED "LS 28286"
1251051	225,727.64	167,249.73	FND #4 REBAR WITH NO CAP
1251053	227,954.45	167,270.64	FND #5 REBAR WITH NO CAP
1251055	228,172.90	167,268.39	FND #5 REBAR WITH NO CAP DISTURBED SHOT AT SPIN POINT
1251056	228,172.59	167,228.43	FND 2-1/2" ALUMINUM CAP STAMPED "E-470 PUBLIC HIGHWAY AUTHORITY RIGHT OF WAY PLS 24960 3815"
1251058	228,261.97	167,152.17	FND #5 REBAR WITH NO CAP
1251059	228,747.77	167,147.73	FND 2-1/2" ALUMINUM CAP STAMPED "E-470 PUBLIC HIGHWAY AUTHORITY RIGHT OF WAY PLS 24960 5164"
1251060	228,791.45	167,111.91	FND 2-1/2" ALUMINUM CAP STAMPED "E-470 PUBLIC HIGHWAY AUTHORITY RIGHT OF WAY 5165 PLS 37070"
1251061	228,804.09	167,052.04	FND 2-1/2" ALUMINUM CAP STAMPED "E-470 PUBLIC HIGHWAY AUTHORITY RIGHT OF WAY PLS 24960 5166"
1251063	229,849.94	166,926.28	FND 2-1/2" ALUMINUM CAP STAMPED "E-470 PUBLIC HIGHWAY AUTHORITY RIGHT OF WAY PLS 24960 5191"
1251064	229,825.89	167,118.44	FND 2-1/2" ALUMINUM CAP STAMPED "E-470 PUBLIC HIGHWAY AUTHORITY RIGHT OF WAY PLS 24960 5169"
1251066	230,220.72	167,133.13	FND 2-1/2" ALUMINUM CAP STAMPED "E-470 PUBLIC HIGHWAY AUTHORITY RIGHT OF WAY PLS 24960 5823"
1251067	230,282.49	167,132.53	FND #4 REBAR WITH 1-1/4" YELLOW PLASTIC CAP STAMPED "PLS 25965"
1251074	235,808.06	167,171.77	FND #5 REBAR WITH YELLOW PLASTIC CAP STAMPED "PLS 28285 CO"
1251074-2	235,831.67	167,181.81	FND #5 REBAR WITH YELLOW PLASTIC CAP STAMPED "PLS 28285 CO"
1251089	238,509.08	167,223.65	FND #5 REBAR WITH 1" BLUE PLASTIC CAP STAMPED "LAT 40 LS 38175"
127001	243,481.66	167,052.50	FND #5 REBAR WITH A YELLOW PLASTIC CAP STAMPED "R.W. BAYER LS 6973"
127002	243,452.03	167,082.71	FND #5 REBAR WITH WHITE PLASTIC CAP STAMPED "AAI PLS 23027"
127003	242,147.89	167,092.84	FND #5 REBAR WITH YELLOW PLASTIC CAP STAMPED "AAI PLS 28283"
127004	241,006.85	167,061.79	FND #5 REBAR WITH FLAGGING NO CAP
127005	240,795.78	167,063.63	FND #5 REBAR WITH FLAGGING NO CAP
1271082	241,091.45	167,101.03	FND 60d NAIL WITH FLAGGING
1271086	241,469.62	167,084.26	FND 60d NAIL WITH FLAGGING
1271094	243,523.87	168,478.82	FND #4 REBAR WITH NO CAP

SURVEYOR STATEMENT (SURVEY CONTROL)

I, Stan Vermilyea, a professional land surveyor licensed in the State of Colorado, do hereby state to the City of Thornton this Survey Control Diagram was prepared and the field survey it represents was performed under my responsible charge and, based upon my knowledge, information and belief is in accordance with applicable standards of practice This statement is not a guaranty or warranty, either expressed or implied.

AECOM

Thornton WATER PROJECT

TWP SEG A, PHASE 1
PROJECT No. 12-777H5

CLIENT

CITY OF THORNTON
12450 WASHINGTON ST,
THORNTON, CO 80241
720.977.6700 tel 000.000.0000 fax
www.thorntonwaterproject.com

CONSULTANT

AECOM
7595 TECHNOLOGY WAY, STE 200
DENVER, CO 80237
T 303.694.2770 F 303.694.3946
www.aecom.com

ISSUE/REVISION

I/R	DATE	DESCRIPTION
E	10/15/2021	PRE-FINAL SUBMITTAL
C	04/27/2021	75% SUBMITTAL
B	09/25/2020	35% FINAL SUBMITTAL
A	04/21/2020	35% SUBMITTAL

VERIFIED SCALES

BAR IS ONE INCH ON ORIGINAL DRAWING
0 1"
IF NOT ONE INCH ON THIS SHEET, ADJUST SCALES ACCORDINGLY

DRAWN BY:	SEM/JEC
CHKD BY:	MG
CHKD BY:	CAT
APPD BY:	WEW

PROJECT NUMBER

60619101

SHEET TITLE

LAND SURVEY
CONTROL DIAGRAM

SHEET NUMBER

G009

PROPERTY OWNER CONTACT:

Tier	Easement ID	Shown on Drawing No.	Property Owner	Assessor's Parcel Number
1	T1-1 TE/PE T1-1A TE/PE T1-1B TE/PE	DR01 - DR03	ERN Limited Partnership, CHAS-MAR PARTNERS, LLLP, HIGHLAND REALTY CORP., MARY V. PETERSON TRUST 7 Circle Dr. Wheat Ridge, CO 80215 Bob Zarlengo	0157104200003; 0157104200002
1	T1-2 TE/PE T1-2A TE	DR03	Todd Creek Village Park and Recreation District 1700 N. Lincoln St. Ste 2000 Denver, CO 80203 Russ Dykstra	0157105404044
2	T2-1 TE/PE T2-1A TE	DR03 - DR04	Quebec 7 LLC 14642 Stellas Meadow Drive Broomfield, CO 80023 Mark/Mike Stonehocker	0157108000004
2	T2-2 TE	DR04 - DR05	Talon Pointe Land LLC 10450 E. 159th Ct. Brighton, CO 80602 George Hanlon	0157108403067; 0157108403068
3, 4	T3-1 TE/PE T3-2 TE/PE T3-3 TE /PE T3-3A TE T4-1 TE/PE	DR05 - DR08	HT Parterre Land LP 1144 15th St. STE 3675 Denver, CO 80202 Richard Cross	0157117101001; 0157117101002; 0157117101004; 0157117101003; 0157117401001; 0157117104001; 0157117402002
4	T4-3 TE/PE	DR09 - DR10	Janet Shaffer/John L. Aylor Trust 13671 Quebec St. Thornton, CO 80602	0157120001007
5	T5-1 TE/PE	DR10	Stratus Amber Creek LLC 1842 Montane Dr. E Golden, CO 80401	0157129113120
5	T5-3 TE/PE	DR11	Villages at Riverdale HOA c/o Colorado Management and Assoc. Central Place 1 13900 East Harvard Ave, Ste 330 Aurora, CO 80014	0157128301045; 0157128301046; 0157128301051
6	T6-8 TE/PE	DR13	Danny Fitts/Frances Shepherd 12402 Quince St. Brighton, CO 80602	0157133010001
6	T6-9 TE/PE	DR13	King Ranch Estates Filing No 1 Owners Association c/oMSI LLC 11002 Benton St. Westminster, CO 80020 Amanda Kovinchick	0157133315001
6	T6-10 TE/PE	DR14	Estate of America Bishard c/o Glen Bishard 2845 C1/2 Road Grand Junction, CO 81501	0157132400009
6	T6-11 TE/PE	DR14 - DR15	Buttercup Properties, LLC 1060 S. University Blvd Denver, CO 80209 Michael McClendon	0157132400008
7	T7-1 TE/PE	DR15	Century at Mayfield 8390 E. Crescent Pkwy Ste 650 Greenwood Village, CO 80111	0172105101044

NOTE: FOR ADDITIONAL PROPERTY OWNER INFORMATION AND CONSTRAINTS, SEE APPENDIX XX IN PROJECT MANUAL.

DITCH CONTACTS:

Ditch Name	Location	Contact	Permit / License Agreement Required?	Requirements
Signal Ditch	160th & Quebec Dwg. No. PP05	Brice Steele -303-659-3171	YES; Permit application in progress	Crossing must be at least 6' below the invert of the ditch. If crossing is to be bored, bore pits must be at least 25' from the edge of bank of the ditch. No open cuts are allowed between March 1st and November 15th (Signal Ditch irrigation season). Open cut construction near Signal Ditch during irrigation season needs to be at least 25' from the edge of bank of the ditch.
Smith Reservoir drainage / Todd Creek Tributary	North of 152nd & Quebec Dwg. No. PP10	Todd Creek Village Metropolitan District: Don Summers: 720.373.7373	NO	Coordination with Todd Creek Metro on approval of plans. No irrigation use.
Todd Creek Inlet	South of 152nd & Quebec Dwg. No. PP12	Todd Creek Village Metropolitan District: Don Summers: 720.373.7373	NO	Todd Creek Inlet irrigation season is March 1 - Sept 30, open cut is allowable outside that time frame. If crossing is open-cut, install clay liner.
Lee Lateral	138th & Quebec Dwg. No. PP20		NO	No crossing, Contractor to maintain ditch flow at all times. See SWMP Plans.
Brantner Gulch	Quebec & 124th Dwg. No. PP32	Jurisdictional area; no ditch company. Possibly USACE.	Peding Jurisdictional Determination with USACE	

ESTIMATED QUANTITIES:

ID	DESCRIPTION	UNIT	QTY
1	Mobilization, Demobilization and General Conditions	LS	1
2	Traffic Control	LS	1
3	Owner's Field Offices	Month	78
4a	Sedimentation and Erosion Control - Construction to Initial Acceptance (*see Note 1*)	LS	1
4b	Sedimentation and Erosion Control - Initial Acceptance to Final Acceptance	Month	12
5	Clearing and Grubbing	LS	1
6	Trench Stabilization Material	TON	842
7	42-Inch Welded Steel Waterline and Appurtenances - Open Cut	LF	30,791
8	CLSM Backfill at Open-Cut Trenches	CY	2,493
9a	42-Inch Welded Steel Waterline and Appurtenances - Open Cut with Casing at Signal Ditch	LF	100
9b	42-Inch Welded Steel Waterline and Appurtenances - Open Cut with Casing at Unnamed Floodplain S. of E-470	LF	100
10a	168th Ave-Tunneling Launch Shaft (STA 3+45.26)	LS	1
10b	160th Ave-Tunneling Launch Shaft (STA 59+05.79)	LS	1
10c	Talon Pointe -Tunneling Launch Shaft (STA 99+04.76)	LS	1
10d	Todd Creek -Tunneling Launch Shaft (STA 120+51.49)	LS	1
10e	E-470 -Tunneling Launch Shaft (STA 152+19.23)	LS	1
10f	136th Ave -Tunneling Launch Shaft (STA 231+00.79)	LS	1
10g	Villages at Riverdale - Tunneling Launch Shaft (STA 264+09.71)	LS	1
10i	Brantner Gulch - Tunneling Launch Shaft (STA 311+86.21)	LS	1
10j	120th Ave - Tunneling Launch Shaft (STA 348+43.85)	LS	1
11a	168th Ave-Tunneling Receiving Shaft (STA 2+22.27)	LS	1
11b	160th Ave-Tunneling Receiving Shaft (STA 61+34.85)	LS	1
11c	Talon Pointe -Tunneling Receiving Shaft (STA 98+05.61)	LS	1
11d	Todd Creek - Tunneling Receiving Shaft (STA 119+04.26)	LS	1
11e	E-470 - Tunneling Receiving Shaft (STA 160+69.06)	LS	1
11f	136th Ave - Tunneling Receiving Shaft (STA 229+04.01)	LS	1
11g	Villages at Riverdale -Tunneling Receiving Shaft (STA 265+27.18)	LS	1
11i	Brantner Gulch - Tunneling Receiving Shaft (STA 311+39.18)	LS	1
11j	120th Ave - Tunneling Receiving Shaft (STA 346+36.50)	LS	1
12a	168th Ave - Tunnel Excavation, Liner/Casing Pipe and Instrumentation	LF	110
12b	160th Ave - Tunnel Excavation, Liner/Casing Pipe and Instrumentation	LF	217
12c	Talon Pointe - Tunnel Excavation, Liner/Casing Pipe and Instrumentation	LF	91
12d	Todd Creek - Tunnel Excavation, Liner/Casing Pipe and Instrumentation	LF	140
12e	E-470 - Tunnel Excavation, Liner/Casing Pipe and Instrumentation	LF	860
12f	136th Ave - Tunnel Excavation, Liner/Casing Pipe and Instrumentation	LF	192
12g	Villages at Riverdale - Tunnel Excavation, Liner/Casing Pipe and Instrumentation	LF	109
12i	Brantner Gulch - Tunnel Excavation, Liner/Casing Pipe and Instrumentation	LF	42
12j	120th Ave - Tunnel Excavation, Liner/Casing Pipe and Instrumentation	LF	177
13a	168th Ave - Tunnel Carrier Pipe Installation and Backfill	LF	110
13b	160th Ave - Tunnel Carrier Pipe Installation and Backfill	LF	217
13c	Talon Pointe - Tunnel Carrier Pipe Installation and Backfill	LF	91
13d	Todd Creek - Tunnel Carrier Pipe Installation and Backfill	LF	140
13e	E-470 - Tunnel Carrier Pipe Installation and Backfill	LF	860
13f	136th Ave - Tunnel Carrier Pipe Installation and Backfill	LF	192
13g	Villages at Riverdale - Tunnel Carrier Pipe Installation and Backfill	LF	109
13i	Brantner Gulch - Tunnel Carrier Pipe Installation and Backfill	LF	42
13j	120th Ave - Tunnel Carrier Pipe Installation and Backfill	LF	177
14a	Combination Air Release and Vacuum Valve and Access Vault Assembly	EA	3
14b	Combination Air Release and Vacuum Valve Assembly – Installed in Manhole	EA	6
15	Waterline Drain/Blowoff Assembly	EA	4
16	Combined Access Manway, Combination Air Release and Vacuum Valve, and Blowoff Assembly	EA	16
17	Combined Access Manway and Blowoff Assembly	EA	-
18	Access Manway	EA	7
19	Connection Vault	EA	2
20	24-Inch Welded Steel Waterline Stub (Future Connection)	EA	2
21	Cathodic Protection System	LS	1
22	Waterline Cleaning, Filling, Pressure Testing, and Dewatering	LS	1
23	Fiber Optic Conduit - Installed in Tunnels	LF	5,684
24	Fiber Optic Conduit - Installed in Trenches	LF	91,013
25	Surface Restoration - Native Grass	SY	32,466
26	Surface Restoration - Lawn Seed	SY	2,745
27	Surface Restoration - Lawn Sod	SY	20
28	Asphalt Removal and Replacement, Patching	TON	15
29	Asphalt Removal and Replacement	TON	2,772
30	Concrete Sidewalk and Trail Removal and Replacement	SY	52
31	Concrete Curb and Gutter Removal and Replacement	LF	1,190
32	Gravel Surfacing Removal and Replacement (6-in)	TON	72
33	Aggregate Base Course*	TON	23,697
34	Fencing Removal and Replacement - Chain Link (8-ft height)	LF	130
35	Fencing Removal and Replacement - Cedar Wood (6-ft height)	LF	10
36	Fencing Removal and Replacement - Barbed Wire (3-ft height)	LF	3,917
37	Tree Removal and Replacement (4-in caliper)	EA	32
38	Owner-Authorized Unidentified Utility Relocation Allowance	LS	1
39	Contaminated Soils/Hazardous Material Removal and Disposal*	TON	200
40	Rock Excavation Allowance*	CY	200
41	Contractor Quality Control - Independent Testing	LS	1
42	Closeout	LS	1

* Due to the difficulty with estimating the quantity for these Pay Item Quantities, Bidders should assume that the final quantity for these Pay Items may vary by more than plus or minus twenty-five percent (25%) of the estimated quantity indicated. Unit Prices for such Pay Items are not subject to renegotiation regardless of the amount by which the actual quantity finally installed is above or below the estimated quantity indicated in the Bid Proposal form.

AECOM

Thornton WATER PROJECT

TWP SEG A, PHASE 1
PROJECT No. 12-777H5

CLIENT

CITY OF THORNTON
12450 WASHINGTON ST,
THORNTON, CO 80241
720.977.6700 tel 000.000.0000 fax
www.thorntonwaterproject.com

CONSULTANT

AECOM
7595 TECHNOLOGY WAY, STE 200
DENVER, CO 80237
T 303.694.2770 F 303.694.3946
www.aecom.com

ISSUE/REVISION

I/R	DATE	DESCRIPTION
E	10/15/2021	PRE-FINAL SUBMITTAL
C	04/27/2021	75% SUBMITTAL
B	09/25/2020	35% FINAL SUBMITTAL
A	04/21/2020	35% SUBMITTAL

VERIFIED SCALES

BAR IS ONE INCH ON ORIGINAL DRAWING
0 1"
IF NOT ONE INCH ON THIS SHEET, ADJUST SCALES ACCORDINGLY

DRAWN BY: SEM/JEC
CHKD BY: MG
CHKD BY: CAT
APPD BY: WEW

PROJECT NUMBER

60619101

SHEET TITLE

PROPERTY OWNER INFORMATION AND CONSTRAINTS

SHEET NUMBER

G016 OF 216

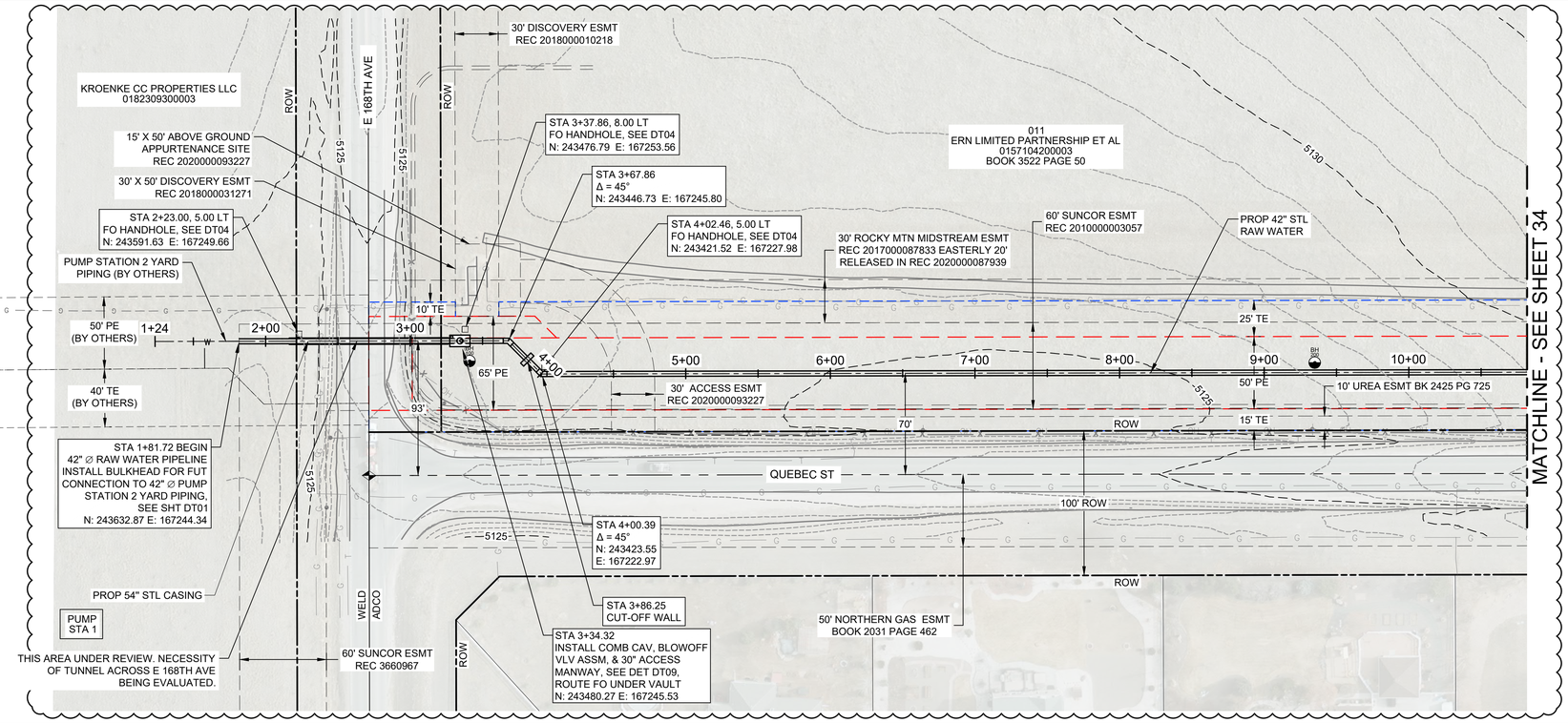

SUE LEVEL A UTILITY LOCATIONS STILL IN PROGRESS. EXISTING UTILITIES SUBJECT TO CHANGE.

DECISION ON TUNNELING 168TH AVE TBD.

MATCHLINES ON PP01 - PP10 WILL BE UPDATED ON FINALIZATION OF THE ALIGNMENT.

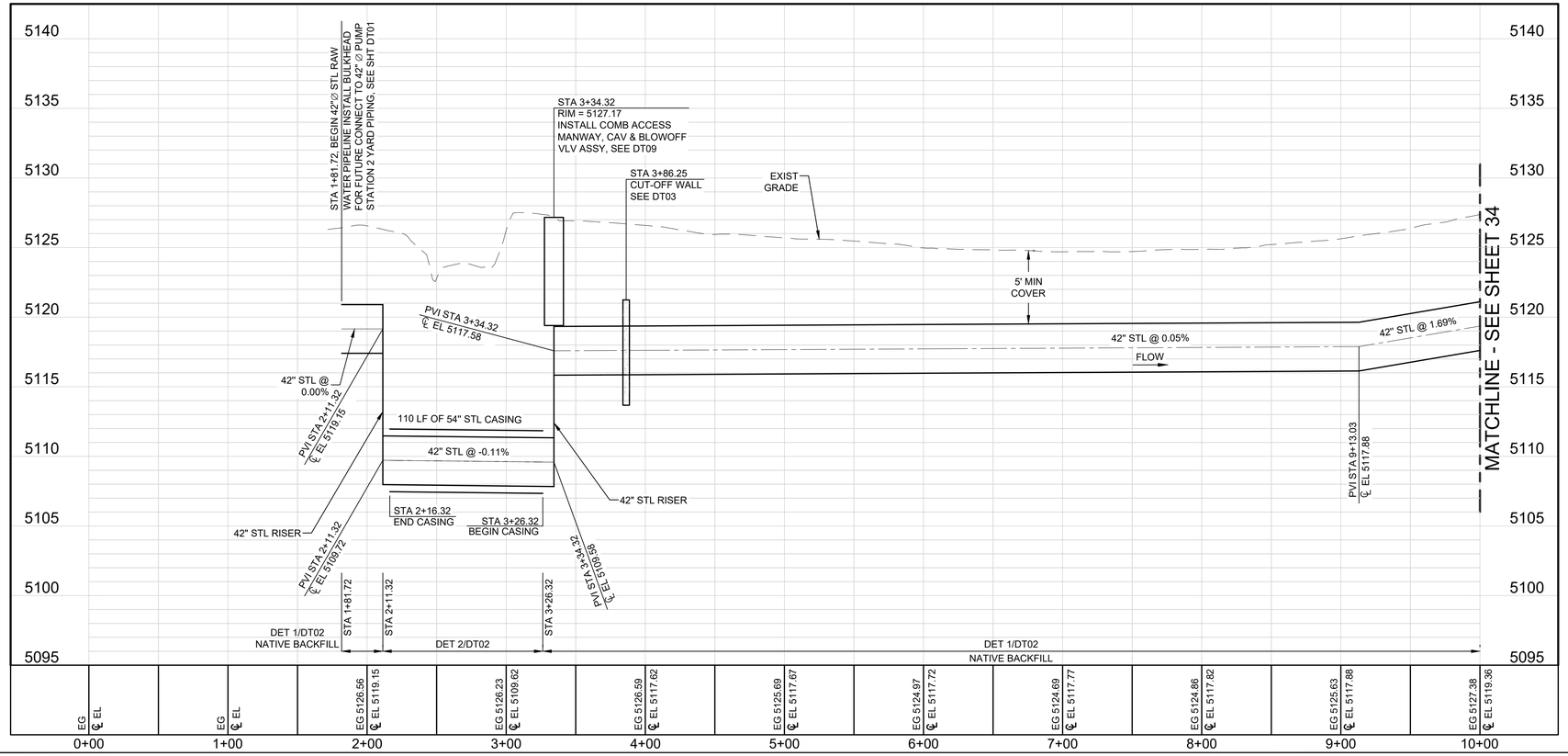

AECOM

Thornton WATER PROJECT

TWP SEG A, PHASE 1
PROJECT No. 12-777H5

CLIENT

CITY OF THORNTON
12450 WASHINGTON ST,
THORNTON, CO 80241
720.977.6700 tel 000.000.0000 fax
www.thorntonwaterproject.com

CONSULTANT

AECOM
7595 TECHNOLOGY WAY, STE 200
DENVER, CO 80237
T 303.694.2770 F 303.694.3946
www.aecom.com

ISSUE/REVISION

I/R	DATE	DESCRIPTION
E	10/15/2021	PRE-FINAL SUBMITTAL
C	04/27/2021	75% SUBMITTAL
B	09/25/2020	35% FINAL SUBMITTAL
A	04/21/2020	35% SUBMITTAL

VERIFIED SCALES

0 50 100
SCALE: HORIZ. 1"=50'
VERT. 1"=5'

BAR IS ONE INCH ON ORIGINAL DRAWING
0 1"
IF NOT ONE INCH ON THIS SHEET, ADJUST SCALES ACCORDINGLY

DRAWN BY:	SEM/JEC
CHKD BY:	MG
CHKD BY:	CAT
APPD BY:	WEW

PROJECT NUMBER

60619101

SHEET TITLE

PLAN & PROFILE STA 1+00 TO STA 10+00

SHEET NUMBER

PP01 33 OF 216

C:\pwworking\aecom_ds20_na_2019\stephen.muller@aecom.com\d0105069\PNP-C-1.dwg

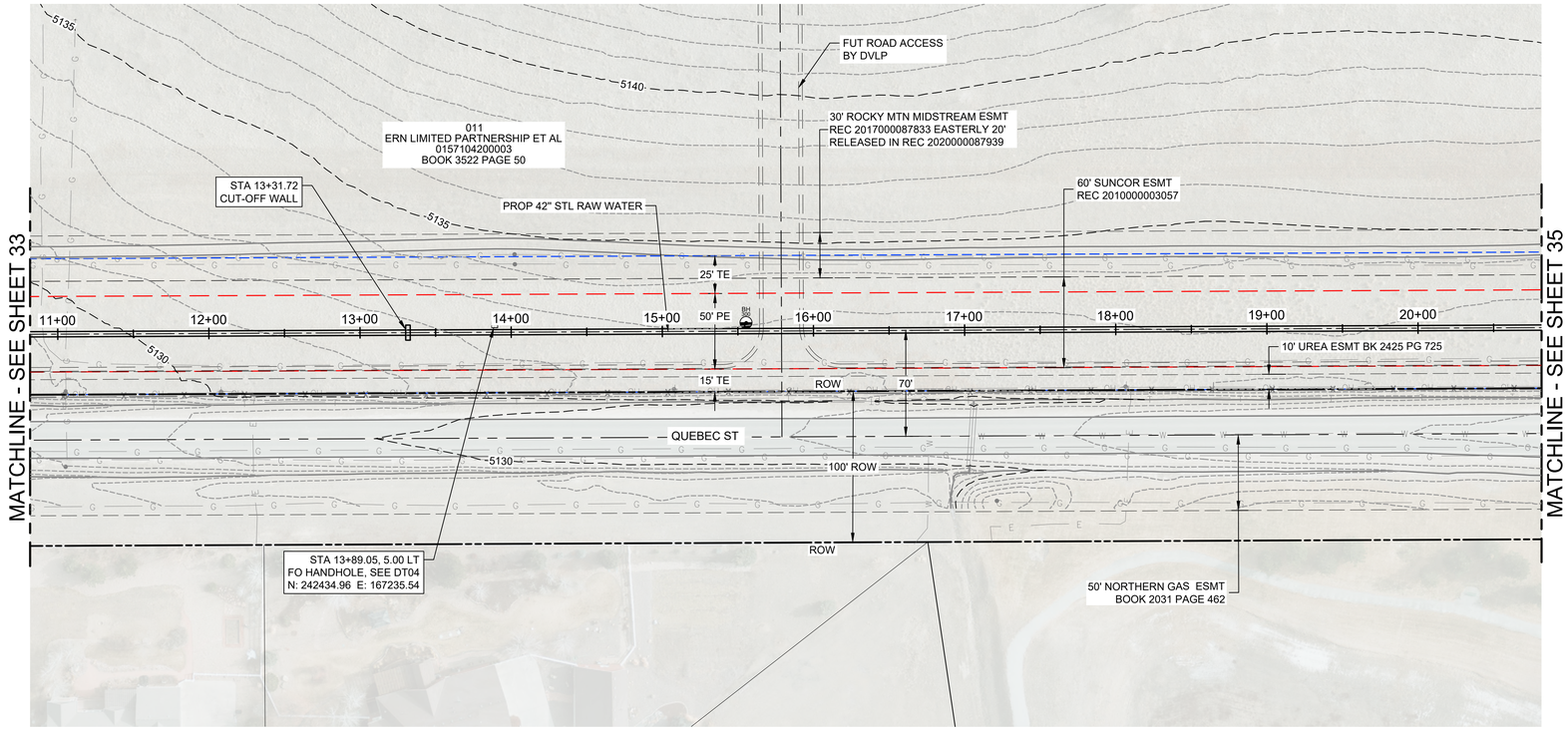

SUE LEVEL A UTILITY LOCATIONS STILL IN PROGRESS. EXISTING UTILITIES SUBJECT TO CHANGE.

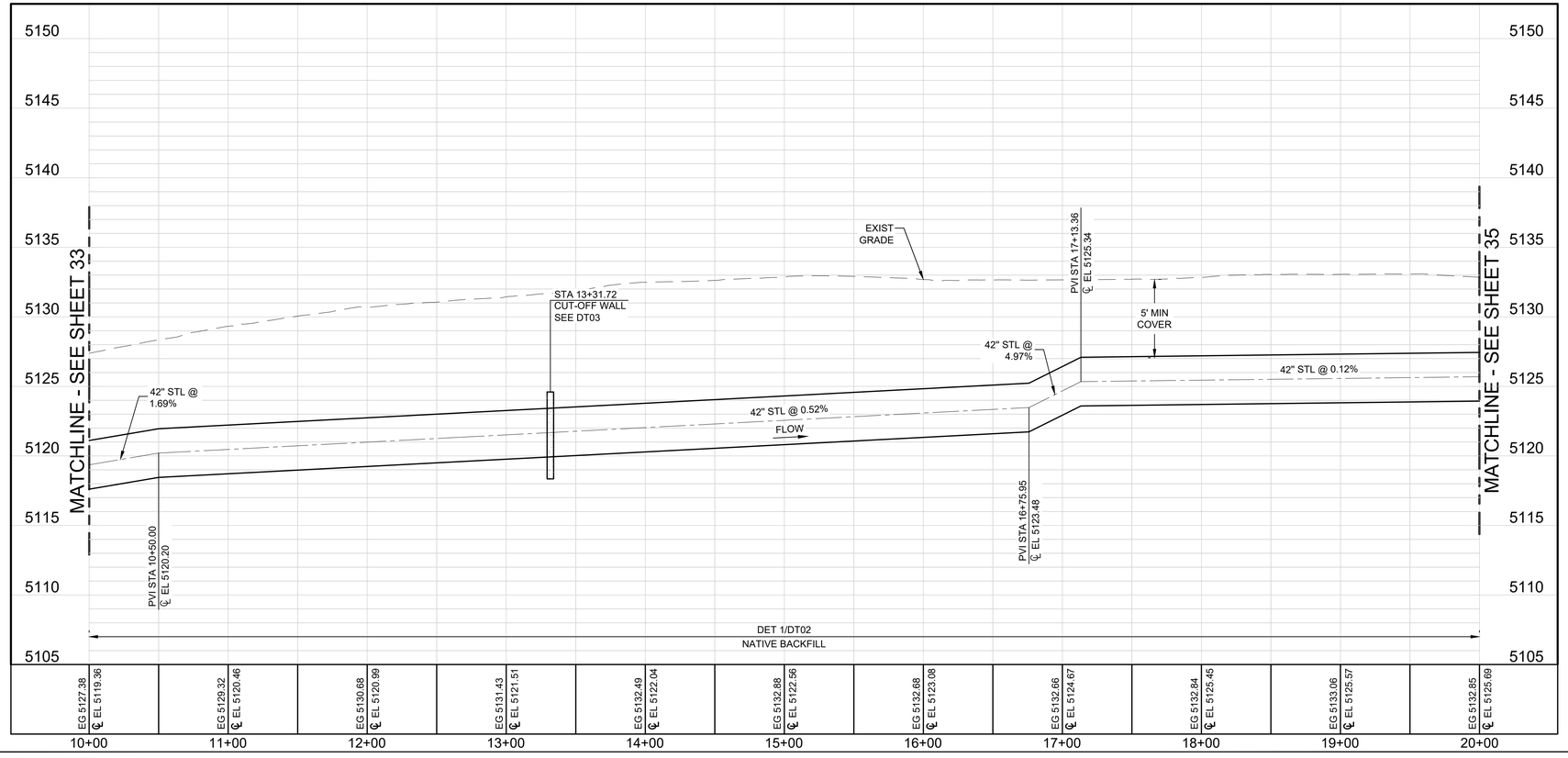

C:\pwworking\aecom_ds20_na_2019\stephen.muller@aecom.com\d0105069\PNP-C-1.dwg

AECOM

Thornton WATER PROJECT

TWP SEG A, PHASE 1
PROJECT No. 12-777H5

CLIENT

CITY OF THORNTON
12450 WASHINGTON ST,
THORNTON, CO 80241
720.977.6700 tel 000.000.0000 fax
www.thorntonwaterproject.com

CONSULTANT

AECOM
7595 TECHNOLOGY WAY, STE 200
DENVER, CO 80237
T 303.694.2770 F 303.694.3946
www.aecom.com

ISSUE/REVISION

I/R	DATE	DESCRIPTION
E	10/15/2021	PRE-FINAL SUBMITTAL
C	04/27/2021	75% SUBMITTAL
B	09/25/2020	35% FINAL SUBMITTAL
A	04/21/2020	35% SUBMITTAL

VERIFIED SCALES

0 50 100
SCALE: HORIZ. 1"=50'
VERT. 1"=5'

BAR IS ONE INCH ON ORIGINAL DRAWING
0 1"
IF NOT ONE INCH ON THIS SHEET, ADJUST SCALES ACCORDINGLY

DRAWN BY:	SEM/JEC
CHKD BY:	MG
CHKD BY:	CAT
APPD BY:	WEW

PROJECT NUMBER

60619101

SHEET TITLE

PLAN & PROFILE STA 10+00 TO STA 20+00

SHEET NUMBER

PP02 34 OF 216

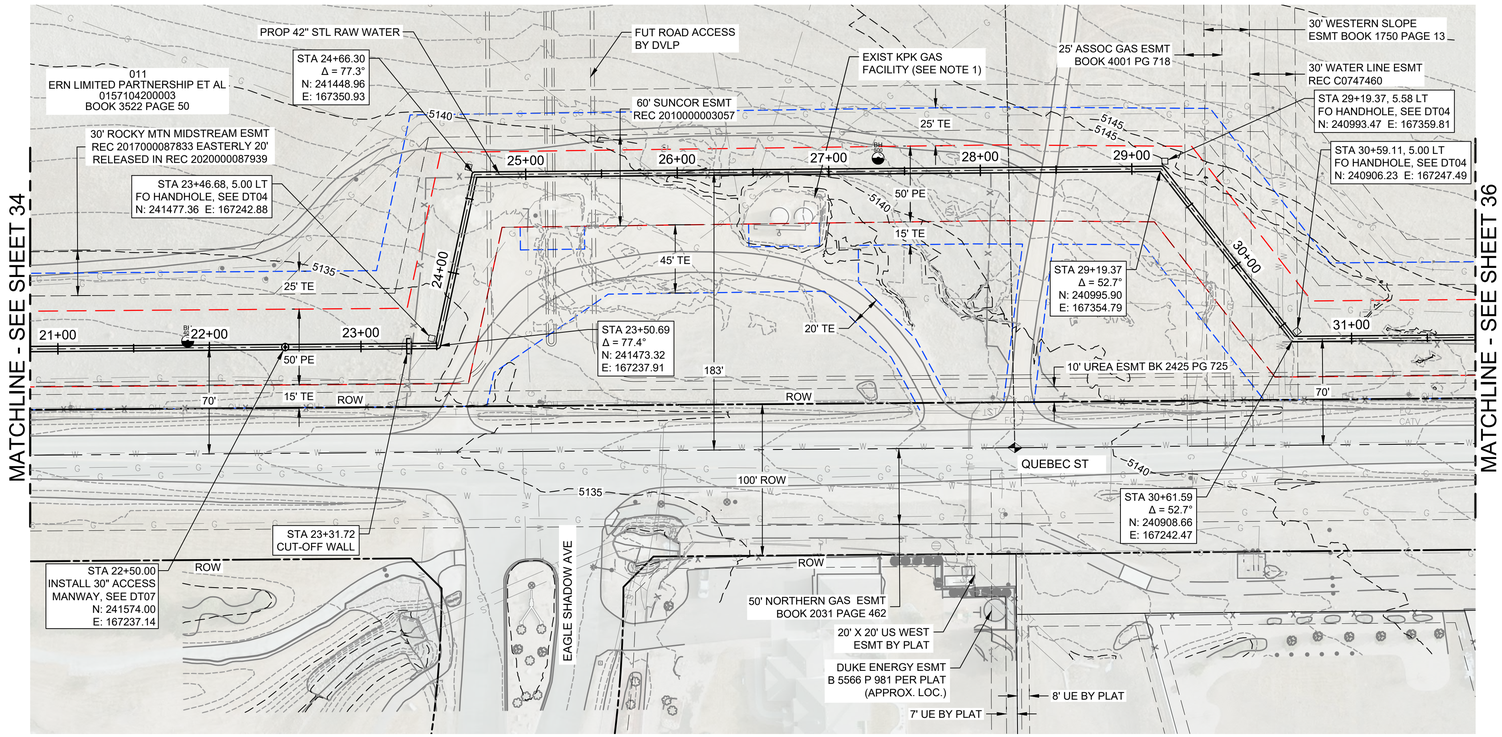

SUE LEVEL A UTILITY LOCATIONS STILL IN PROGRESS. EXISTING UTILITIES SUBJECT TO CHANGE.

NOTES:

1. CONTRACTOR TO COORDINATE WITH KPK PRIOR TO BEGINNING CONSTRUCTION NEAR GAS FACILITY.

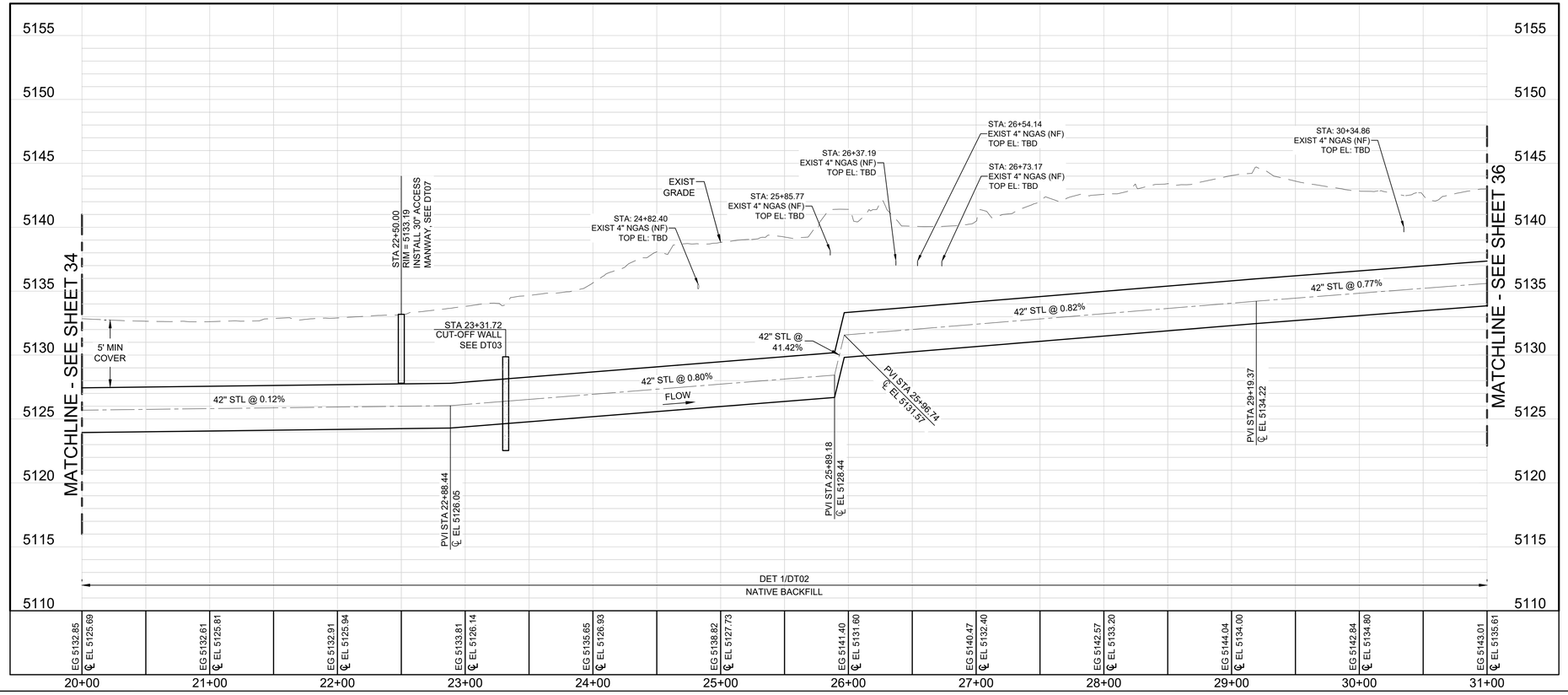

AECOM

Thornton WATER PROJECT

TWP SEG A, PHASE 1
PROJECT No. 12-777H5

CLIENT

CITY OF THORNTON
12450 WASHINGTON ST,
THORNTON, CO 80241
720.977.6700 tel 000.000.0000 fax
www.thorntonwaterproject.com

CONSULTANT

AECOM
7595 TECHNOLOGY WAY, STE 200
DENVER, CO 80237
T 303.694.2770 F 303.694.3946
www.aecom.com

ISSUE/REVISION

I/R	DATE	DESCRIPTION
E	10/15/2021	PRE-FINAL SUBMITTAL
C	04/27/2021	75% SUBMITTAL
B	09/25/2020	35% FINAL SUBMITTAL
A	04/21/2020	35% SUBMITTAL

VERIFIED SCALES

0 50 100
SCALE: HORIZ. 1"=50'
VERT. 1"=5'

BAR IS ONE INCH ON ORIGINAL DRAWING
0 1"
IF NOT ONE INCH ON THIS SHEET, ADJUST SCALES ACCORDINGLY

DRAWN BY:	SEM/JEC
CHKD BY:	MG
CHKD BY:	CAT
APPD BY:	WEW

PROJECT NUMBER

60619101

SHEET TITLE

PLAN & PROFILE STA 20+00 TO STA 31+00

SHEET NUMBER

PP03

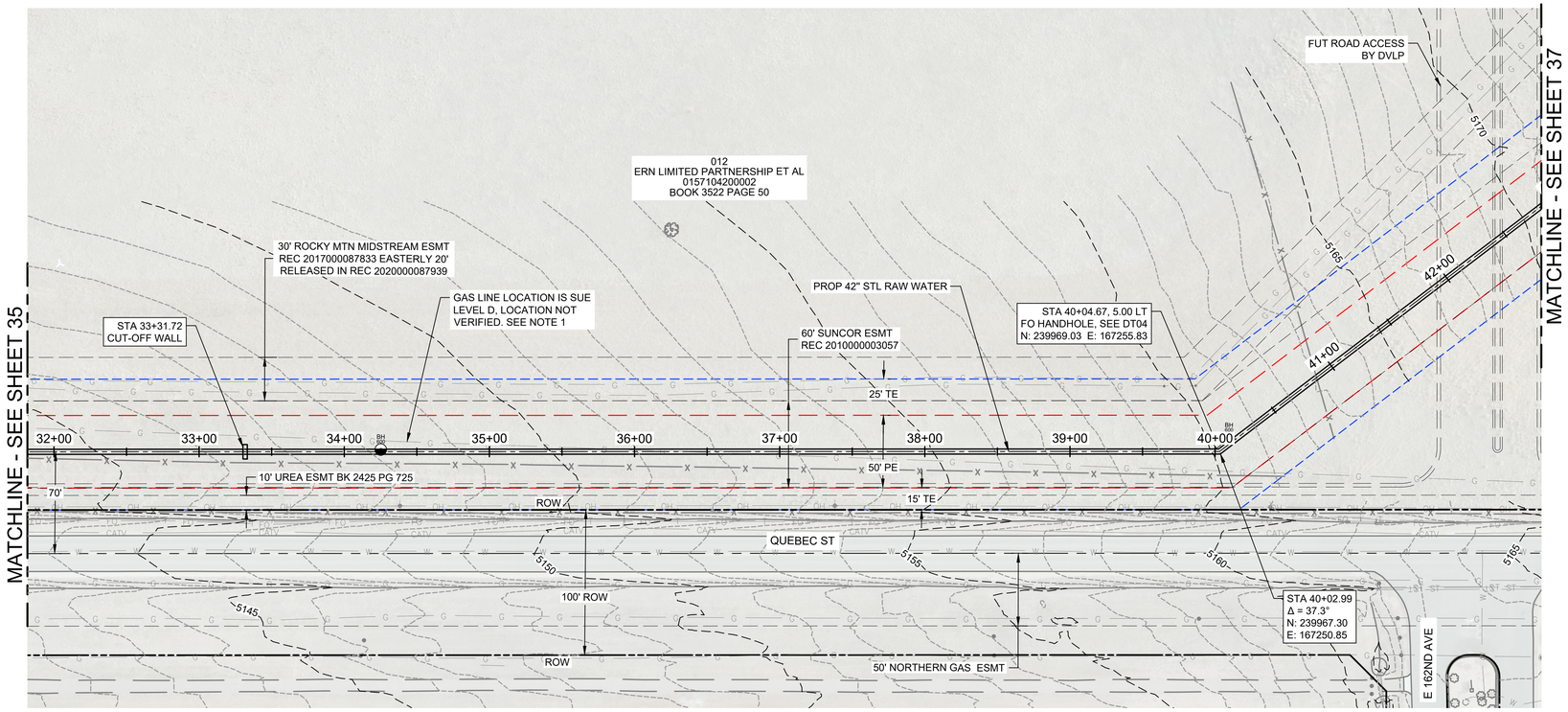

SUE LEVEL A UTILITY LOCATIONS STILL IN PROGRESS. EXISTING UTILITIES SUBJECT TO CHANGE.

NOTES:

1. TRENCH EXPLORATION BEING PERFORMED BY SUE FOR THIS UTILITY. IF FOUND, WILL COORDINATE PROTECTION OR RELOCATION OF THIS UTILITY.

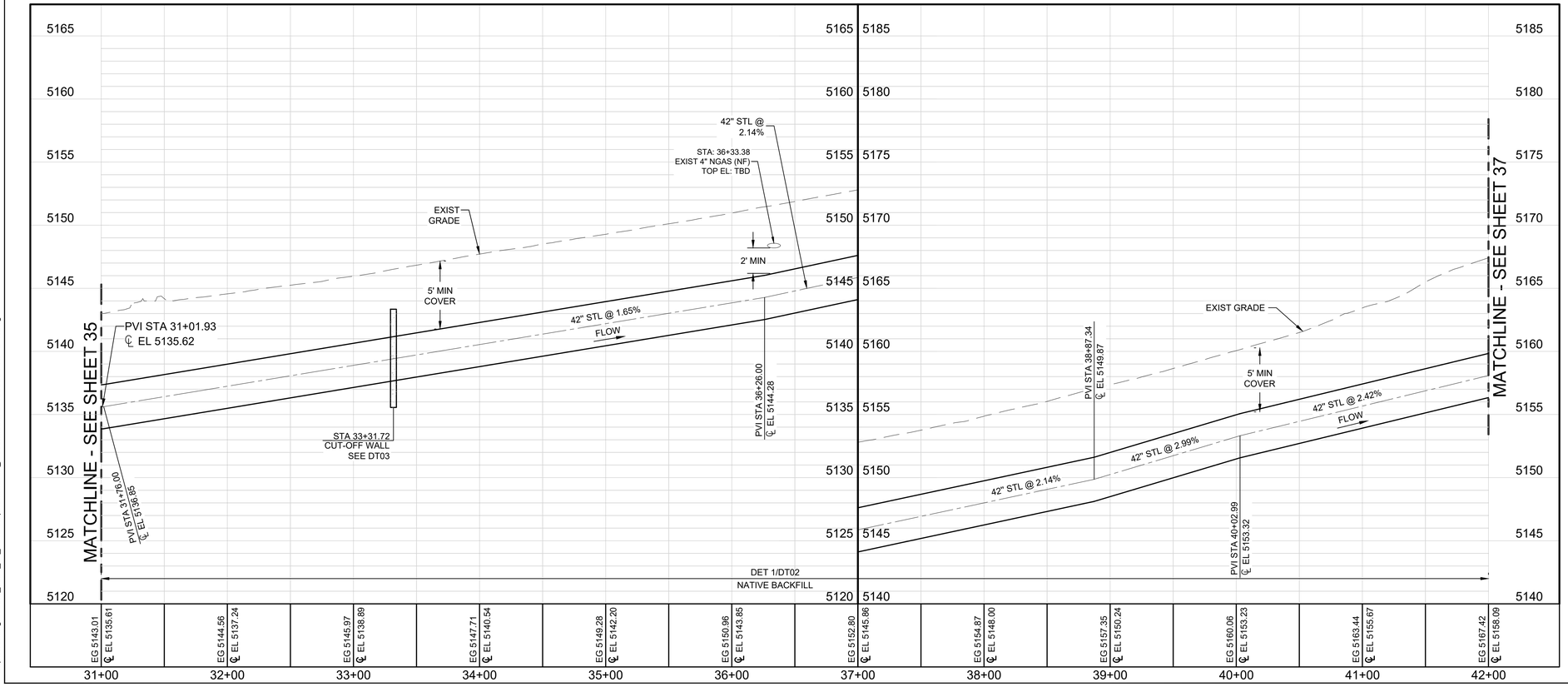

AECOM

Thornton WATER PROJECT

TWP SEG A, PHASE 1
PROJECT No. 12-777H5

CLIENT

CITY OF THORNTON
12450 WASHINGTON ST,
THORNTON, CO 80241
720.977.6700 tel 000.000.0000 fax
www.thorntonwaterproject.com

CONSULTANT

AECOM
7595 TECHNOLOGY WAY, STE 200
DENVER, CO 80237
T 303.694.2770 F 303.694.3946
www.aecom.com

ISSUE/REVISION

I/R	DATE	DESCRIPTION
E	10/15/2021	PRE-FINAL SUBMITTAL
C	04/27/2021	75% SUBMITTAL
B	09/25/2020	35% FINAL SUBMITTAL
A	04/21/2020	35% SUBMITTAL

VERIFIED SCALES

0 50 100
SCALE: HORIZ. 1"=50'
VERT. 1"=5'

BAR IS ONE INCH ON ORIGINAL DRAWING
0 1"
IF NOT ONE INCH ON THIS SHEET, ADJUST SCALES ACCORDINGLY

DRAWN BY:	SEM/JEC
CHKD BY:	MG
CHKD BY:	CAT
APPD BY:	WEW

PROJECT NUMBER

60619101

SHEET TITLE

PLAN & PROFILE STA 31+00 TO STA 42+00

SHEET NUMBER

PP04

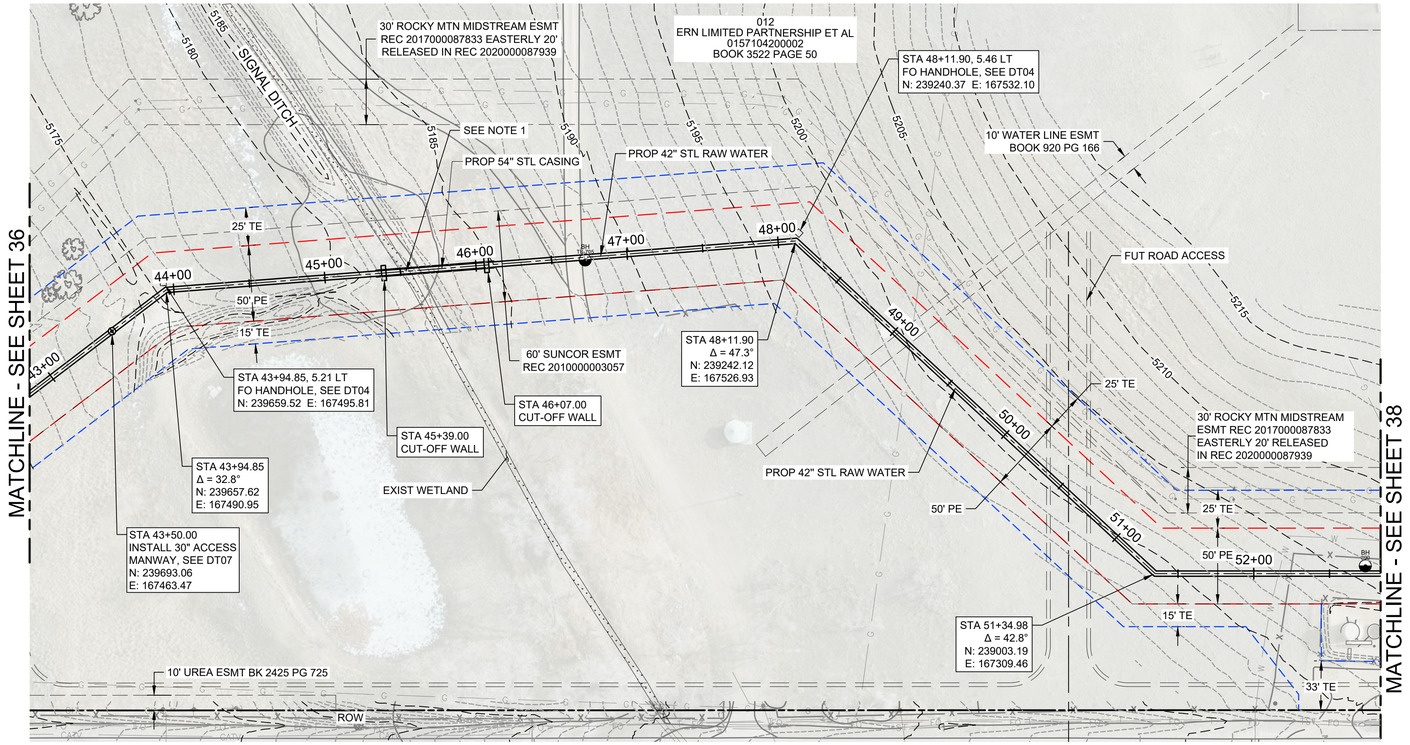

SUE LEVEL A UTILITY LOCATIONS STILL IN PROGRESS. EXISTING UTILITIES SUBJECT TO CHANGE.

NOTES:

1. SIGNAL DITCH CROSSING, SEE G016 FOR REQUIREMENTS, RESTRICTIONS AND CONTACT INFO. SEE DT19 FOR CROSSING DETAIL.

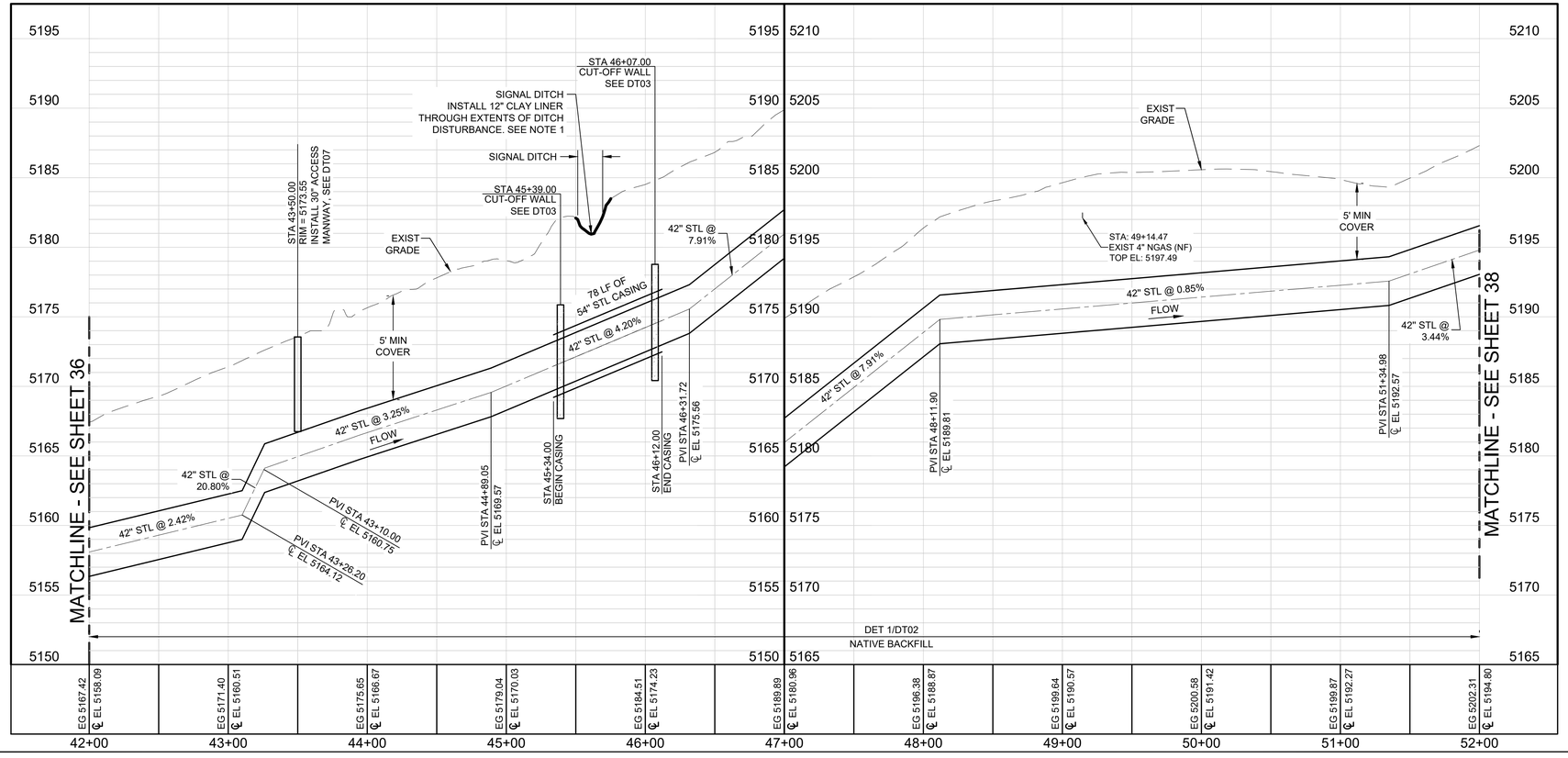

AECOM

Thornton WATER PROJECT

TWP SEG A, PHASE 1
PROJECT No. 12-777H5

CLIENT

CITY OF THORNTON
12450 WASHINGTON ST,
THORNTON, CO 80241
720.977.6700 tel 000.000.0000 fax
www.thorntonwaterproject.com

CONSULTANT

AECOM
7595 TECHNOLOGY WAY, STE 200
DENVER, CO 80237
T 303.694.2770 F 303.694.3946
www.aecom.com

ISSUE/REVISION

I/R	DATE	DESCRIPTION
E	10/15/2021	PRE-FINAL SUBMITTAL
C	04/27/2021	75% SUBMITTAL
B	09/25/2020	35% FINAL SUBMITTAL
A	04/21/2020	35% SUBMITTAL

VERIFIED SCALES

0 50 100
SCALE: HORIZ. 1"=50'
VERT. 1"=5'

BAR IS ONE INCH ON ORIGINAL DRAWING
0 1"
IF NOT ONE INCH ON THIS SHEET, ADJUST SCALES ACCORDINGLY

DRAWN BY:	SEM/JEC
CHKD BY:	MG
CHKD BY:	CAT
APPD BY:	WEW

PROJECT NUMBER

60619101

SHEET TITLE

PLAN & PROFILE STA 42+00 TO STA 52+00

SHEET NUMBER

PP05

C:\pwworking\aecom_ds20_na_2019\stephen.muller@aecom.com\d0105069\PNP-C-1.dwg

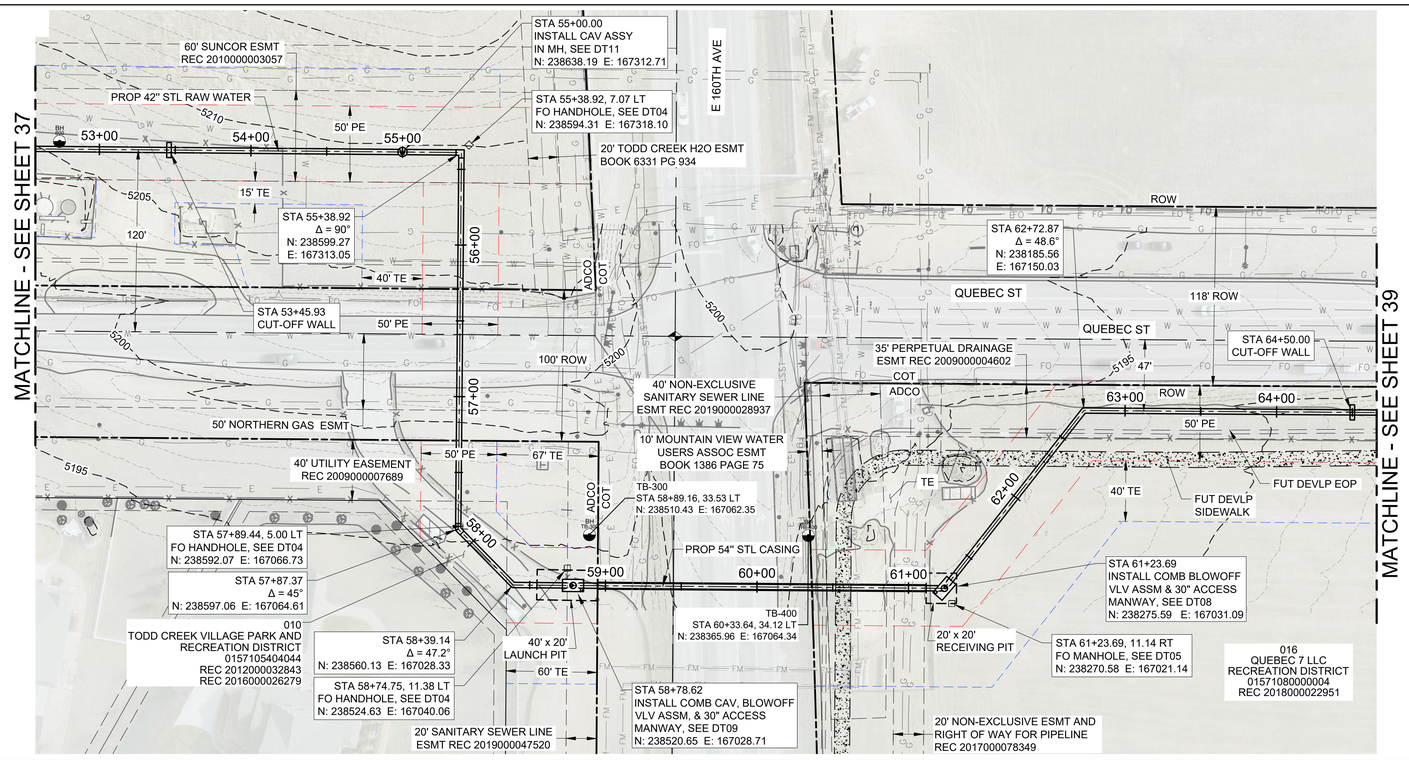

SUE LEVEL A UTILITY LOCATIONS STILL IN PROGRESS. EXISTING UTILITIES SUBJECT TO CHANGE.

NOTES:

1. FOR TUNNEL DETAILS, REFER TO DT27-DT29 AND IM01-IM11.
2. CONTACT JEREMIE LEWIS AT 307-371-1726 PRIOR TO WORKING NEAR WILLIAMS UTILITIES. N HEAVY EQUIPMENT IS PERMITTED OVER WILLIAMS LINES.
3. SPECIFICATION SECTION 31 71 00 TUNNEL EXCAVATION AND INITIAL SUPPORT PROVIDE THE ACCEPTABLE TUNNELING TECHNIQUES, THE MINIMUM SPECIFIED CASING PIPE THICKNESS, AND THE CASING PIPE INSTALLATION TOLERANCES.
4. GEOTECHNICAL BORE LOGS ARE SHOWN IN PROFILE FOR INFORMATION ONLY. PLEASE REFER TO GBR/GDR AND SHEETS DTXX-DTXX. BORE LOCATIONS OFFSET FROM THE ALIGNMENT MAY NOT BE AT EXISTING GROUND LEVEL IN THE PROFILE.

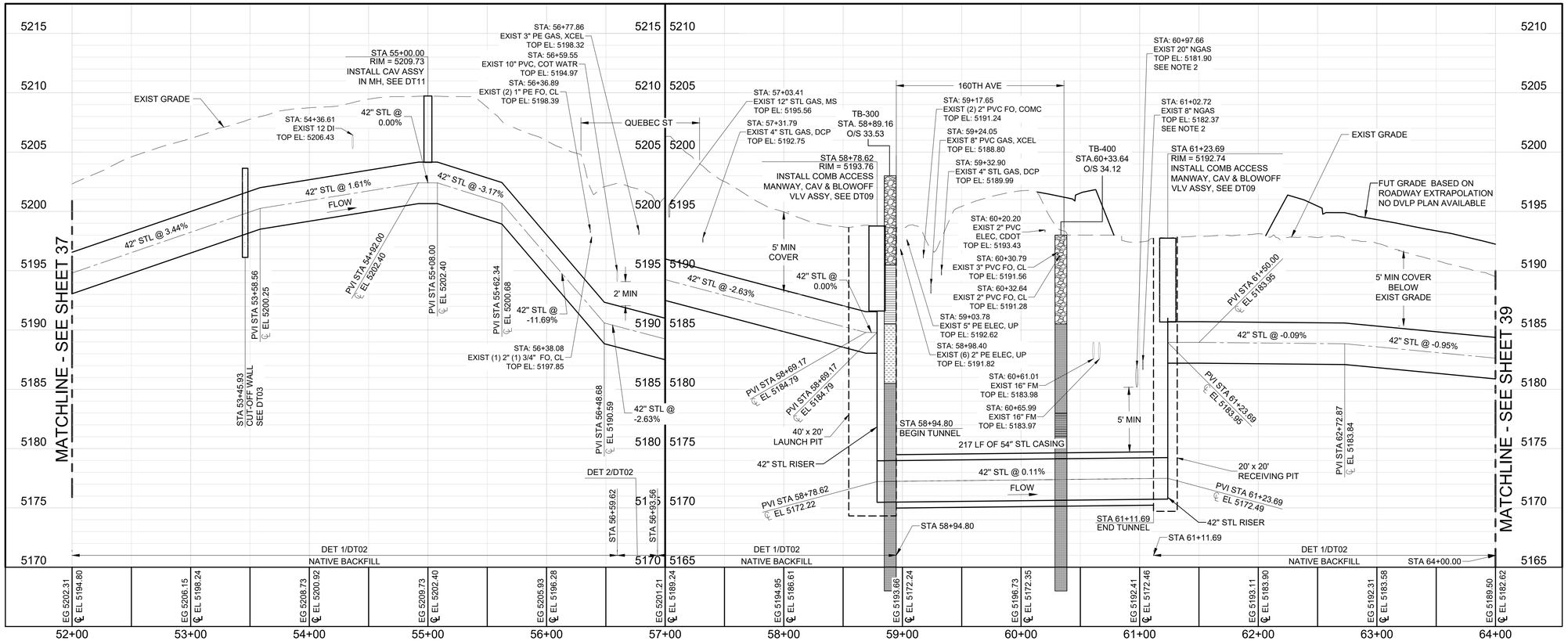

AECOM

Thornton WATER PROJECT

TWP SEG A, PHASE 1
PROJECT No. 12-777H5

CLIENT

CITY OF THORNTON
12450 WASHINGTON ST,
THORNTON, CO 80241
720.977.6700 tel 000.000.0000 fax
www.thorntonwaterproject.com

CONSULTANT

AECOM
7595 TECHNOLOGY WAY, STE 200
DENVER, CO 80237
T 303.694.2770 F 303.694.3946
www.aecom.com

ISSUE/REVISION

I/R	DATE	DESCRIPTION
E	10/15/2021	PRE-FINAL SUBMITTAL
C	04/27/2021	75% SUBMITTAL
B	09/25/2020	35% FINAL SUBMITTAL
A	04/21/2020	35% SUBMITTAL

VERIFIED SCALES

0 50 100
SCALE: HORIZ. 1"=50'
VERT. 1"=5'

BAR IS ONE INCH ON ORIGINAL DRAWING
0 1"
IF NOT ONE INCH ON THIS SHEET, ADJUST SCALES ACCORDINGLY

DRAWN BY:	SEM/JEC
CHKD BY:	MG
CHKD BY:	CAT
APPD BY:	WEW

PROJECT NUMBER

60619101

SHEET TITLE

PLAN & PROFILE STA 52+00 TO STA 64+00

SHEET NUMBER

PP06

C:\pwworking\aecom_ds20_na_2019\jenna.crouch@aecom.com\d0105069\PNP-C-1.dwg

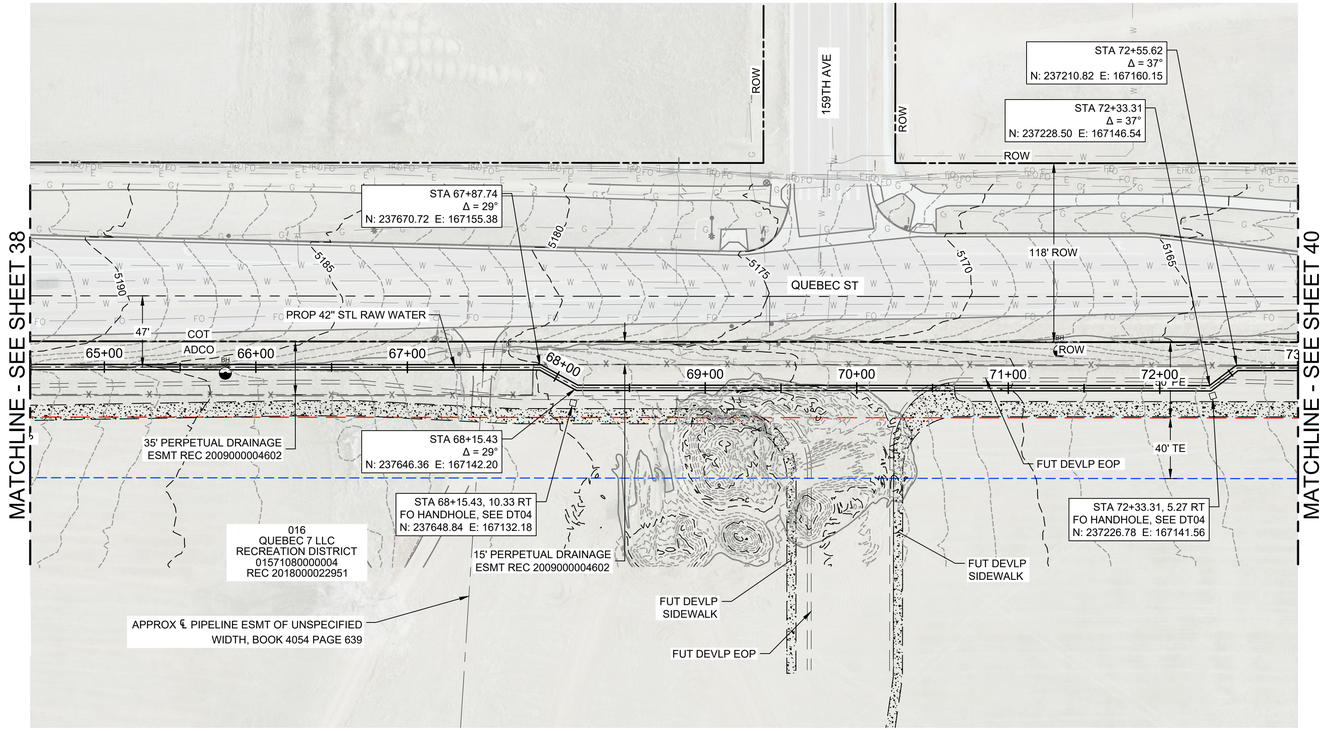

DUE TO LACK OF ROE, SUE LEVEL A UTILITY LOCATIONS STILL IN PROGRESS FROM STA 60+00 TO 66+50. EXISTING UTILITIES SUBJECT TO CHANGE.

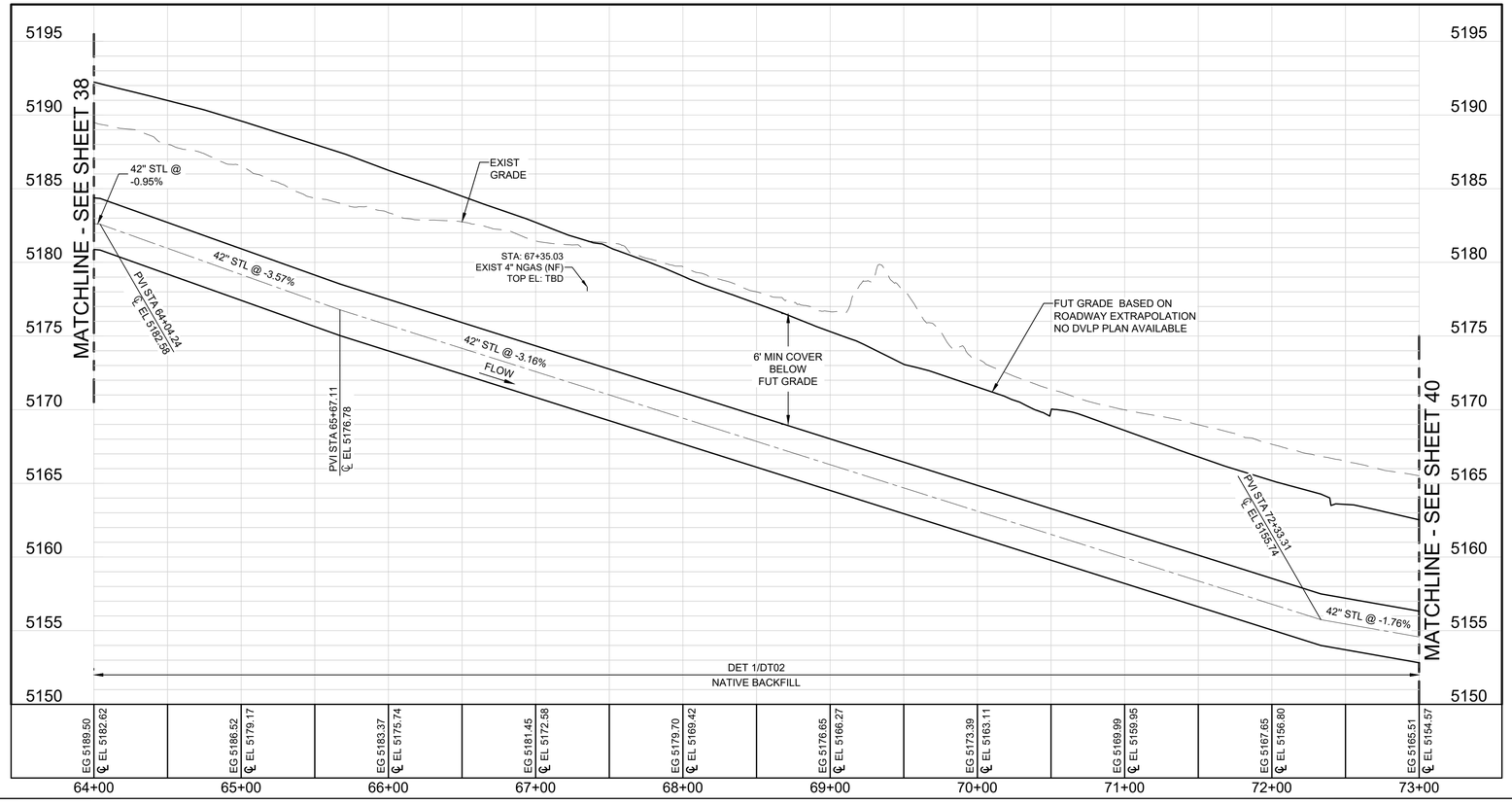

AECOM

Thornton WATER PROJECT

TWP SEG A, PHASE 1
PROJECT No. 12-777H5

CLIENT

CITY OF THORNTON
12450 WASHINGTON ST,
THORNTON, CO 80241
720.977.6700 tel 000.000.0000 fax
www.thorntonwaterproject.com

CONSULTANT

AECOM
7595 TECHNOLOGY WAY, STE 200
DENVER, CO 80237
T 303.694.2770 F 303.694.3946
www.aecom.com

ISSUE/REVISION

I/R	DATE	DESCRIPTION
E	10/15/2021	PRE-FINAL SUBMITTAL
C	04/27/2021	75% SUBMITTAL
B	09/25/2020	35% FINAL SUBMITTAL
A	04/21/2020	35% SUBMITTAL

VERIFIED SCALES

0 50 100
SCALE: HORIZ. 1"=50'
VERT. 1"=5'

BAR IS ONE INCH ON ORIGINAL DRAWING
0 1"
IF NOT ONE INCH ON THIS SHEET, ADJUST SCALES ACCORDINGLY

DRAWN BY:	SEM/JEC
CHKD BY:	MG
CHKD BY:	CAT
APPD BY:	WEW

PROJECT NUMBER

60619101

SHEET TITLE

PLAN & PROFILE STA 64+00 TO STA 73+00

SHEET NUMBER

PP07

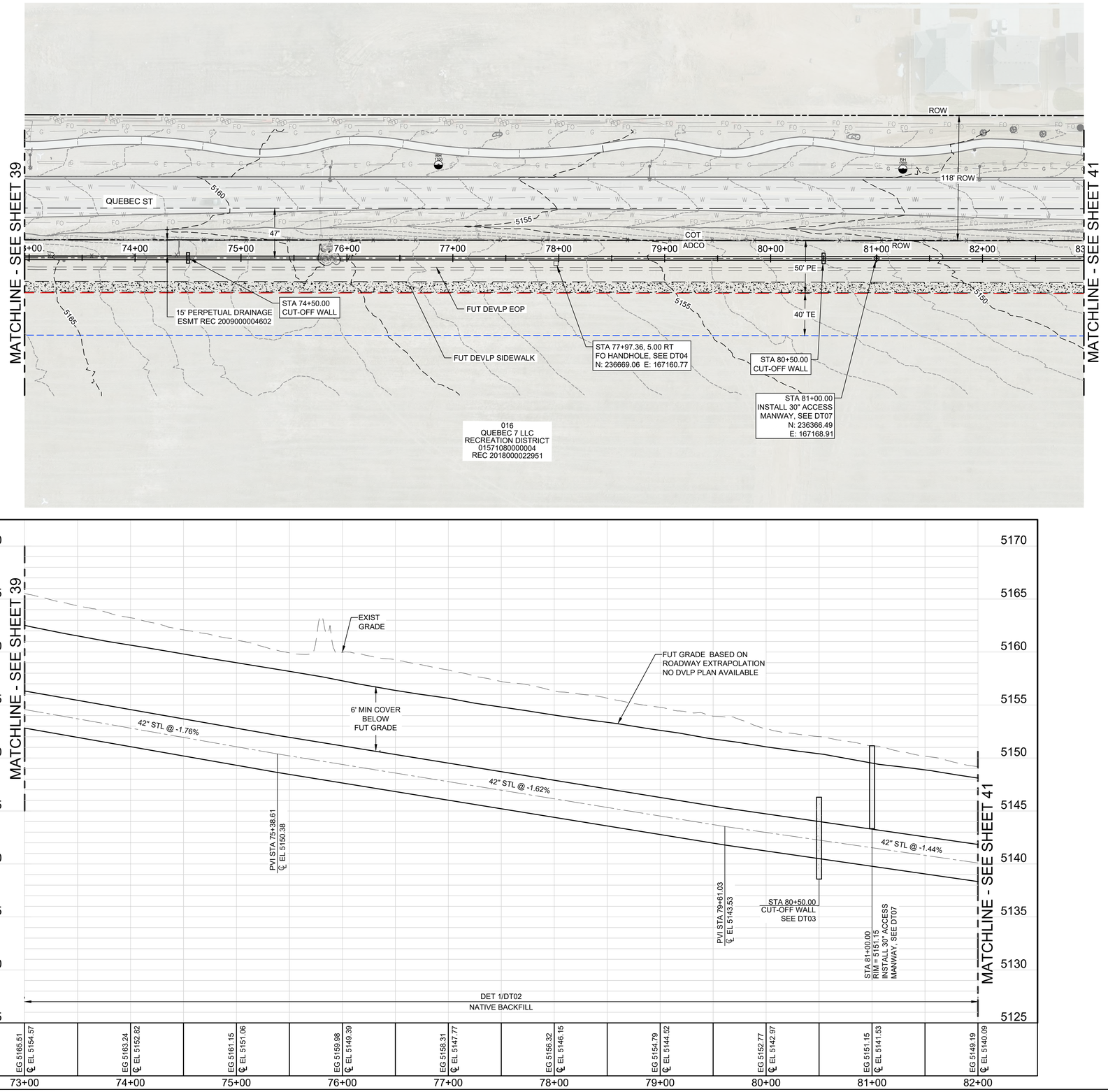

C:\pwworking\aecom_ds20_na_2019\stephen.muller@aecom.com\d0105069\PNP-C-1.dwg

AECOM

Thornton WATER PROJECT

TWP SEG A, PHASE 1
PROJECT No. 12-777H5

CLIENT

CITY OF THORNTON
12450 WASHINGTON ST,
THORNTON, CO 80241
720.977.6700 tel 000.000.0000 fax
www.thorntonwaterproject.com

CONSULTANT

AECOM
7595 TECHNOLOGY WAY, STE 200
DENVER, CO 80237
T 303.694.2770 F 303.694.3946
www.aecom.com

ISSUE/REVISION

I/R	DATE	DESCRIPTION
E	10/15/2021	PRE-FINAL SUBMITTAL
C	04/27/2021	75% SUBMITTAL
B	09/25/2020	35% FINAL SUBMITTAL
A	04/21/2020	35% SUBMITTAL

VERIFIED SCALES

0 50 100
SCALE: HORIZ. 1"=50'
VERT. 1"=5'

BAR IS ONE INCH ON ORIGINAL DRAWING
0 1"
IF NOT ONE INCH ON THIS SHEET, ADJUST SCALES ACCORDINGLY

DRAWN BY:	SEM/JEC
CHKD BY:	MG
CHKD BY:	CAT
APPD BY:	WEW

PROJECT NUMBER

60619101

SHEET TITLE

PLAN & PROFILE STA 73+00 TO STA 82+00

SHEET NUMBER

PP08

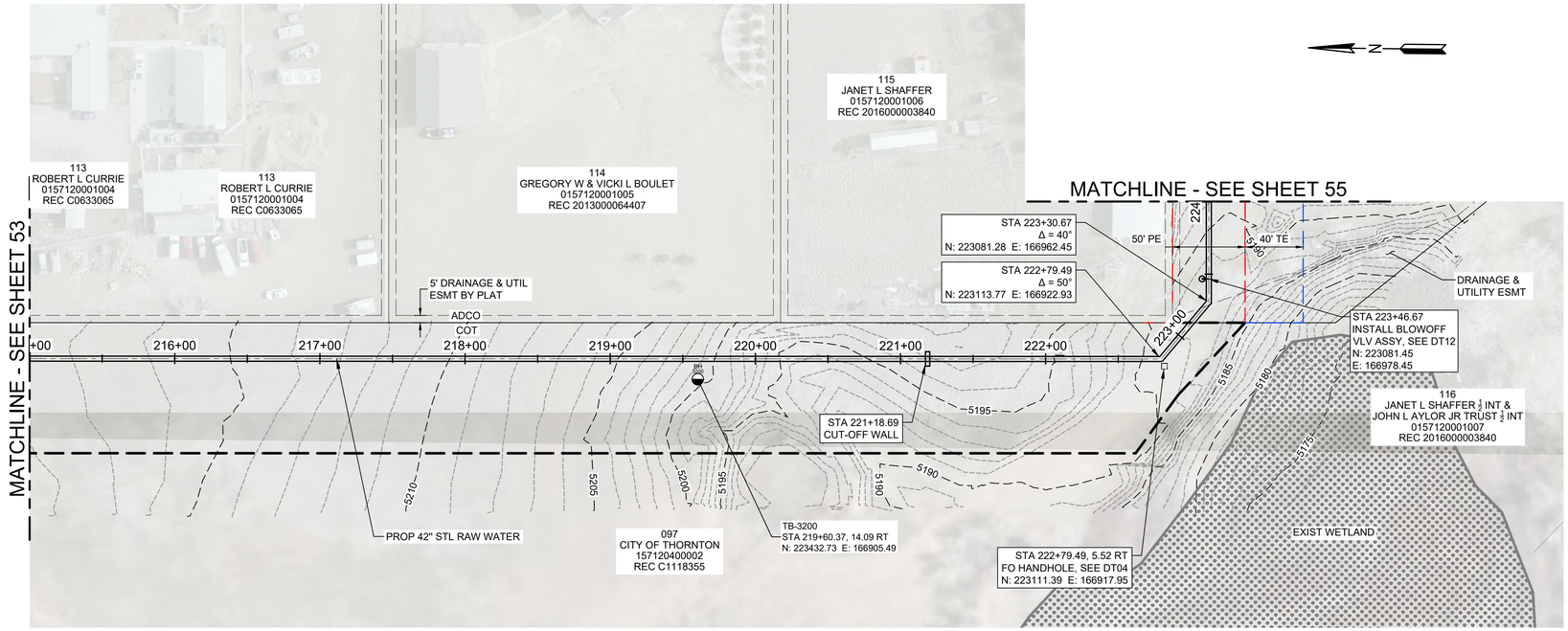

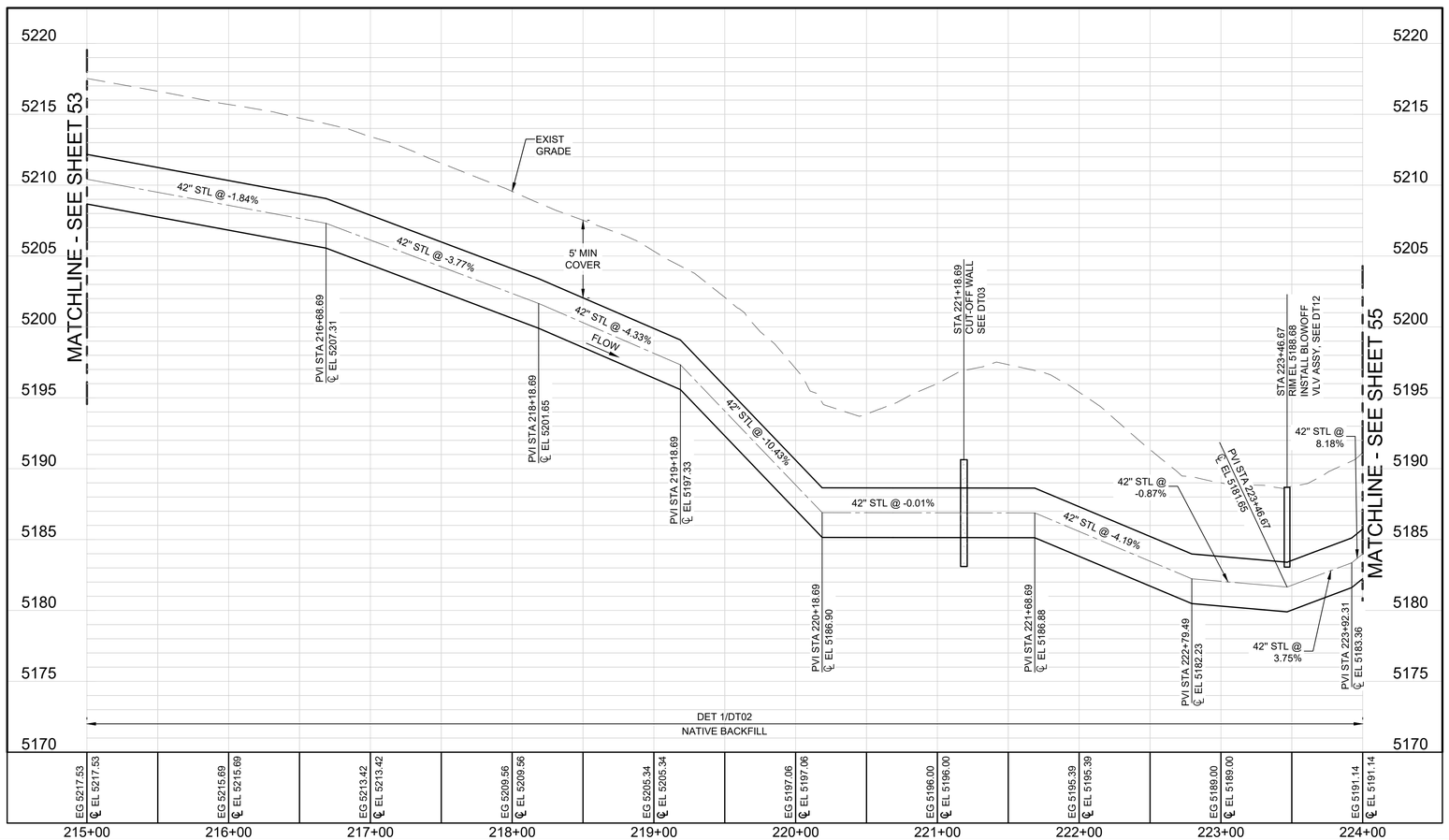

c:\pwworking\aecom_ds20_na_2019\stephen.muller@aecom.com\d0105069\PNP-C-3.dwg

AECOM

Thornton WATER PROJECT

TWP SEG A, PHASE 1
PROJECT No. 12-777H5

CLIENT

CITY OF THORNTON
12450 WASHINGTON ST,
THORNTON, CO 80241
720.977.6700 tel 000.000.0000 fax
www.thorntonwaterproject.com

CONSULTANT

AECOM
7595 TECHNOLOGY WAY, STE 200
DENVER, CO 80237
T 303.694.2770 F 303.694.3946
www.aecom.com

ISSUE/REVISION

I/R	DATE	DESCRIPTION
E	10/15/2021	PRE-FINAL SUBMITTAL
C	04/27/2021	75% SUBMITTAL
B	09/25/2020	35% FINAL SUBMITTAL
A	04/21/2020	35% SUBMITTAL

VERIFIED SCALES

0 50 100
SCALE: HORIZ. 1"=50'
VERT. 1"=5'

BAR IS ONE INCH ON ORIGINAL DRAWING
0 1"
IF NOT ONE INCH ON THIS SHEET, ADJUST SCALES ACCORDINGLY

DRAWN BY:	SEM/JEC
CHKD BY:	MG
CHKD BY:	CAT
APPD BY:	WEW

PROJECT NUMBER

60619101

SHEET TITLE

PLAN & PROFILE STA 215+00
TO STA 224+00

SHEET NUMBER

PP22

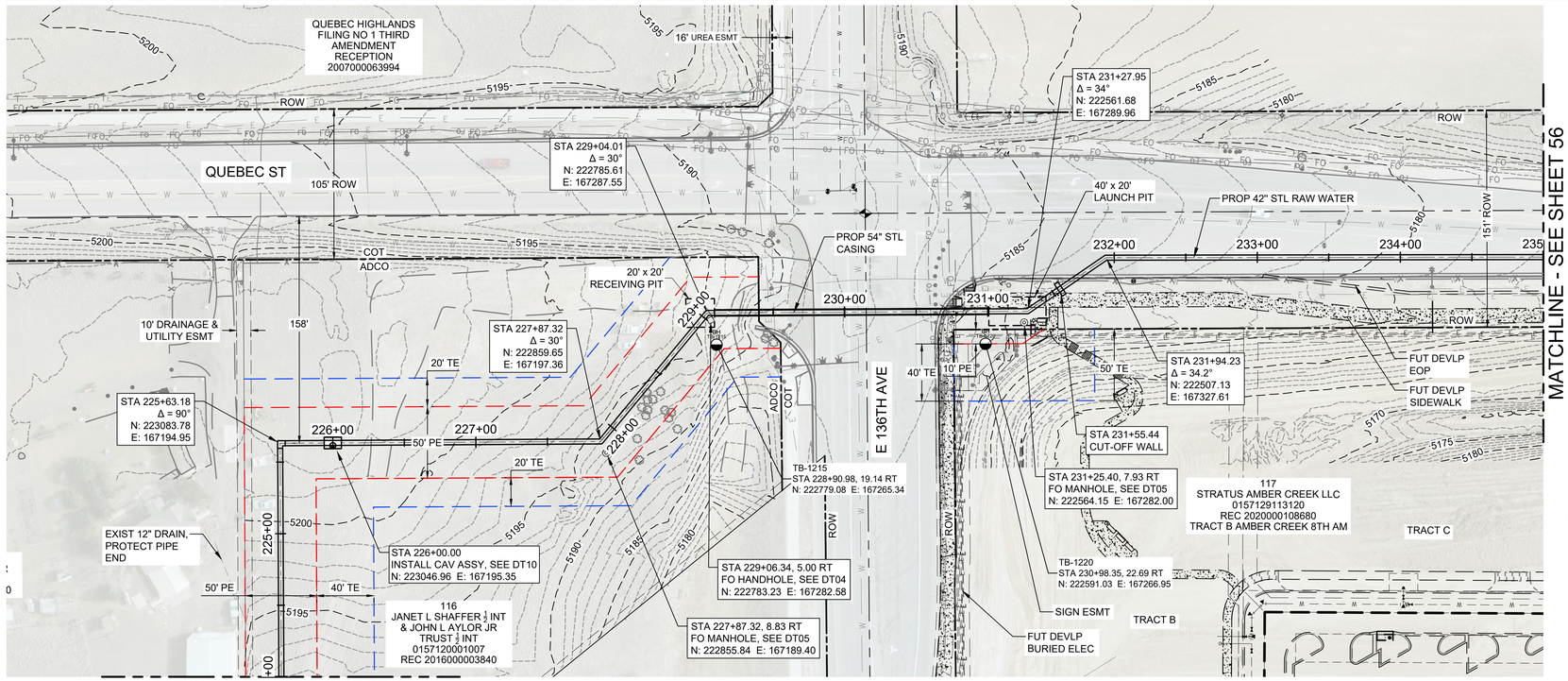

NOTES:

1. FOR TUNNEL DETAILS, REFER TO DT27-DT29 AND IM01-IM11.
2. SPECIFICATION SECTION 31 71 00 TUNNEL EXCAVATION AND INITIAL SUPPORT PROVIDE THE ACCEPTABLE TUNNELING TECHNIQUES, THE MINIMUM SPECIFIED CASING PIPE THICKNESS, AND THE CASING PIPE INSTALLATION TOLERANCES.
3. GEOTECHNICAL BORE LOGS IN PROFILE ARE SHOWN FOR INFORMATION ONLY. PLEASE REFER TO GBR/GDR AND SHEETS DTXX-DTXX. BORE LOCATIONS OFFSET FROM THE ALIGNMENT MAY NOT BE AT EXISTING GROUND LEVEL IN THE PROFILE.

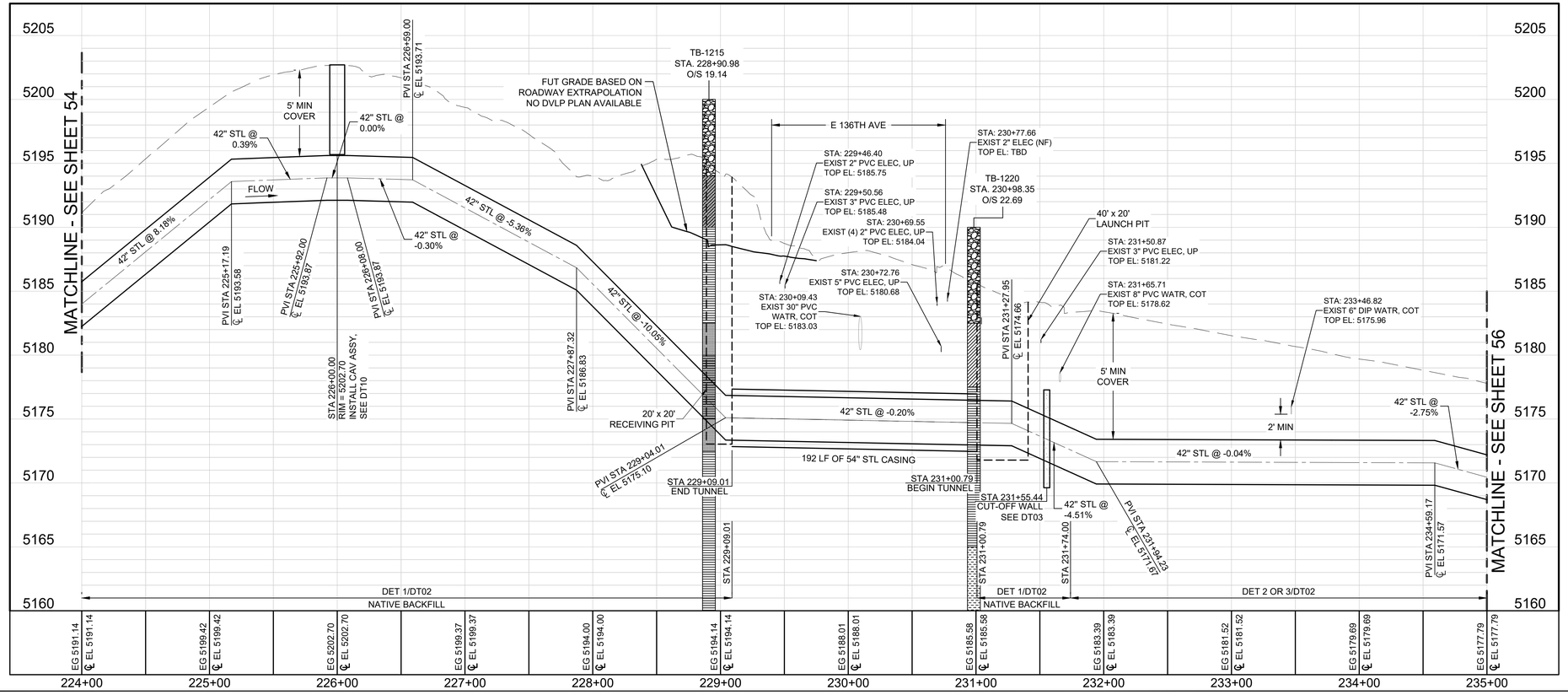

AECOM

Thornton WATER PROJECT

TWP SEG A, PHASE 1
PROJECT No. 12-777H5

CLIENT

CITY OF THORNTON
12450 WASHINGTON ST,
THORNTON, CO 80241
720.977.6700 tel 000.000.0000 fax
www.thorntonwaterproject.com

CONSULTANT

AECOM
7595 TECHNOLOGY WAY, STE 200
DENVER, CO 80237
T 303.694.2770 F 303.694.3946
www.aecom.com

ISSUE/REVISION

I/R	DATE	DESCRIPTION
E	10/15/2021	PRE-FINAL SUBMITTAL
C	04/27/2021	75% SUBMITTAL
B	09/25/2020	35% FINAL SUBMITTAL
A	04/21/2020	35% SUBMITTAL

VERIFIED SCALES

0 50 100
SCALE: HORIZ. 1"=50'
VERT. 1"=5'

BAR IS ONE INCH ON ORIGINAL DRAWING
0 1"
IF NOT ONE INCH ON THIS SHEET, ADJUST SCALES ACCORDINGLY

DRAWN BY:	SEM/JEC
CHKD BY:	MG
CHKD BY:	CAT
APPD BY:	WEW

PROJECT NUMBER

60619101

SHEET TITLE

PLAN & PROFILE STA 224+00 TO STA 235+00

SHEET NUMBER

PP23 55 OF 216

c:\pwworking\aecom_ds20_na_2019\stephen.muller@aecom.com\d0105069\PNP-C-3.dwg

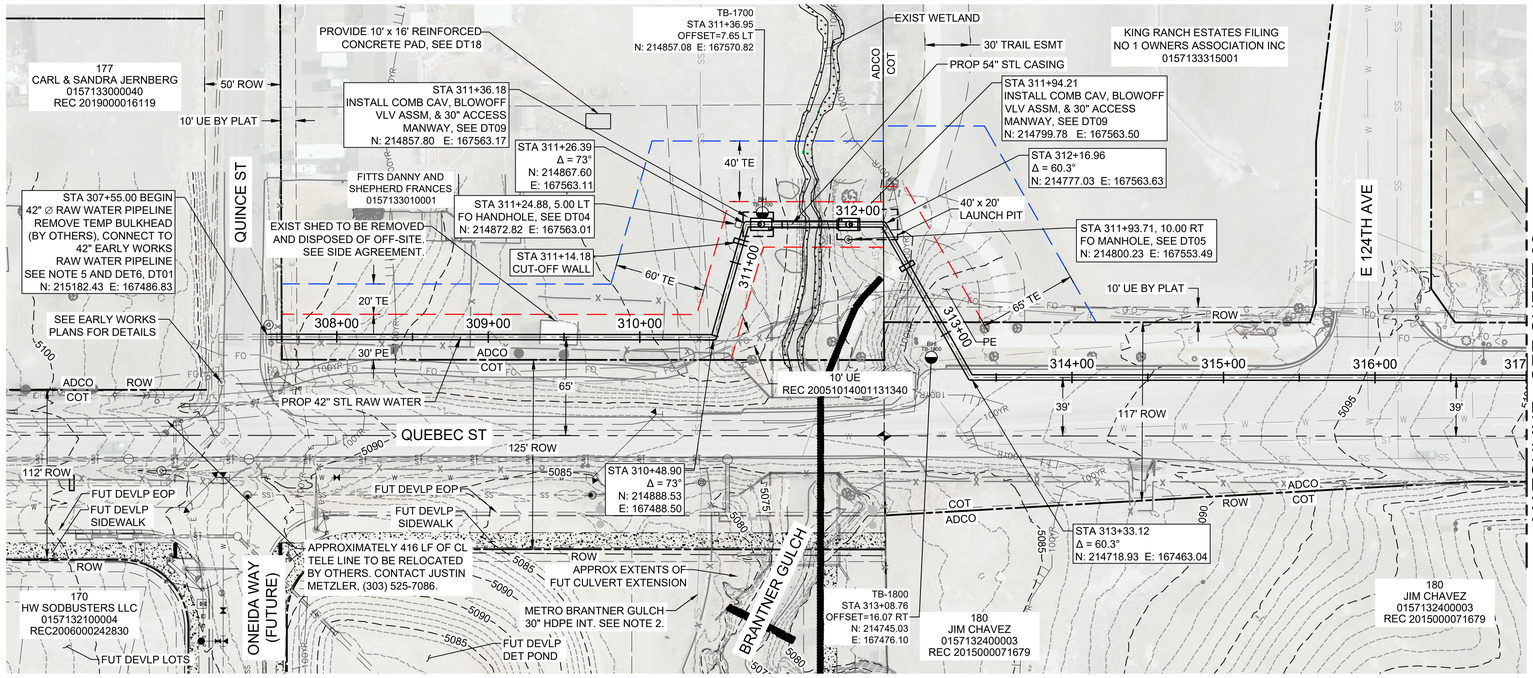

SUE LEVEL A UTILITY LOCATIONS STILL IN PROGRESS. EXISTING UTILITIES SUBJECT TO CHANGE.

NOTES:

1. FOR TUNNEL DETAILS, REFER TO DT27-DT29 AND IM01-IM11.
2. CONTACT CRAIG SIMMONDS AT 303-286-3338 48 HOURS PRIOR TO CROSSING THE METRO SANITARY SEWER LINE SO AN INSPECTION CAN BE SCHEDULED.
3. SPECIFICATION SECTION 31 71 00 TUNNEL EXCAVATION AND INITIAL SUPPORT PROVIDE THE ACCEPTABLE TUNNELING TECHNIQUES, THE MINIMUM SPECIFIED CASING PIPE THICKNESS, AND THE CASING PIPE INSTALLATION TOLERANCES.
4. GEOTECHNICAL BORE LOGS IN PROFILE ARE SHOWN FOR INFORMATION ONLY. PLEASE REFER TO GBR/GDR AND SHEETS DTXX-DTXX. BORE LOCATIONS OFFSET FROM THE ALIGNMENT MAY NOT BE AT EXISTING GROUND LEVEL IN THE PROFILE.
5. EARLY WORKS PIPE (44.5" O.D. 0.25" WALL, AWWA C222 POLYURETHANE COATING, AWWA C205 CEMENT MORTAR LINING, ASTM A1018 Gr B STEEL).
6. 100-YR FLOODPLAIN IS DEPICTED IN PROFILE FOR INFORMATION ONLY. REFER TO FEMA ZONE A MAPPING/FLOOD HAZARD MAPS.

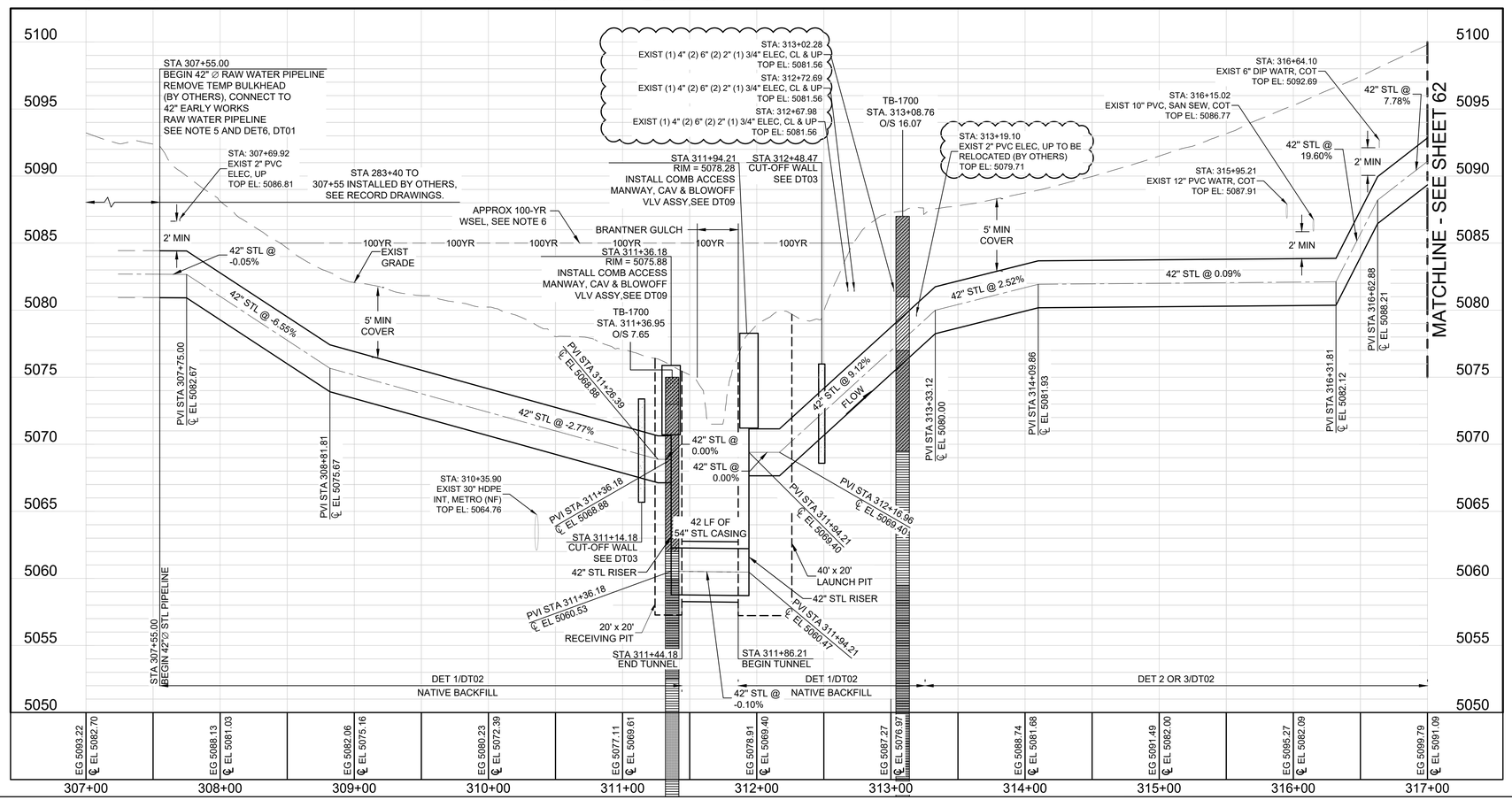

AECOM

Thornton WATER PROJECT

TWP SEG A, PHASE 1
PROJECT No. 12-777H5

CLIENT

CITY OF THORNTON
12450 WASHINGTON ST,
THORNTON, CO 80241
720.977.6700 tel 000.000.0000 fax
www.thorntonwaterproject.com

CONSULTANT

AECOM
7595 TECHNOLOGY WAY, STE 200
DENVER, CO 80237
T 303.694.2770 F 303.694.3946
www.aecom.com

ISSUE/REVISION

I/R	DATE	DESCRIPTION
E	10/15/2021	PRE-FINAL SUBMITTAL
C	04/27/2021	75% SUBMITTAL
B	09/25/2020	35% FINAL SUBMITTAL
A	04/21/2020	35% SUBMITTAL

VERIFIED SCALES

0 50 100
SCALE: HORIZ. 1"=50'
VERT. 1"=5'

BAR IS ONE INCH ON ORIGINAL DRAWING
0 1"
IF NOT ONE INCH ON THIS SHEET, ADJUST SCALES ACCORDINGLY

DRAWN BY:	SEM/JEC
CHKD BY:	MG
CHKD BY:	CAT
APPD BY:	WEW

PROJECT NUMBER

60619101

SHEET TITLE

PLAN & PROFILE STA 307+55 TO STA 317+00

SHEET NUMBER

PP32

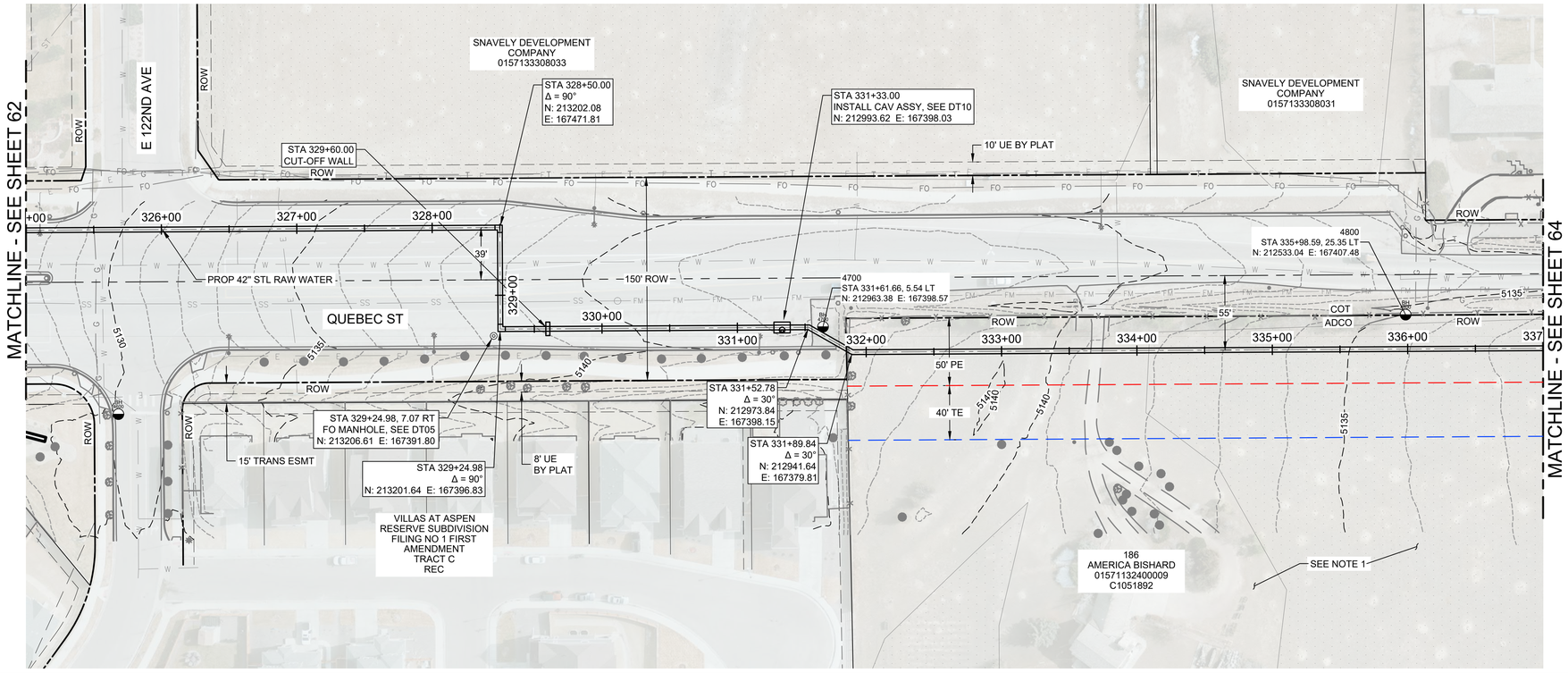

SUE LEVEL A UTILITY LOCATIONS STILL IN PROGRESS. EXISTING UTILITIES IN TUNNEL PROFILE SUBJECT TO CHANGE.

NOTES:

1. PRAIRIE DOG COLONY IN THIS AREA - CONTRACTOR SHALL CONTACT ERO ONE MONTH PRIOR TO CONSTRUCTION TO COMPLETE BURROWING OWL SURVEY. PASSIVE DISPERSAL AND/OR EUTHANIZATION PER SECTION 01 11 00 SUMMARY OF WORK.

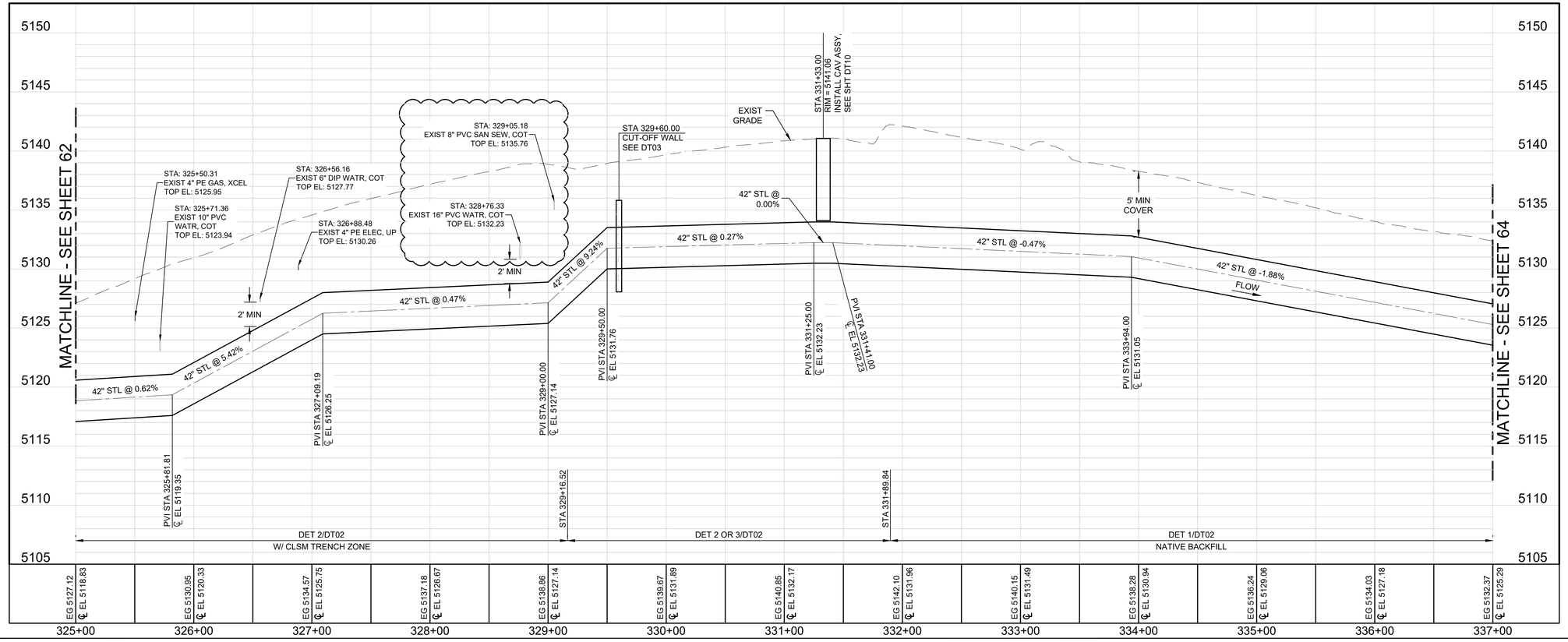

AECOM

Thornton WATER PROJECT

TWP SEG A, PHASE 1
PROJECT No. 12-777H5

CLIENT

CITY OF THORNTON
12450 WASHINGTON ST,
THORNTON, CO 80241
720.977.6700 tel 000.000.0000 fax
www.thorntonwaterproject.com

CONSULTANT

AECOM
7595 TECHNOLOGY WAY, STE 200
DENVER, CO 80237
T 303.694.2770 F 303.694.3946
www.aecom.com

ISSUE/REVISION

I/R	DATE	DESCRIPTION
E	10/15/2021	PRE-FINAL SUBMITTAL
C	04/27/2021	75% SUBMITTAL
B	09/25/2020	35% FINAL SUBMITTAL
A	04/21/2020	35% SUBMITTAL

VERIFIED SCALES

0 50 100
SCALE: HORIZ. 1"=50'
VERT. 1"=5'

BAR IS ONE INCH ON ORIGINAL DRAWING
0 1"
IF NOT ONE INCH ON THIS SHEET, ADJUST SCALES ACCORDINGLY

DRAWN BY:	SEM/JEC
CHKD BY:	MG
CHKD BY:	CAT
APPD BY:	WEW

PROJECT NUMBER

60619101

SHEET TITLE

PLAN & PROFILE STA 325+00 TO STA 337+00

SHEET NUMBER

PP34 63 OF 216

c:\pwworking\aecom_ds20_na_2019\stephen.muller@aecom.com\d0105069\PNP-C-4.dwg

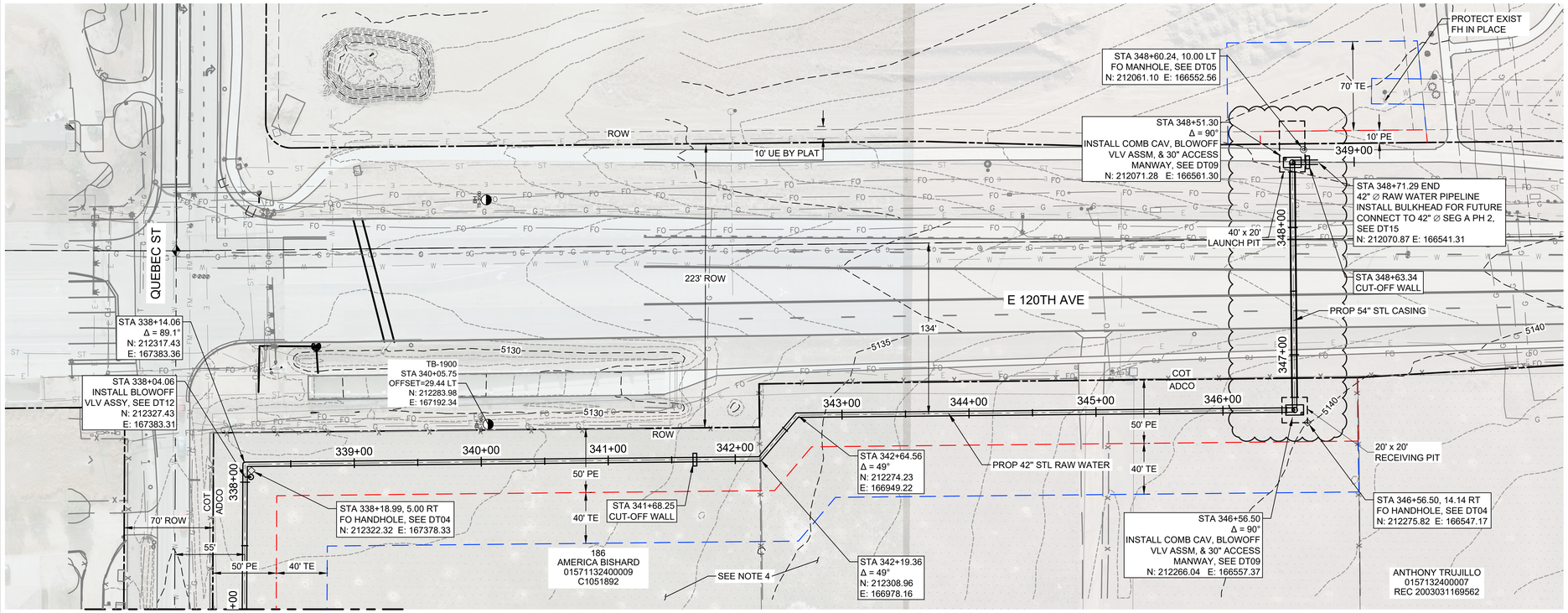

MATCHLINE - SEE SHEET 63

N

SUE LEVEL A UTILITY LOCATIONS STILL IN PROGRESS. EXISTING UTILITIES SUBJECT TO CHANGE.

NOTES:

1. FOR TUNNEL DETAILS, REFER TO DT27-DT29 AND IM01-IM11.
2. SPECIFICATION SECTION 31 71 00 TUNNEL EXCAVATION AND INITIAL SUPPORT PROVIDE THE ACCEPTABLE TUNNELING TECHNIQUES, THE MINIMUM SPECIFIED CASING PIPE THICKNESS, AND THE CASING PIPE INSTALLATION TOLERANCES.
3. GEOTECHNICAL BORE LOGS IN PROFILE ARE SHOWN FOR INFORMATION ONLY. PLEASE REFER TO GBR/GDR AND SHEETS DTXX-DTXX. BORE LOCATIONS OFFSET FROM THE ALIGNMENT MAY NOT BE AT EXISTING GROUND LEVEL IN THE PROFILE.
4. PRAIRIE DOG COLONY IN THIS AREA - CONTRACTOR SHALL CONTACT ERO ONE MONTH PRIOR TO CONSTRUCTION TO COMPLETE BURROWING OWL SURVEY. PASSIVE DISPERSAL AND/OR EUTHANIZATION PER SECTION 01 11 00 SUMMARY OF WORK.

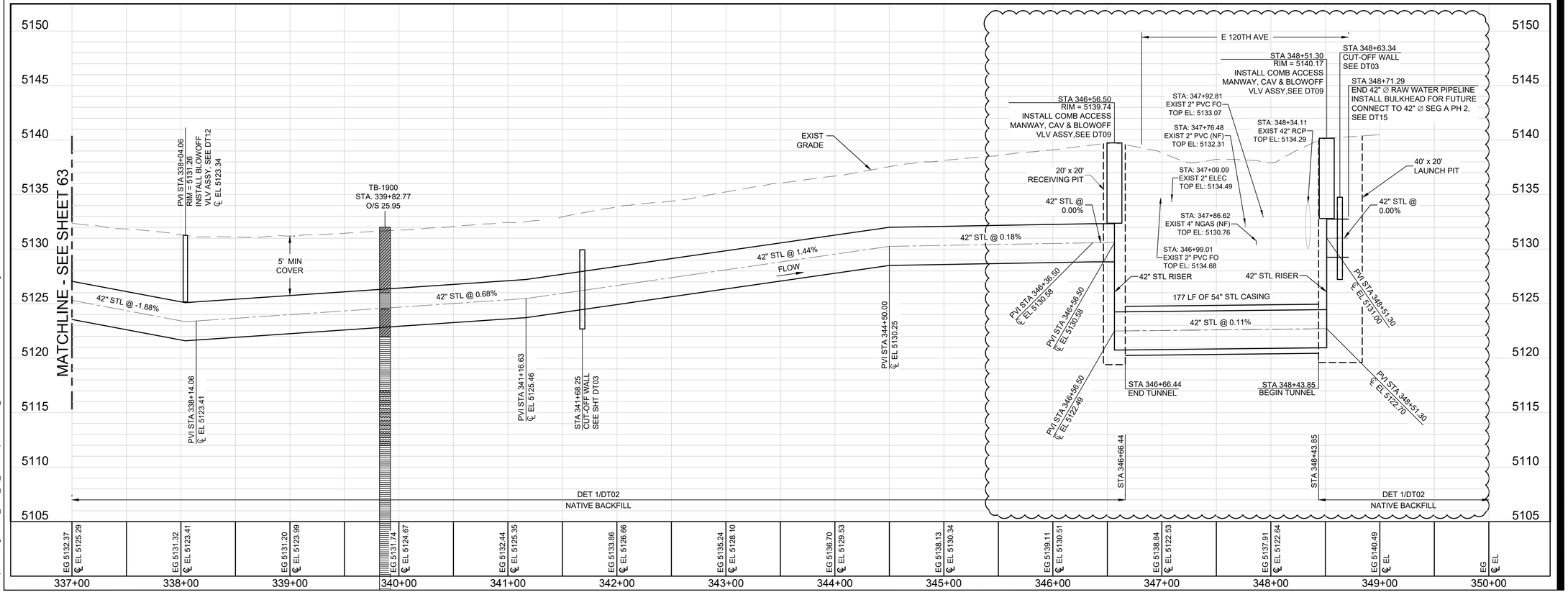

c:\pwworking\aecom_ds20_na_2019\stephen.muller@aecom.com\d0105069\PNP-C-4.dwg

AECOM

Thornton WATER PROJECT

TWP SEG A, PHASE 1
PROJECT No. 12-777H5

CLIENT

CITY OF THORNTON
12450 WASHINGTON ST,
THORNTON, CO 80241
720.977.6700 tel 000.000.0000 fax
www.thorntonwaterproject.com

CONSULTANT

AECOM
7595 TECHNOLOGY WAY, STE 200
DENVER, CO 80237
T 303.694.2770 F 303.694.3946
www.aecom.com

ISSUE/REVISION

I/R	DATE	DESCRIPTION
E	10/15/2021	PRE-FINAL SUBMITTAL
C	04/27/2021	75% SUBMITTAL
B	09/25/2020	35% FINAL SUBMITTAL
A	04/21/2020	35% SUBMITTAL

VERIFIED SCALES

0 50 100
SCALE: HORIZ. 1"=50'
VERT. 1"=5'

BAR IS ONE INCH ON ORIGINAL DRAWING
0 1"
IF NOT ONE INCH ON THIS SHEET, ADJUST SCALES ACCORDINGLY

DRAWN BY:	SEM/JEC
CHKD BY:	MG
CHKD BY:	CAT
APPD BY:	WEW

PROJECT NUMBER

60619101

SHEET TITLE

PLAN & PROFILE STA 337+00 TO END

SHEET NUMBER

PP35

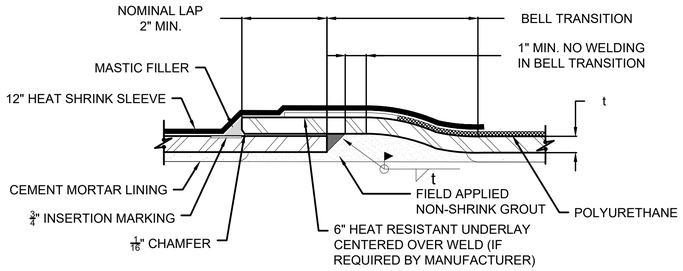

SINGLE LAP WELD FIELD JOINT
STEEL PIPE W/ CEMENT MORTAR LINING AND FLEXIBLE COATING (1 / DT01)

NOT TO SCALE

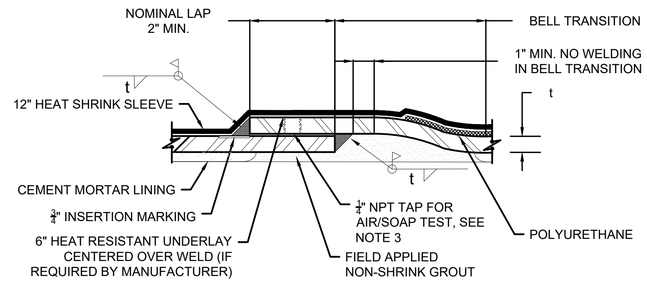

DOUBLE LAP WELD FIELD JOINT
STEEL PIPE W/ CEMENT MORTAR LINING AND FLEXIBLE COATING (2 / DT01)

NOT TO SCALE

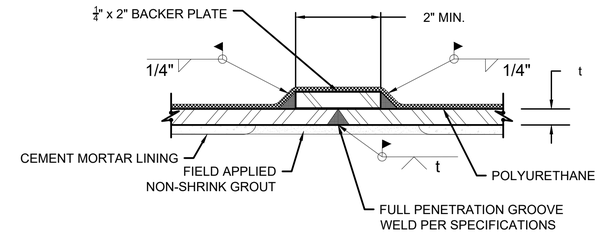

BUTT WELD FIELD JOINT
STEEL PIPE W/ CEMENT MORTAR LINING AND FLEXIBLE COATING (3 / DT01)

NOT TO SCALE

NOTES:

1. FIELD WELD IN ACCORDANCE WITH SPECIFICATIONS.
2. PROVIDE NECESSARY COATING AND LINING HOLD BACK FOR FIELD WELDING IN ACCORDANCE WITH SPECIFICATIONS.
3. AIR TEST JOINT BETWEEN THE TWO FILLET WELDS TO 40 PSI. PAINT WELDS WITH SOAP SOLUTION AND MARK LEAKS INDICATED BY ESCAPING GAS BUBBLES AND REPAIR. CLOSE THREADED OPENINGS WITH FLUSH PIPE PLUGS OR BY PLUG WELDING THEM. PERFORM TEST PER AWWA C206 REQUIREMENTS .

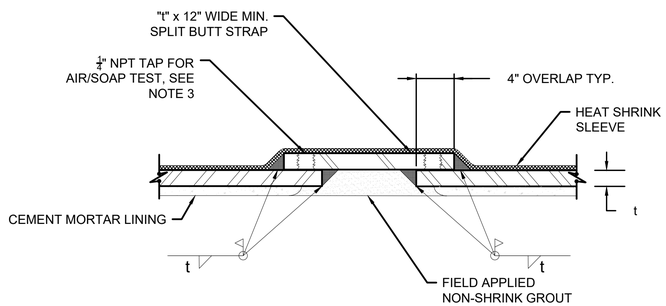

CLOSURE PIECE
STEEL PIPE W/ CEMENT MORTAR LINING AND FLEXIBLE COATING (4 / DT01)

NOT TO SCALE

NOTES:

1. FIELD WELD IN ACCORDANCE WITH SPECIFICATIONS.
2. PLACE FIELD APPLIED NON SHRINK GROUT AFTER WELDING AND AIR/SOAP TEST.
3. WELD SIZE SHALL MATCH THICKNESS OF BUT STRAP AND CARRIER PIPE, OR AS RECOMMENDED BY THE PIPE MANUFACTURER.
4. NO ANGULAR DEFLECTION.

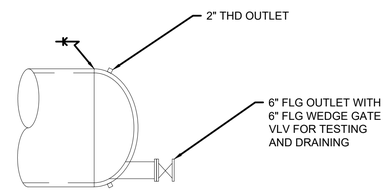

NOTE:
TEMPORARY TEST PLUG AND WELDS SHALL BE DESIGNED TO RESIST THE DESIGNATED TEST PRESSURE.

BULKHEAD DETAIL (5 / DT01)

NOT TO SCALE

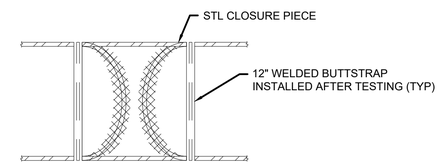

NOTE:
1. AFTER HYDROSTATIC TEST HAS BEEN ACCEPTED, ON BOTH PIPES, PROVIDE PIPE FOR FINAL CONNECTION. PROVIDE A BUTTSTRAP ON BOTH ENDS. PROVIDE AIR TESTING PORT TO TEST PIPE JOINTS.
2. FINAL CONNECTING PIECE OF PIPE TO HAVE SAME COATING AND LINING AS ADJACENT PIPE(S).
3. REMOVE ENTIRE DISHED HEAD, INCLUDING ANY LAP JOINT CONNECTION OF THE DISHED HEAD TO THE PIPE BARREL. CUT MINIMUM 3-INCHES FROM WELD TO DISHED HEAD

BULKHEAD CONNECTION TO OTHER TWP 42"
WATERLINE SEGMENTS - DETAIL (6 / DT01)

NOT TO SCALE

AECOM

Thornton WATER PROJECT

TWP SEG A, PHASE 1
PROJECT No. 12-777H5

CLIENT

CITY OF THORNTON
12450 WASHINGTON ST,
THORNTON, CO 80241
720.977.6700 tel 000.000.0000 fax
www.thorntonwaterproject.com

CONSULTANT

AECOM
7595 TECHNOLOGY WAY, STE 200
DENVER, CO 80237
T 303.694.2770 F 303.694.3946
www.aecom.com

ISSUE/REVISION

I/R	DATE	DESCRIPTION
E	10/15/2021	PRE-FINAL SUBMITTAL
C	04/27/2021	75% SUBMITTAL
B	09/25/2020	35% FINAL SUBMITTAL
A	04/21/2020	35% SUBMITTAL

VERIFIED SCALES

0 20 40
SCALE:1"=20'

BAR IS ONE INCH ON ORIGINAL DRAWING
0 1"
IF NOT ONE INCH ON THIS SHEET, ADJUST SCALES ACCORDINGLY

DRAWN BY:	SEM/JEC
CHKD BY:	MG
CHKD BY:	CAT
APPD BY:	WEW

PROJECT NUMBER

60619101

SHEET TITLE

STEEL PIPE DETAILS

SHEET NUMBER

DT01 65 OF 216

NOTES:

1. REFER TO TRENCHING AND BACKFILLING FOR UTILITIES SPECIFICATION 31 23 33.13 FOR TRENCH BOX/SHORING REQUIREMENTS OR SLOPE TRENCH WALLS IN ACCORDANCE WITH CURRENT OSHA REQUIREMENTS.
2. INSTALL MARKING TAPE 8 TO 12" ABOVE TOP OF PIPE AND HDPE CONDUITS AT CENTERLINE, AS SHOWN. INSTALL TRACER WIRE FOR BOTH THE PIPE AND THE HDPE CONDUITS.
3. OVER EXCAVATE AND USE STABILIZATION MATERIAL WHEN WET AND UNSUITABLE OR UNEXPECTED TRENCH CONDITIONS ARE FOUND DURING CONSTRUCTION.
4. PIPE EMBEDMENT ZONE MUST BE FILLED AND RECOMPACTED TO SPECIFIED DENSITIES UPON REMOVAL OR MOVEMENT OF TRENCH SAFETY SYSTEM.
5. USE POLYETHYLENE WRAP AS BOND BREAKER BETWEEN CONCRETE OR C.L.S.M. AND PIPE, BOLTS, AND FLANGES.
6. INSTALL THREE (3) FLEXIBLE HDPE CONDUITS MANUFACTURED ACCORDING TO SPECIFICATION 26 05 33 AND MEETING UL651A. CONDUITS SHALL BE SDR-11 RIBBED INTERIOR/SMOOTH EXTERIOR TYPE, NOMINAL 2-INCH INSIDE DIAMETER. CONDUIT INSTALLATION LOCATION MAY DEVIATE FROM STANDARD DETAILS WHERE FUTURE DITCH, FLOODPLAIN, OR CULVERT CROSSINGS ARE ANTICIPATED. REFER TO PLAN AND PROFILE DRAWINGS AND DETAIL 3/DT04 FOR MORE INFORMATION.
7. ADJUST HEIGHT OF UNSUPPORTED TRENCH AS NEEDED FOR SAFE CONDITIONS IN ACCORDANCE WITH CURRENT OSHA REQUIREMENTS.
8. MAXIMUM PAVEMENT DISTURBANCE WIDTH FOR WATERLINE INSTALLATION SHALL BE 12 FEET, UNLESS OTHERWISE APPROVED.
9. SEE SPECIFICATIONS FOR SAW CUT REQUIREMENTS.
10. CLSM BACKFILL REQUIRED AT OPEN-CUT PERPENDICULAR ROAD CROSSINGS.
11. INSTALL ORANGE HDPE FENCE ACROSS ENTIRE TRENCH WIDTH, OVERLAP ENDS MIN. OF 4 FEET.
12. REFER TO PROFILE IN PLAN AND PROFILE DRAWINGS FOR WHERE TO USE EACH EXCAVATION AND BACKFILL DETAIL.

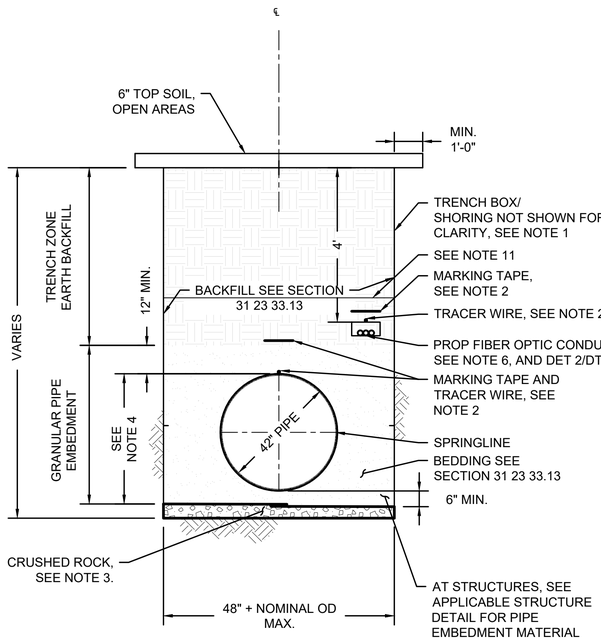

TYPICAL EXCAVATION AND BEDDING/BACKFILL DETAIL (UNPAVED OPEN AREAS) — 1 / DT02

NOT TO SCALE

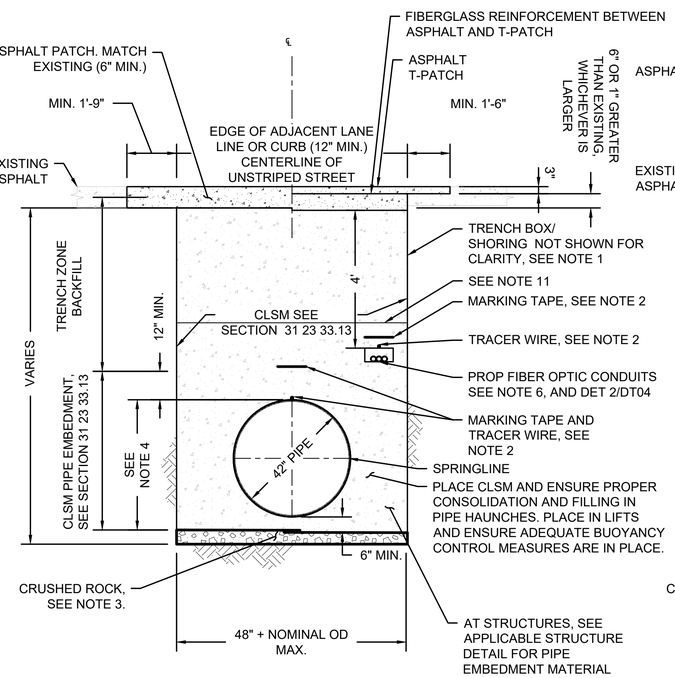

TYPICAL EXCAVATION AND CLSM BEDDING DETAIL (OPTION 1: PERPENDICULAR ROAD CROSSINGS) — 2 / DT02

NOT TO SCALE

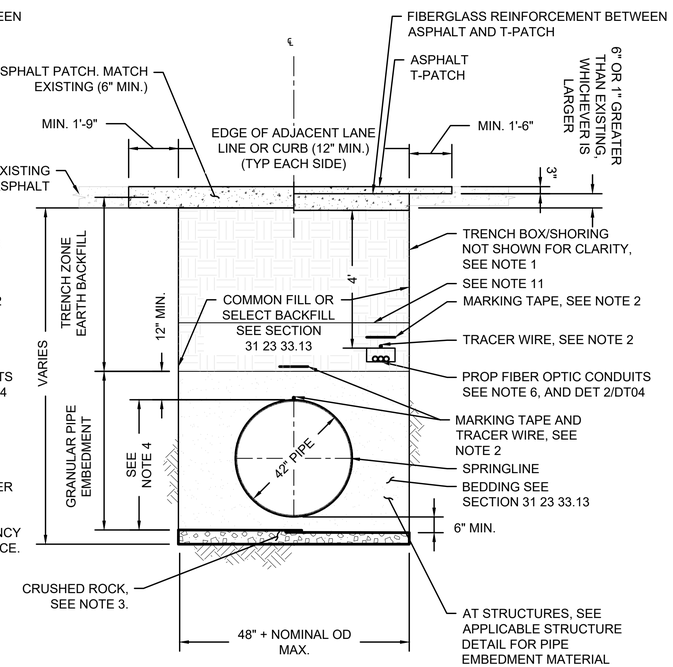

TYPICAL EXCAVATION AND BEDDING/BACKFILL DETAIL (OPTION 2: NON-PERPENDICULAR ROAD CROSSINGS) — 3 / DT02

NOT TO SCALE

AECOM

Thornton WATER PROJECT

TWP SEG A, PHASE 1
PROJECT No. 12-777H5

CLIENT

CITY OF THORNTON
12450 WASHINGTON ST,
THORNTON, CO 80241
720.977.6700 tel 000.000.0000 fax
www.thorntonwaterproject.com

CONSULTANT

AECOM
7595 TECHNOLOGY WAY, STE 200
DENVER, CO 80237
T 303.694.2770 F 303.694.3946
www.aecom.com

ISSUE/REVISION

I/R	DATE	DESCRIPTION
E	10/15/2021	PRE-FINAL SUBMITTAL
C	04/27/2021	75% SUBMITTAL
B	09/25/2020	35% FINAL SUBMITTAL
A	04/21/2020	35% SUBMITTAL

VERIFIED SCALES

BAR IS ONE INCH ON ORIGINAL DRAWING
0 1"
IF NOT ONE INCH ON THIS SHEET, ADJUST SCALES ACCORDINGLY

DRAWN BY:	SEM/JEC
CHKD BY:	MG
CHKD BY:	CAT
APPD BY:	WEW

PROJECT NUMBER

60619101

SHEET TITLE

STEEL PIPE EXCAVATION AND BACKFILL DETAILS

SHEET NUMBER

DT02

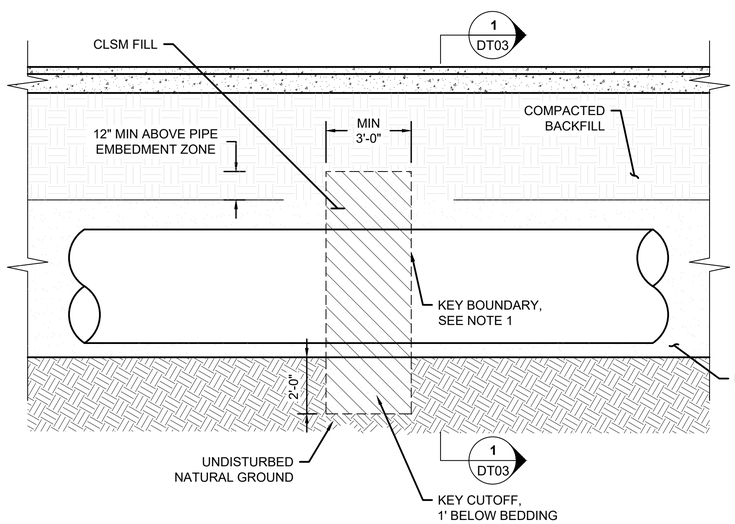

CLSM CUT-OFF WALL DETAILS (1 / DT03)
NOT TO SCALE

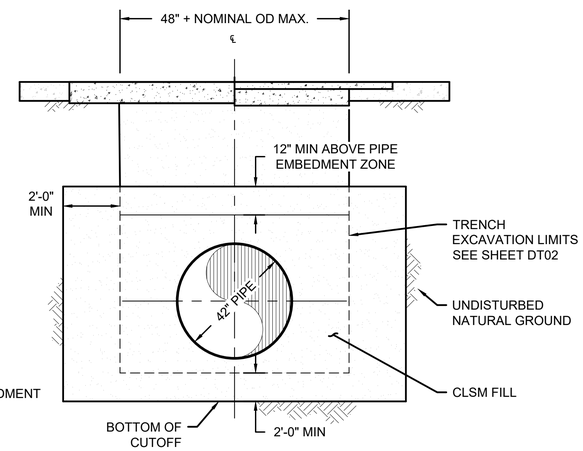

CLSM CUT-OFF WALL DETAILS (2 / DT03)
NOT TO SCALE

NOTES:

1. KEY CUTOFF WALL 2'-0" INTO UNDISTURBED MATERIAL ON BOTH SIDES AND BOTTOM.
2. CLSM CUTOFF WALL SHALL BE PLACED AT LEAST 5 FEET AWAY FROM ANY WATERLINE STRUCTURES.

AECOM

Thornton WATER PROJECT

TWP SEG A, PHASE 1
PROJECT No. 12-777H5

CLIENT

CITY OF THORNTON
12450 WASHINGTON ST,
THORNTON, CO 80241
720.977.6700 tel 000.000.0000 fax
www.thorntonwaterproject.com

CONSULTANT

AECOM
7595 TECHNOLOGY WAY, STE 200
DENVER, CO 80237
T 303.694.2770 F 303.694.3946
www.aecom.com

ISSUE/REVISION

I/R	DATE	DESCRIPTION
E	10/15/2021	PRE-FINAL SUBMITTAL
C	04/27/2021	75% SUBMITTAL
B	09/25/2020	35% FINAL SUBMITTAL
A	04/21/2020	35% SUBMITTAL

VERIFIED SCALES

BAR IS ONE INCH ON ORIGINAL DRAWING
0 1"
IF NOT ONE INCH ON THIS SHEET, ADJUST SCALES ACCORDINGLY

DRAWN BY:	SEM/JEC
CHKD BY:	MG
CHKD BY:	CAT
APPD BY:	WEW

PROJECT NUMBER

60619101

SHEET TITLE

CLSM CUT-OFF WALL DETAILS

SHEET NUMBER

DT03

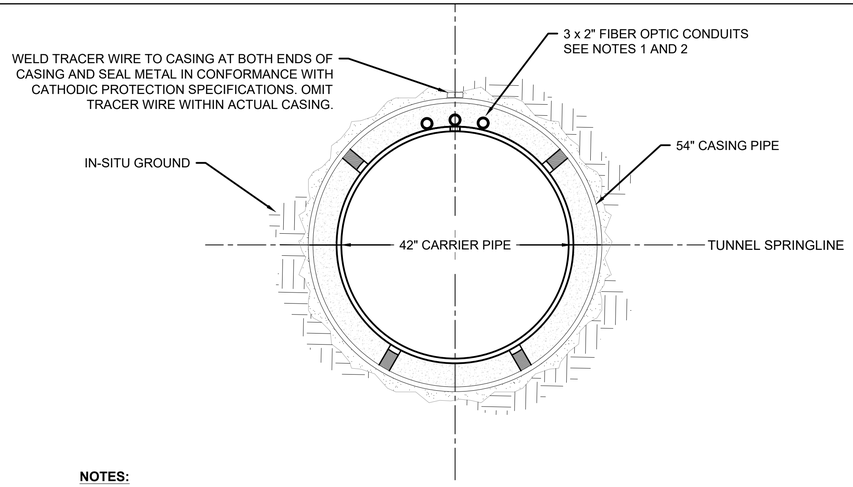

NOTES:

1. INSTALL THREE (3) FLEXIBLE HDPE CONDUITS MANUFACTURED ACCORDING TO ASTM F2160 AND MEETING UL651A. CONDUITS SHALL BE SDR-11 RIBBED INTERIOR/SMOOTH EXTERIOR TYPE, NOMINAL 2-INCH INSIDE DIAMETER. REFER TO SPECIFICATION SECTION 26 05 33 - RACEWAYS, BOXES, SEALS AND FITTINGS FOR ELECTRICAL SYSTEMS FOR MORE INFORMATION.
2. MINIMIZE TOTAL BEND ANGLE OF FIBER OPTIC CONDUIT. DO NOT PROVIDE SHARP ANGLES. NOR CONDUIT THAT HAS CANCELLING ANGLES WITHIN 20 FEET OF ANOTHER BEND.

TUNNEL CROSS SECTION - STEEL PIPE OR LINER PLATE (1 / DT04)
NOT TO SCALE

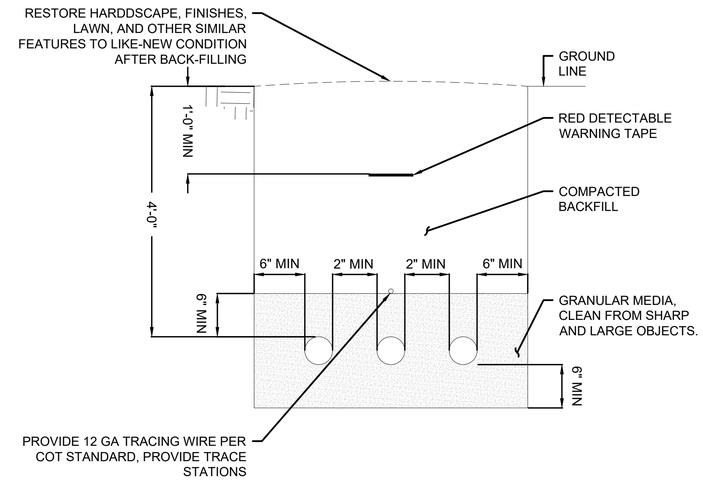

FIBER OPTIC TRENCH INSTALLATION (2 / DT04)
NOT TO SCALE

COVER FEATURES:

*20,800 LBS. WHEEL LOAD ON 10"x20" PLATE
*3/8"x3 1/2" SS HEX HEAD FASTENERS
*2 BOLT DOWNS
*STAINLESS STEEL BOX INSERTS
*POLYMER CONCRETE CONSTRUCTION
*NON-SKID SURFACE (STANDARD)
*REFERENCE SPECIFICATIONS FOR ADDITIONAL REQUIREMENTS

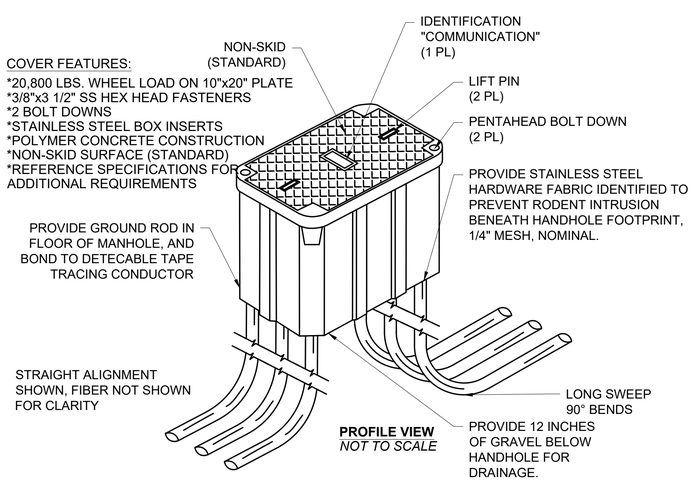

PROFILE VIEW
NOT TO SCALE

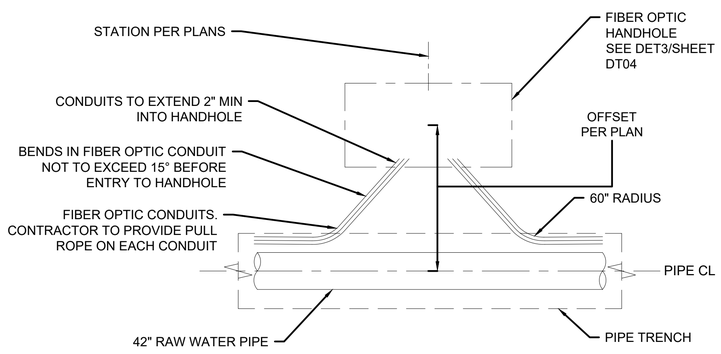

STRAIGHT PIPE RUN PLAN HANDHOLE ALIGNMENT (4 / DT04)
NOT TO SCALE

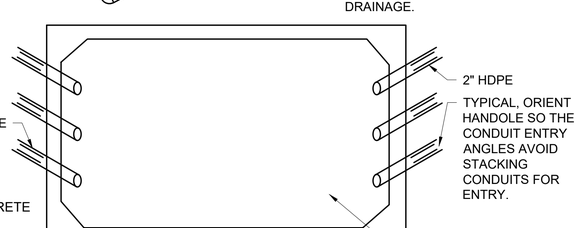

BOX FEATURES:

*POLYMER CONCRETE CONSTRUCTION
*LIGHTWEIGHT
*STACKABLE
*APPROX. WEIGHT 300 LBS.

TYPE 1 FIBER OPTICS HANDHOLE (UNPAVED AREAS ONLY) (3 / DT04)
NOT TO SCALE

AECOM

Thornton WATER PROJECT

TWP SEG A, PHASE 1
PROJECT No. 12-777H5

CLIENT

CITY OF THORNTON
12450 WASHINGTON ST,
THORNTON, CO 80241
720.977.6700 tel 000.000.0000 fax
www.thorntonwaterproject.com

CONSULTANT

AECOM
7595 TECHNOLOGY WAY, STE 200
DENVER, CO 80237
T 303.694.2770 F 303.694.3946
www.aecom.com

ISSUE/REVISION

I/R	DATE	DESCRIPTION
E	10/15/2021	PRE-FINAL SUBMITTAL
C	04/27/2021	75% SUBMITTAL
B	09/25/2020	35% FINAL SUBMITTAL
A	04/21/2020	35% SUBMITTAL

VERIFIED SCALES

BAR IS ONE INCH ON ORIGINAL DRAWING
0 1"
IF NOT ONE INCH ON THIS SHEET, ADJUST SCALES ACCORDINGLY

DRAWN BY:	SEM/JEC
CHKD BY:	MG
CHKD BY:	CAT
APPD BY:	WEW

PROJECT NUMBER
60619101

SHEET TITLE
FIBER OPTIC DETAILS 1

SHEET NUMBER
DT04 68 OF 216

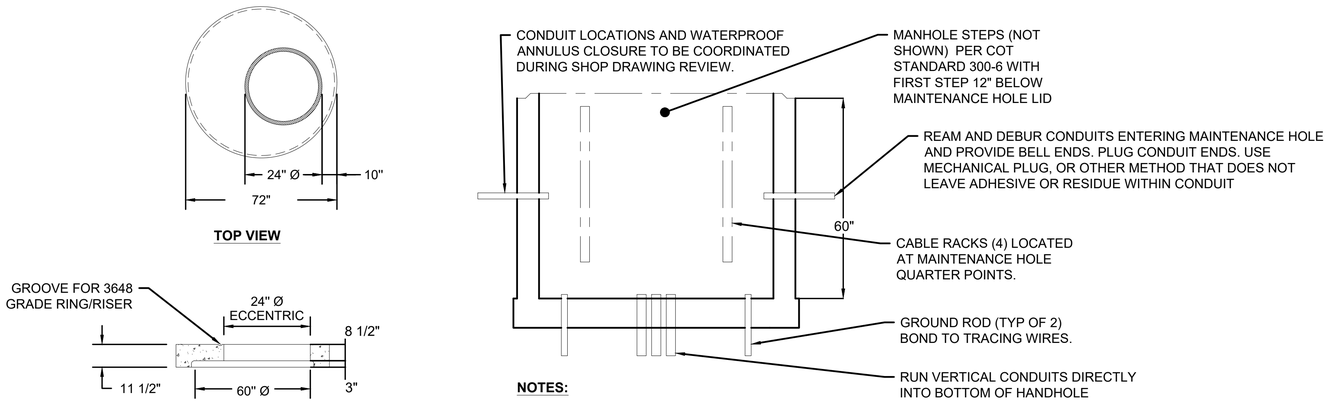

NOTES:

1. CONCRETE MAINTENANCE HOLE COMPONENTS CONFORM TO ASTM C-478 AND AASHTO M199.
2. FLAT TOPS AND BASE SLABS ARE DESIGNED FOR AASHTO HS-20 WHEEL LOADING.
3. MAINTENANCE HOLES MUST BE FACTORY WATERPROOF.

FIBER OPTICS MAINTENANCE HOLE — 1 / DT05

(PAVED AND HEAVY TRAFFIC AREAS, AND AT VERTICAL SHAFTS)

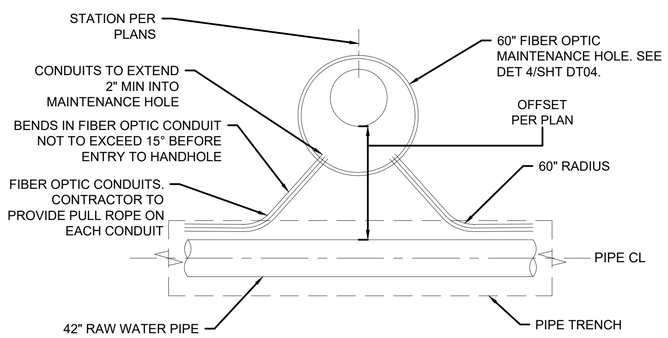

STRAIGHT PIPE RUN PLAN
MAINTENANCE HOLE ALIGNMENT — 2 / DT05

NOT TO SCALE

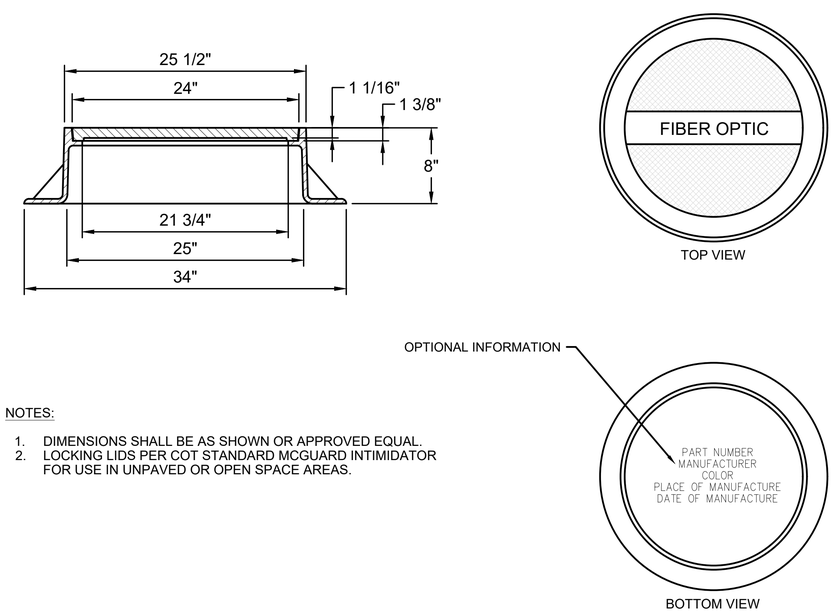

NOTES:

1. DIMENSIONS SHALL BE AS SHOWN OR APPROVED EQUAL.
2. LOCKING LIDS PER COT STANDARD MCGUARD INTIMIDATOR FOR USE IN UNPAVED OR OPEN SPACE AREAS.

24" HEAVY DUTY MANHOLE RING AND COVER — 3 / DT05

NOT TO SCALE

AECOM

Thornton WATER PROJECT

TWP SEG A, PHASE 1
PROJECT No. 12-777H5

CLIENT

CITY OF THORNTON
12450 WASHINGTON ST,
THORNTON, CO 80241
720.977.6700 tel 000.000.0000 fax
www.thorntonwaterproject.com

CONSULTANT

AECOM
7595 TECHNOLOGY WAY, STE 200
DENVER, CO 80237
T 303.694.2770 F 303.694.3946
www.aecom.com

ISSUE/REVISION

I/R	DATE	DESCRIPTION
E	10/15/2021	PRE-FINAL SUBMITTAL
C	04/27/2021	75% SUBMITTAL
B	09/25/2020	35% FINAL SUBMITTAL
A	04/21/2020	35% SUBMITTAL

VERIFIED SCALES

BAR IS ONE INCH ON ORIGINAL DRAWING
0 1"
IF NOT ONE INCH ON THIS SHEET, ADJUST SCALES ACCORDINGLY

DRAWN BY:	SEM/JEC
CHKD BY:	MG
CHKD BY:	CAT
APPD BY:	WEW

PROJECT NUMBER

60619101

SHEET TITLE

FIBER OPTIC DETAILS 2

SHEET NUMBER

DT05

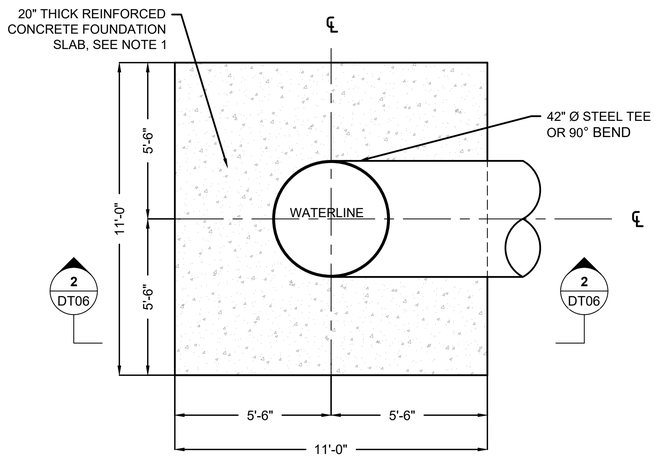

VERTICAL DROP SHAFT FOUNDATION - PLAN (1 / DT06)

NOT TO SCALE

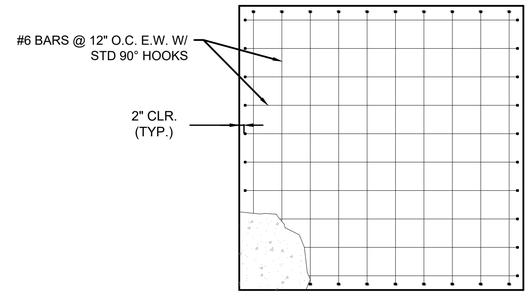

DROP SHAFT FOUNDATION - TOP REINFORCEMENT (3 / DT06)

NOT TO SCALE

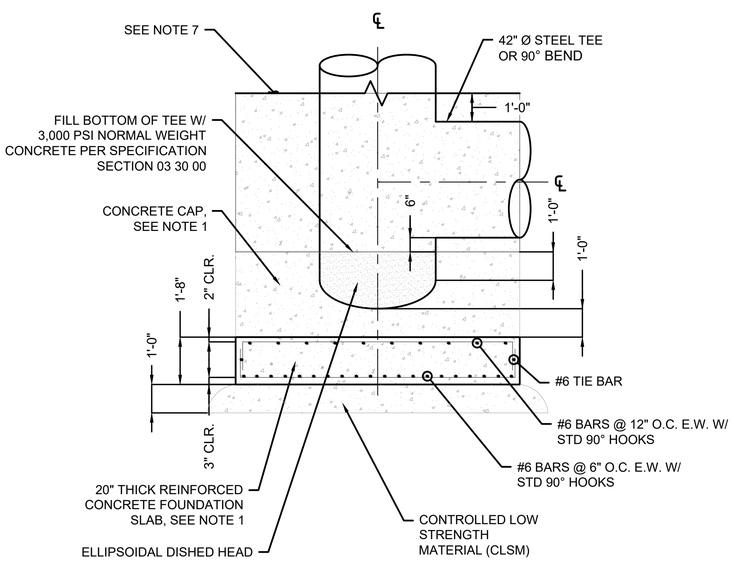

VERTICAL DROP SHAFT FOUNDATION - SECTION (2 / DT06)

NOT TO SCALE

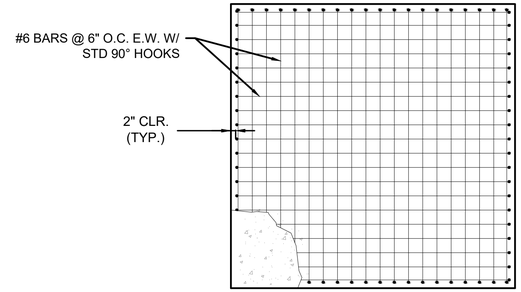

DROP SHAFT FOUNDATION - BOTTOM REINFORCEMENT (4 / DT06)

NOT TO SCALE

NOTES:

1. ALL STRUCTURAL CONCRETE SHALL BE NORMAL WEIGHT CONCRETE AND HAVE MINIMUM f'c OF 4,500 PSI IN ACCORDANCE WITH SECTION 03 30 00, UNLESS OTHERWISE NOTED.
2. ALL REINFORCEMENT SHALL BE ASTM A615, GRADE 60, IN ACCORDANCE WITH THE SPECIFICATION.
3. 42" TEE SHALL BE MIN. 0.5 INCHES THICK, SHOP LINED AND COATED TO MATCH THE PIPE.
4. ELLIPSOIDAL DISHED HEAD PLUG SHALL BE DESIGNED IN ACCORDANCE WITH ASME BOILER AND PRESSURE VESSEL CODE, SECTION VIII, DIVISION 1, LATEST EDITION. SUBMIT DESIGN CALCULATIONS AND DETAIL FOR REVIEW.
5. ELLIPSOIDAL DISHED HEAD PLUG SHALL BE MIN. 0.5 INCHES THICK, SHOP LINED AND COATED TO MATCH THE PIPE.
6. CONTRACTOR SHALL ENSURE PIPE REMAINS ELECTRICALLY ISOLATED FROM REINFORCEMENT, STANDEES, OR OTHER METALLIC ITEMS. MAINTAIN A MINIMUM 3" CLEARANCE BETWEEN PIPE AND ANY METALLIC ITEM.
7. PLACE CLSM (100 PSI MIN.) FROM BOTTOM OF SHAFT TO 12" ABOVE TOP OF PIPE. ENSURE PROPER CONSOLIDATION AND FILLING OF CLSM IN PIPE HAUNCHES. SEE PLAN AND PROFILE DRAWINGS FOR LIMITS.

AECOM

Thornton WATER PROJECT

TWP SEG A, PHASE 1
PROJECT No. 12-777H5

CLIENT

CITY OF THORNTON
12450 WASHINGTON ST,
THORNTON, CO 80241
720.977.6700 tel 000.000.0000 fax
www.thorntonwaterproject.com

CONSULTANT

AECOM
7595 TECHNOLOGY WAY, STE 200
DENVER, CO 80237
T 303.694.2770 F 303.694.3946
www.aecom.com

ISSUE/REVISION

I/R	DATE	DESCRIPTION
E	10/15/2021	PRE-FINAL SUBMITTAL
C	04/27/2021	75% SUBMITTAL
B	09/25/2020	35% FINAL SUBMITTAL
A	04/21/2020	35% SUBMITTAL

VERIFIED SCALES

BAR IS ONE INCH ON ORIGINAL DRAWING
0 1"
IF NOT ONE INCH ON THIS SHEET, ADJUST SCALES ACCORDINGLY

DRAWN BY:	SEM/JEC
CHKD BY:	MG
CHKD BY:	CAT
APPD BY:	WEW

PROJECT NUMBER

60619101

SHEET TITLE

VERTICAL DROP SHAFT DETAILS

SHEET NUMBER

DT06

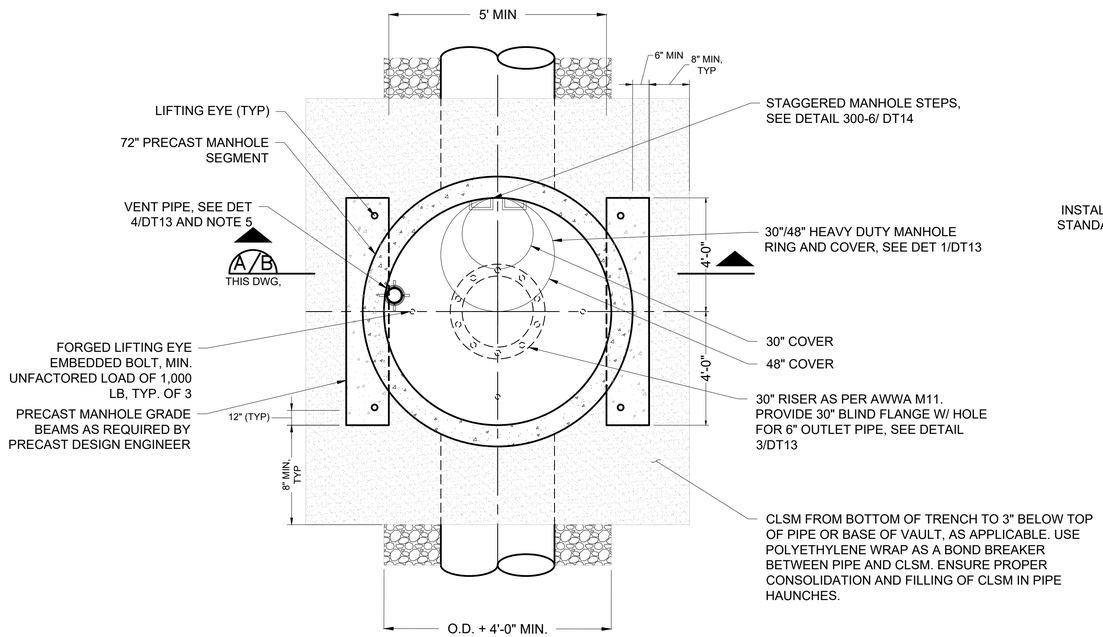

30" ACCESS MANWAY PLAN (1 / DT07)
NOT TO SCALE

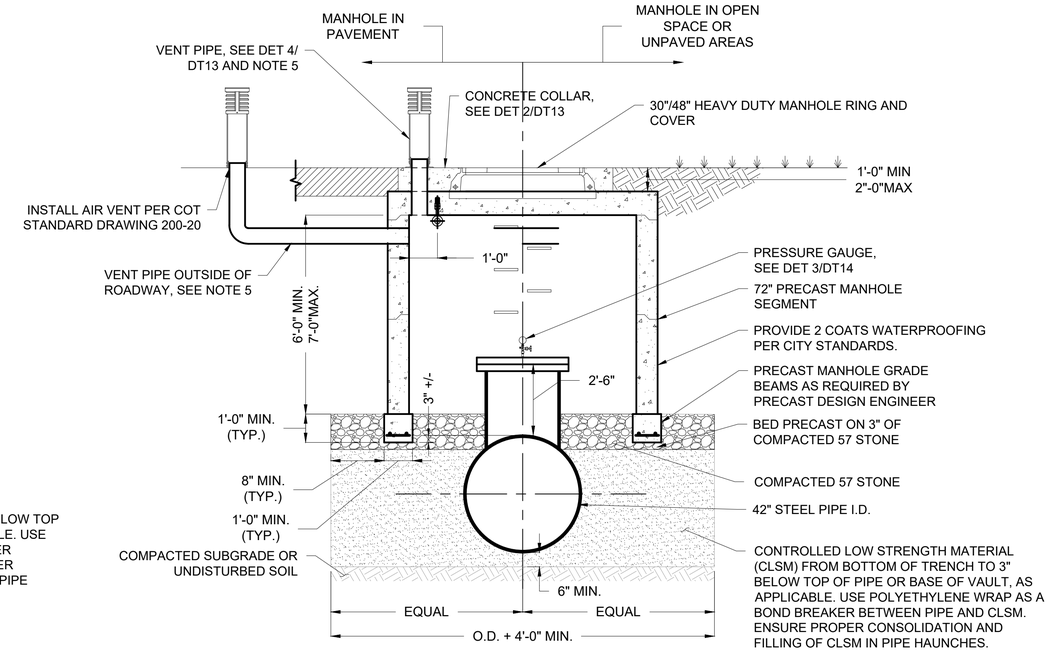

30" ACCESS MANWAY WITH FLAT TOP-SECTION (A / DT07)
NOT TO SCALE

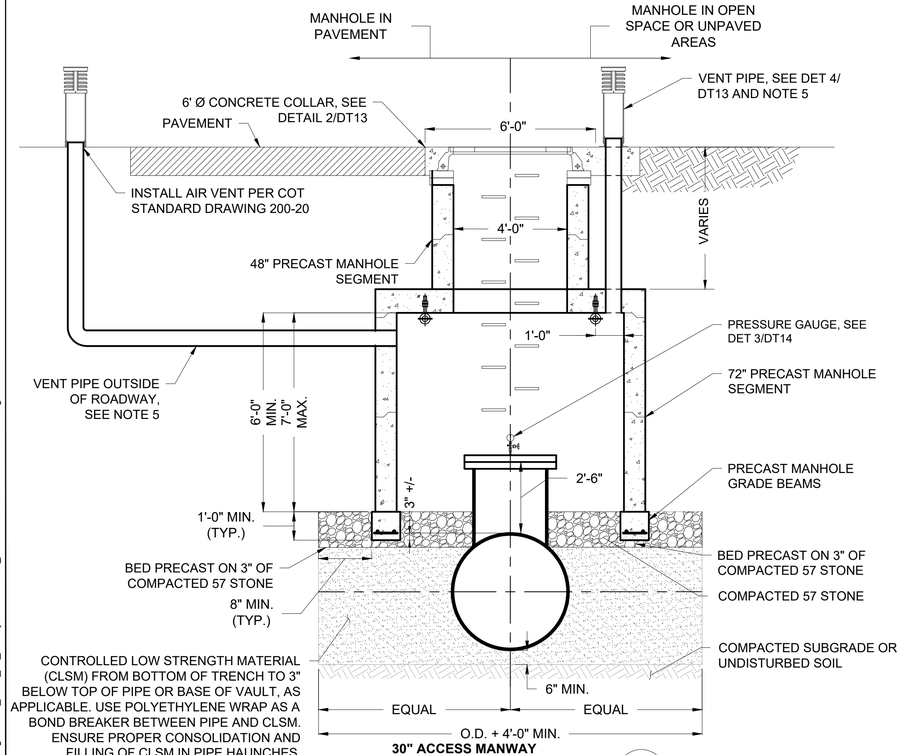

30" ACCESS MANWAY WITH RISER-SECTION (B / DT07)
NOT TO SCALE

NOTES:

1. PROVIDE PREFORMED FLEXIBLE BUTYL JOINT SEALANT OR APPROVED EQUAL BETWEEN PRECAST SEGMENTS OF THE MANHOLE.
2. FIELD COAT ALL BOLTS WITH DENSO TAPE OR ACCEPTED PETROLATUM BASED TAPE.
3. EXPOSED DUCTILE IRON AND STEEL PIPE AND FITTINGS IN VAULT SHALL BE COATED IN ACCORDANCE WITH SECTION 09 90 00.
4. PROVIDE FULLY RESTRAINED PIPE AND FITTINGS IN VAULT.

ACCESS MANWAY LOCATIONS

Number	Station	Flange Sch (SEE DET 3/DT12)	LOCKING LID (SEE DET4/DT14)
1	22+50.00'	A	Y
2	43+50.00'	A	Y
3	81+00.00'	A	Y
4	140+50.00'	A	Y
5	189+75.00'	A	Y
6	209+75.00'	A	Y
7	246+50.00'	A	Y

5. PROVIDE ALTERNATIVE VENT PIPE LOCATION AS NECESSARY FOR VAULTS LOCATED WITHIN ROADWAY.

AECOM

Thornton WATER PROJECT

TWP SEG A, PHASE 1
PROJECT No. 12-777H5

CLIENT

CITY OF THORNTON
12450 WASHINGTON ST,
THORNTON, CO 80241
720.977.6700 tel 000.000.0000 fax
www.thorntonwaterproject.com

CONSULTANT

AECOM
7595 TECHNOLOGY WAY, STE 200
DENVER, CO 80237
T 303.694.2770 F 303.694.3946
www.aecom.com

ISSUE/REVISION

I/R	DATE	DESCRIPTION
E	10/15/2021	PRE-FINAL SUBMITTAL
C	04/27/2021	75% SUBMITTAL
B	09/25/2020	35% FINAL SUBMITTAL
A	04/21/2020	35% SUBMITTAL

VERIFIED SCALES

BAR IS ONE INCH ON ORIGINAL DRAWING
0 1"
IF NOT ONE INCH ON THIS SHEET, ADJUST SCALES ACCORDINGLY

DRAWN BY:	SEM/JEC
CHKD BY:	MG
CHKD BY:	CAT
APPD BY:	WEW

PROJECT NUMBER
60619101

SHEET TITLE
ACCESS MANWAY DETAILS

SHEET NUMBER
DT07

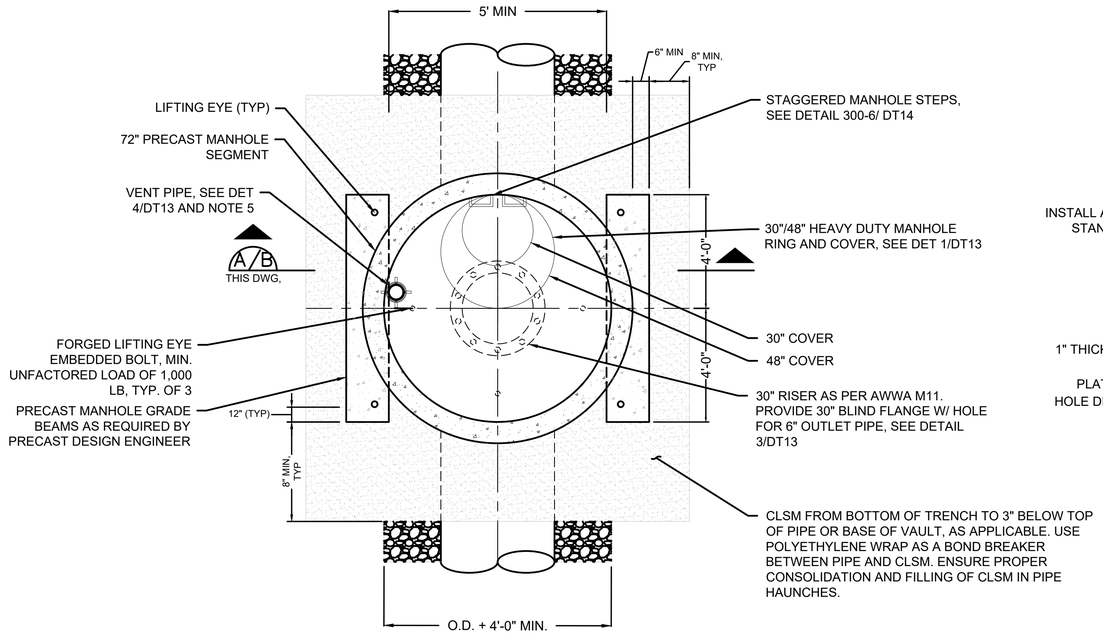

30" COMBINED ACCESS MANWAY AND BLOWOFF ASSEMBLY PLAN (1 / DT08)

NOT TO SCALE

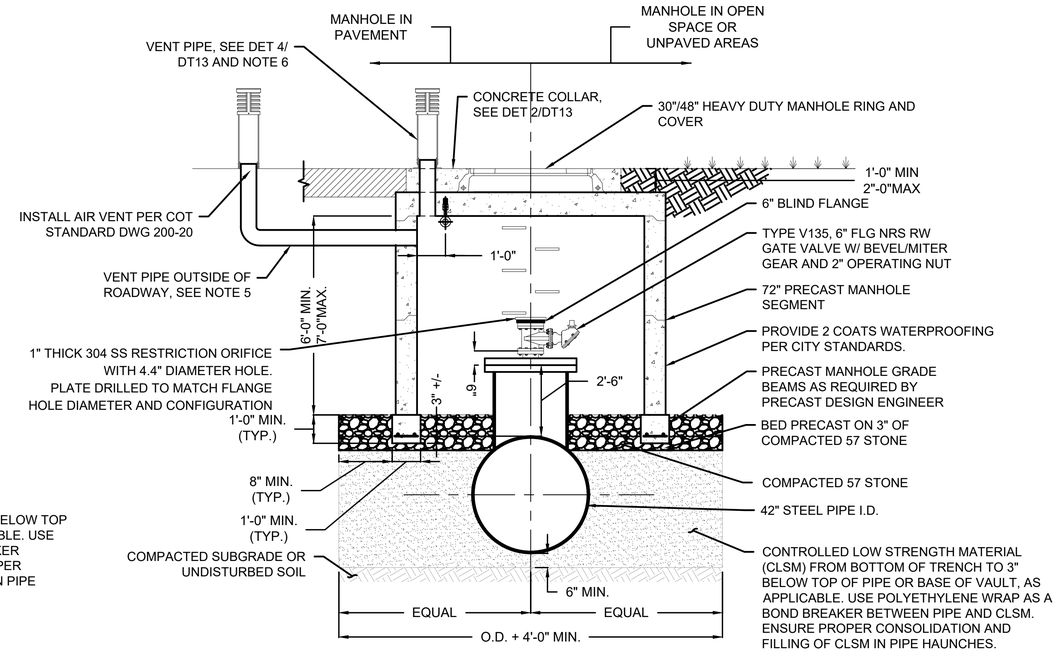

30" COMBINED ACCESS MANWAY AND BLOWOFF ASSEMBLY WITH FLAT TOP- SECTION (A / DT08)

NOT TO SCALE

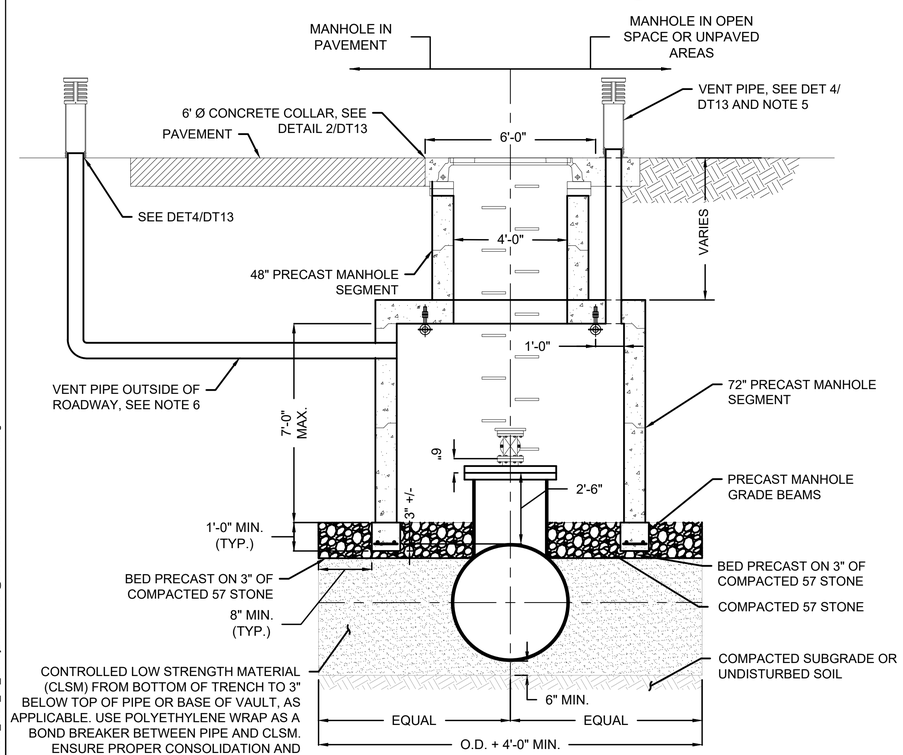

30" COMBINED ACCESS MANWAY AND BLOWOFF ASSEMBLY WITH RISER - SECTION (B / DT08)

NOT TO SCALE

NOTES:

1. PROVIDE PREFORMED FLEXIBLE BUTYL JOINT SEALANT OR APPROVED EQUAL BETWEEN PRECAST SEGMENTS OF THE MANHOLE.
2. FIELD COAT ALL BOLTS WITH DENSO TAPE OR ACCEPTED PETROLATUM BASED TAPE.
3. EXPOSED DUCTILE IRON AND STEEL PIPE AND FITTINGS IN VAULT SHALL BE COATED IN ACCORDANCE WITH SECTION 09 90 00.
4. PROVIDE FULLY RESTRAINED PIPE AND FITTINGS IN VAULT.
5. PROVIDE ALTERNATIVE VENT PIPE LOCATION AS NECESSARY FOR VAULTS LOCATED WITHIN ROADWAY.

THIS STRUCTURE NOT USED IN CURRENT SUBMITTAL. DETAIL RETAINED IN CASE OF FUTURE SUBMITTALS.

AECOM

Thornton WATER PROJECT

TWP SEG A, PHASE 1
PROJECT No. 12-777H5

CLIENT

CITY OF THORNTON
12450 WASHINGTON ST,
THORNTON, CO 80241
720.977.6700 tel 000.000.0000 fax
www.thorntonwaterproject.com

CONSULTANT

AECOM
7595 TECHNOLOGY WAY, STE 200
DENVER, CO 80237
T 303.694.2770 F 303.694.3946
www.aecom.com

ISSUE/REVISION

I/R	DATE	DESCRIPTION
E	10/15/2021	PRE-FINAL SUBMITTAL
C	04/27/2021	75% SUBMITTAL
B	09/25/2020	35% FINAL SUBMITTAL
A	04/21/2020	35% SUBMITTAL

VERIFIED SCALES

BAR IS ONE INCH ON ORIGINAL DRAWING
0 1"
IF NOT ONE INCH ON THIS SHEET, ADJUST SCALES ACCORDINGLY

DRAWN BY:	SEM/JEC
CHKD BY:	MG
CHKD BY:	CAT
APPD BY:	WEW

PROJECT NUMBER

60619101

SHEET TITLE

COMBINED ACCESS MANWAYS AND BLOWOFF ASSEMBLIES

SHEET NUMBER

DT08

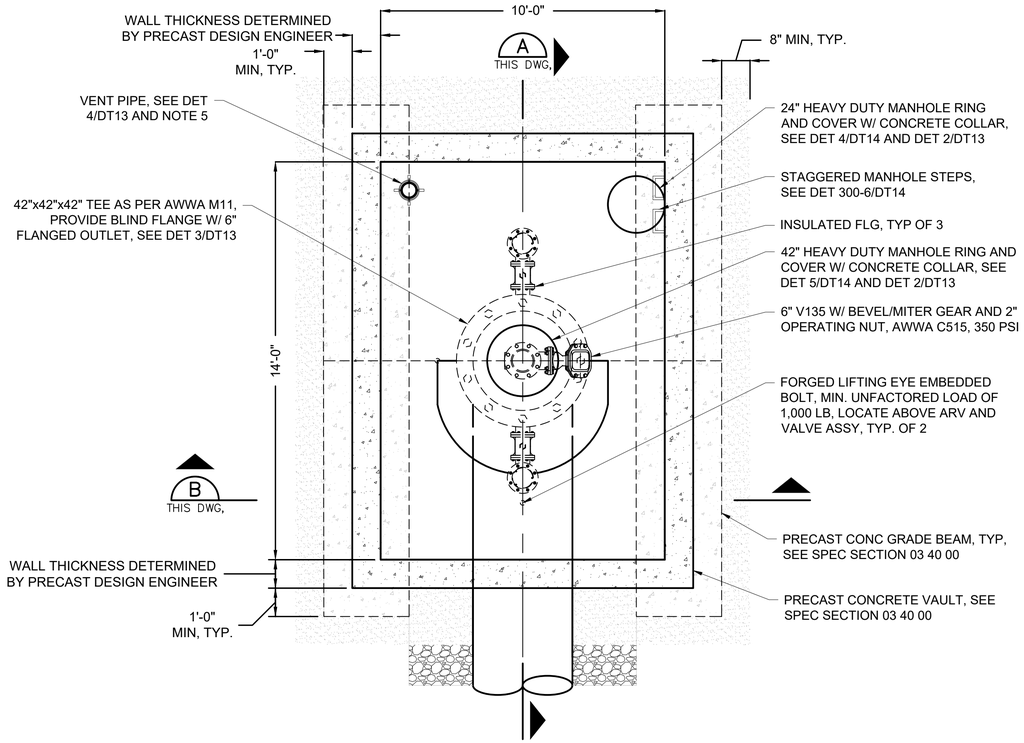

COMBINED ACCESS MANWAY, AIR AND VACUUM VALVE, AND BLOWOFF ASSEMBLY PLAN (1 / DT09)
NOT TO SCALE

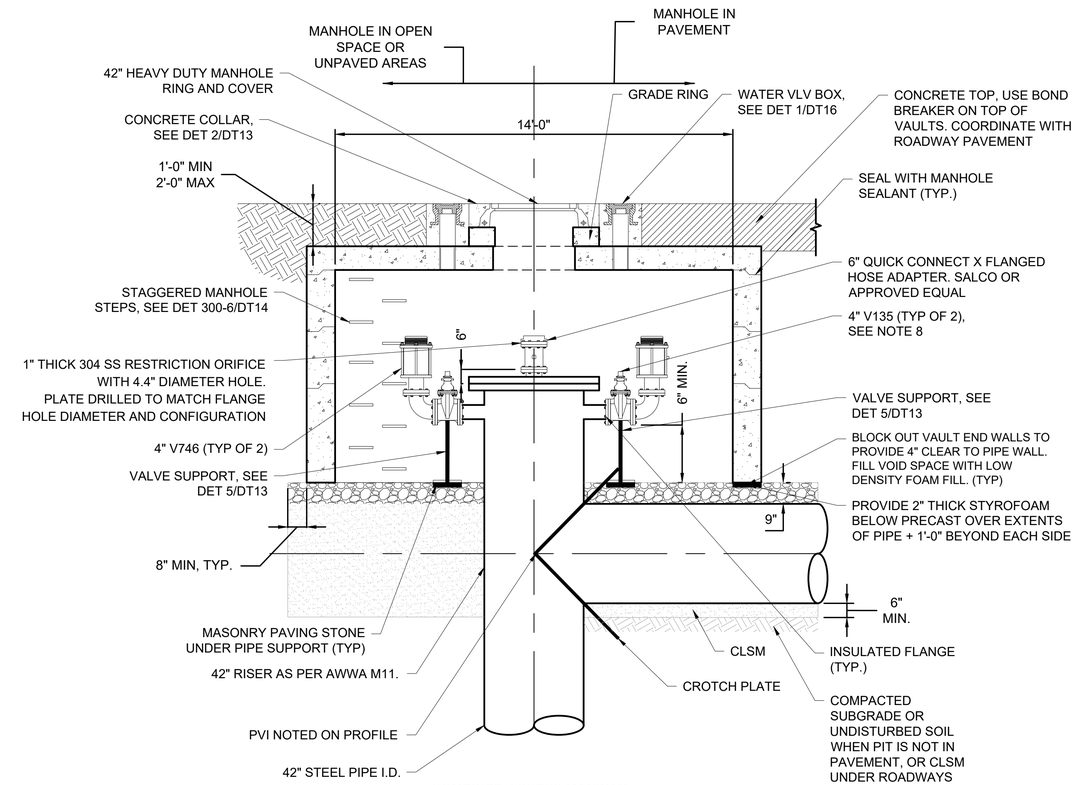

COMBINED ACCESS MANWAY AIR AND VACUUM VALVE, AND BLOWOFF ASSEMBLY WITH FLAT TOP SECTION (A / DT09)
NOT TO SCALE

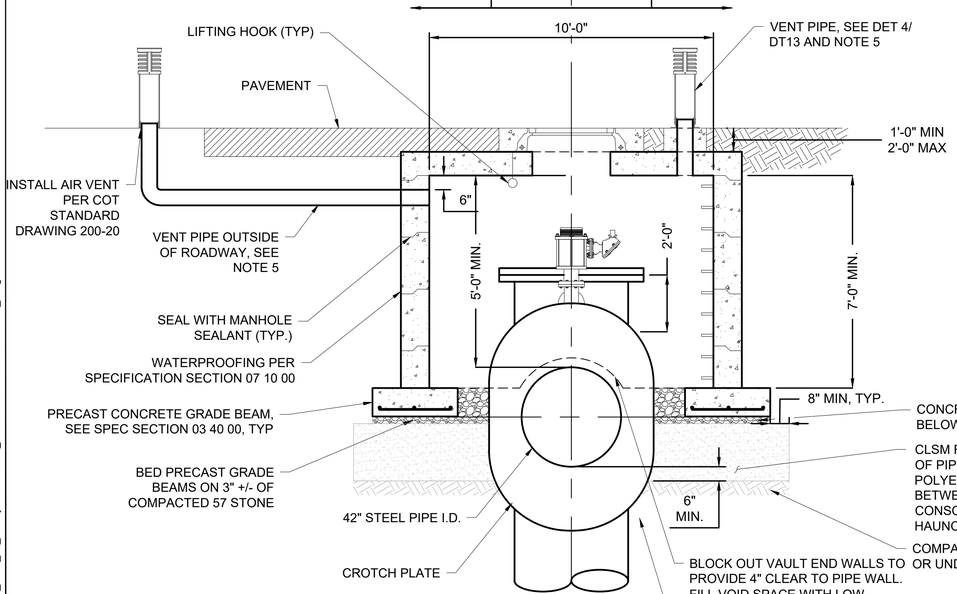

COMBINED ACCESS MANWAY, AIR AND VACUUM VALVE, AND BLOWOFF ASSEMBLY WITH FLAT TOP - SECTION (B / DT09)
NOT TO SCALE

COMBINED ACCESS MANWAY, CAV AND BLOWOFF ASSEMBLY				
Number	Station	Nominal Size	Flange Sch	LOCKING LID (SEE DET4/DT14)
1	3+34.32'	42"	A	Y
2	58+78.62'	42"	A	Y
3	61+23.69'	42"	A	Y
4	98+02.98'	42"	A	Y
5	99+15.66'	42"	A	Y
6	119+02.35'	42"	A	Y
7	120+58.22'	42"	A	Y
8	152+09.23'	42"	A	Y
9	160+69.06'	42"	A	Y
10	265+27.18'	42"	A	Y
11	311+36.18'	42"	A	Y
12	311+94.21'	42"	A	Y
13	346+56.50'	42"	A	Y
14	348+51.30'	42"	A	Y

NOTES:

1. PROVIDE PREFORMED FLEXIBLE BUTYL JOINT SEALANT OR APPROVED EQUAL BETWEEN PRECAST SEGMENTS OF THE MANHOLE.
2. FIELD COAT ALL BOLTS WITH DENSO TAPE OR ACCEPTED PETROLATUM BASED TAPE.
3. DIRECT BURY AND EXPOSED DUCTILE IRON AND STEEL PIPE AND FITTINGS IN VAULT SHALL BE COATED IN ACCORDANCE WITH APPLICABLE MATERIALS SECTION AND 09 90 00 .
4. PROVIDE RESTRAINED PIPE AND FITTINGS IN VAULT.
5. PROVIDE ALTERNATIVE VENT PIPE LOCATION AS NECESSARY FOR VAULTS LOCATED WITHIN ROAD.
6. CONTRACTOR SHALL VERIFY DIMENSIONS WITH MANUFACTURERS AND PROVIDE VAULT WITH PROPERLY ALIGNED PENETRATIONS.
7. DIMENSIONS SHOWN ARE APPROXIMATE. CONTRACTOR TO FIELD VERIFY.
8. FURNISH EACH GATE VALVE WITH A 2" OPERATING NUT STEM EXTENSION CONSTRUCTED OF 1" SQUARE BAR STOCK WITH CENTERING DISK LOCATED WITHIN THE VALVE BOX.

AECOM

Thornton WATER PROJECT

TWP SEG A, PHASE 1
PROJECT No. 12-777H5

CLIENT

CITY OF THORNTON
12450 WASHINGTON ST,
THORNTON, CO 80241
720.977.6700 tel 000.000.0000 fax
www.thorntonwaterproject.com

CONSULTANT

AECOM
7595 TECHNOLOGY WAY, STE 200
DENVER, CO 80237
T 303.694.2770 F 303.694.3946
www.aecom.com

ISSUE/REVISION

I/R	DATE	DESCRIPTION
E	10/15/2021	PRE-FINAL SUBMITTAL
C	04/27/2021	75% SUBMITTAL
B	09/25/2020	35% FINAL SUBMITTAL
A	04/21/2020	35% SUBMITTAL

VERIFIED SCALES

BAR IS ONE INCH ON ORIGINAL DRAWING
0 1"
IF NOT ONE INCH ON THIS SHEET, ADJUST SCALES ACCORDINGLY

DRAWN BY:	SEM/JEC
CHKD BY:	MG
CHKD BY:	CAT
APPD BY:	WEW

PROJECT NUMBER

60619101

SHEET TITLE

COMBINED ACCESS MANWAY, CAV AND BLOWOFF ASSEMBLY

SHEET NUMBER

DT09

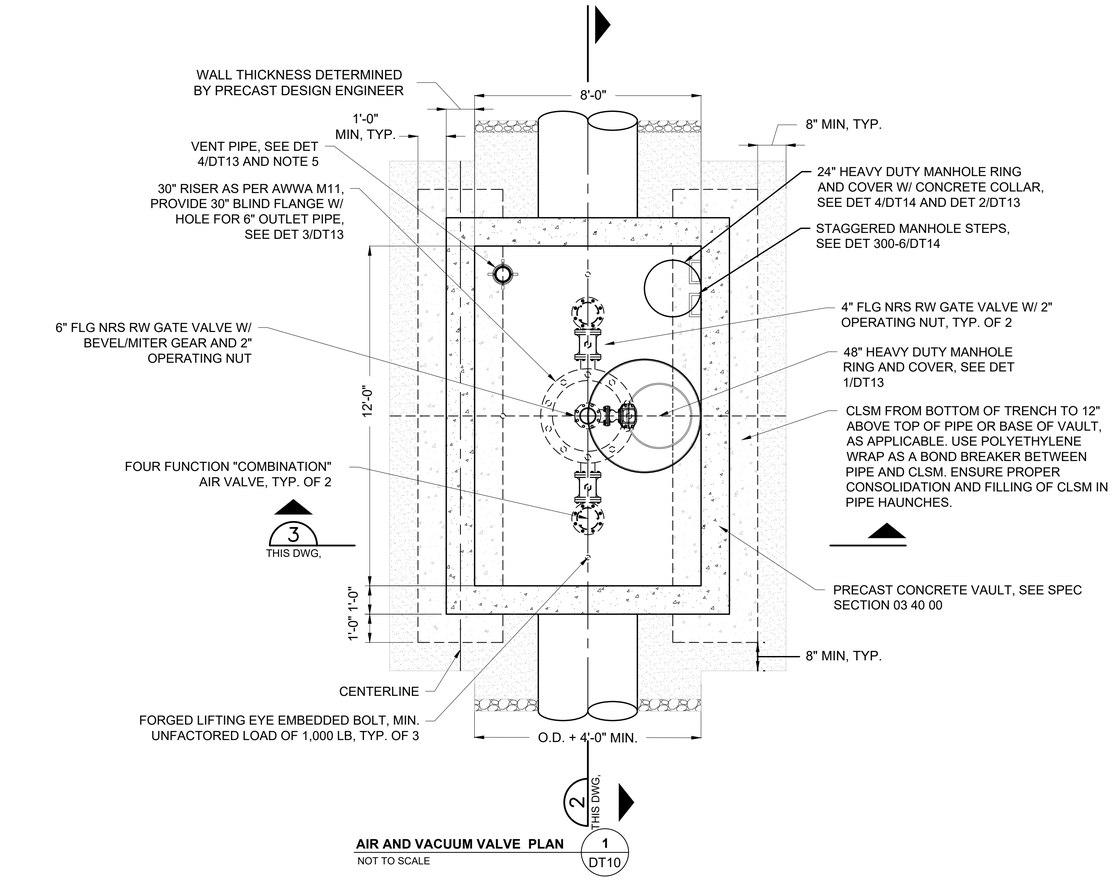

AIR AND VACUUM VALVE PLAN 1 DT10
NOT TO SCALE

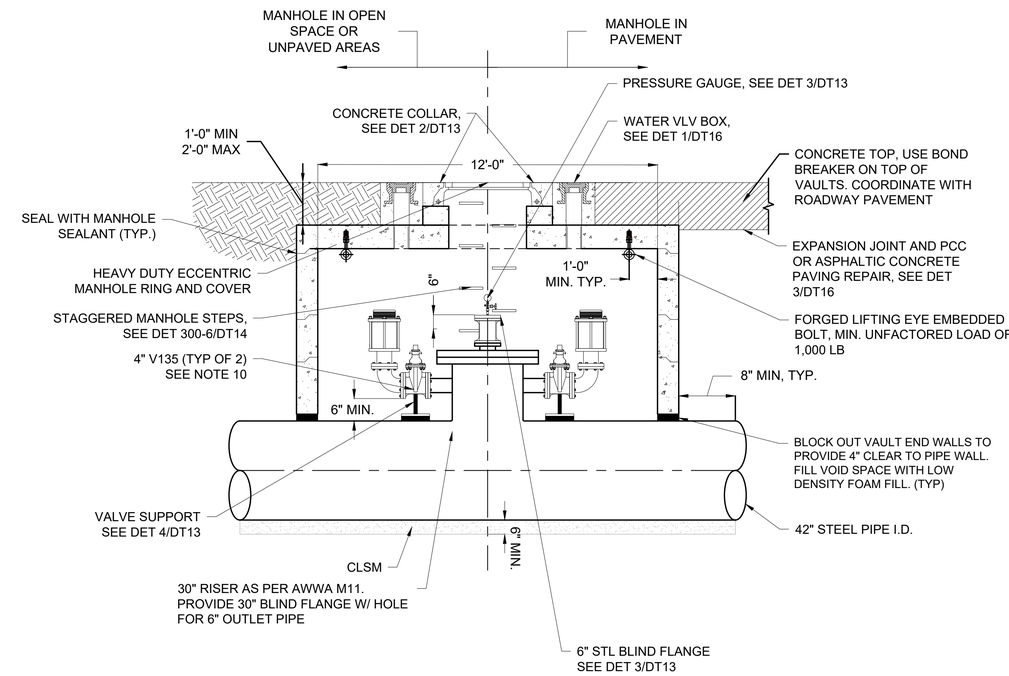

AIR AND VACUUM VALVE WITH FLAT TOP - SECTION 2 DT10
NOT TO SCALE

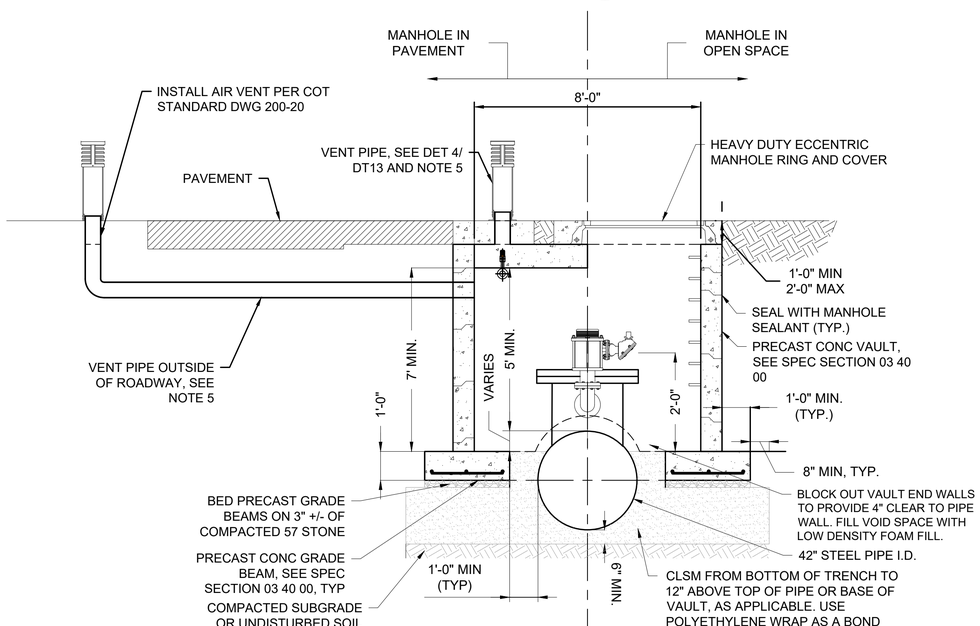

AIR AND VACCUM VALVE WITH FLAT TOP - SECTION 3 DT10
NOT TO SCALE

NOTES:

1. PROVIDE PREFORMED FLEXIBLE BUTYL JOINT SEALANT OR APPROVED EQUAL BETWEEN PRECAST SEGMENTS OF THE MANHOLE.
2. FIELD COAT ALL BOLTS IN ACCESS MANWAY WITH DENSO TAPE OR ACCEPTED PETROLATUM BASED TAPE.
3. DIRECT BURY AND EXPOSED DUCTILE IRON AND STEEL PIPE AND FITTINGS IN VAULT SHALL BE COATED IN ACCORDANCE WITH SECTION AND 09 90 00 .
4. PROVIDE RESTRAINED PIPE AND FITTINGS IN VAULT.
5. PROVIDE ALTERNATIVE VENT PIPE LOCATION AS NECESSARY FOR VAULTS LOCATED WITHIN ROADWAY.
6. CONTRACTOR SHALL VERIFY DIMENSIONS WITH MANUFACTURERS AND PROVIDE VAULT WITH PROPERLY ALIGNED PENETRATIONS.
7. DETAIL IS SUBJECT TO CHANGE PENDING DISCUSSION WITH PROJECT CONSULTANTS.
8. DIMENSIONS SHOWN ARE APPROXIMATE. CONTRACTOR TO FIELD VERIFY.
9. FURNISH EACH GATE VALVE WITH A 2" OPERATING NUT STEM EXTENSION CONSTRUCTED OF 1" SQUARE BAR STOCK WITH CENTERING DISK LOCATED WITHIN THE VALVE BOX.

COMBINATION AIR AND VACUUM VALVE LOCATIONS

Number	Station	Flange Sch	Operating Pressure	AI/VR Orifice Size	AR Orifice Size*	LOCKING LID (SEE DET4/DT14)
1	199+81.97'	A	TO BE INCLUDED FOR FINAL SUBMITTAL	6"	3/32"	Y
2	226+00.00'	A		4"	3/32"	Y
3	331+33.00'	A		4"	3/32"	N
*MINIMUM ORIFICE SIZE REQUIRED						

AECOM

Thornton WATER PROJECT

TWP SEG A, PHASE 1
PROJECT No. 12-777H5

CLIENT

CITY OF THORNTON
12450 WASHINGTON ST,
THORNTON, CO 80241
720.977.6700 tel 000.000.0000 fax
www.thorntonwaterproject.com

CONSULTANT

AECOM
7595 TECHNOLOGY WAY, STE 200
DENVER, CO 80237
T 303.694.2770 F 303.694.3946
www.aecom.com

ISSUE/REVISION

I/R	DATE	DESCRIPTION
E	10/15/2021	PRE-FINAL SUBMITTAL
C	04/27/2021	75% SUBMITTAL
B	09/25/2020	35% FINAL SUBMITTAL
A	04/21/2020	35% SUBMITTAL

VERIFIED SCALES

BAR IS ONE INCH ON ORIGINAL DRAWING
0 1"
IF NOT ONE INCH ON THIS SHEET, ADJUST SCALES ACCORDINGLY

DRAWN BY: SEM/JEC
CHKD BY: MG
CHKD BY: CAT
APPD BY: WEW

PROJECT NUMBER

60619101

SHEET TITLE

COMBINATION AIR AND VACUUM VALVE DETAILS

SHEET NUMBER

DT10

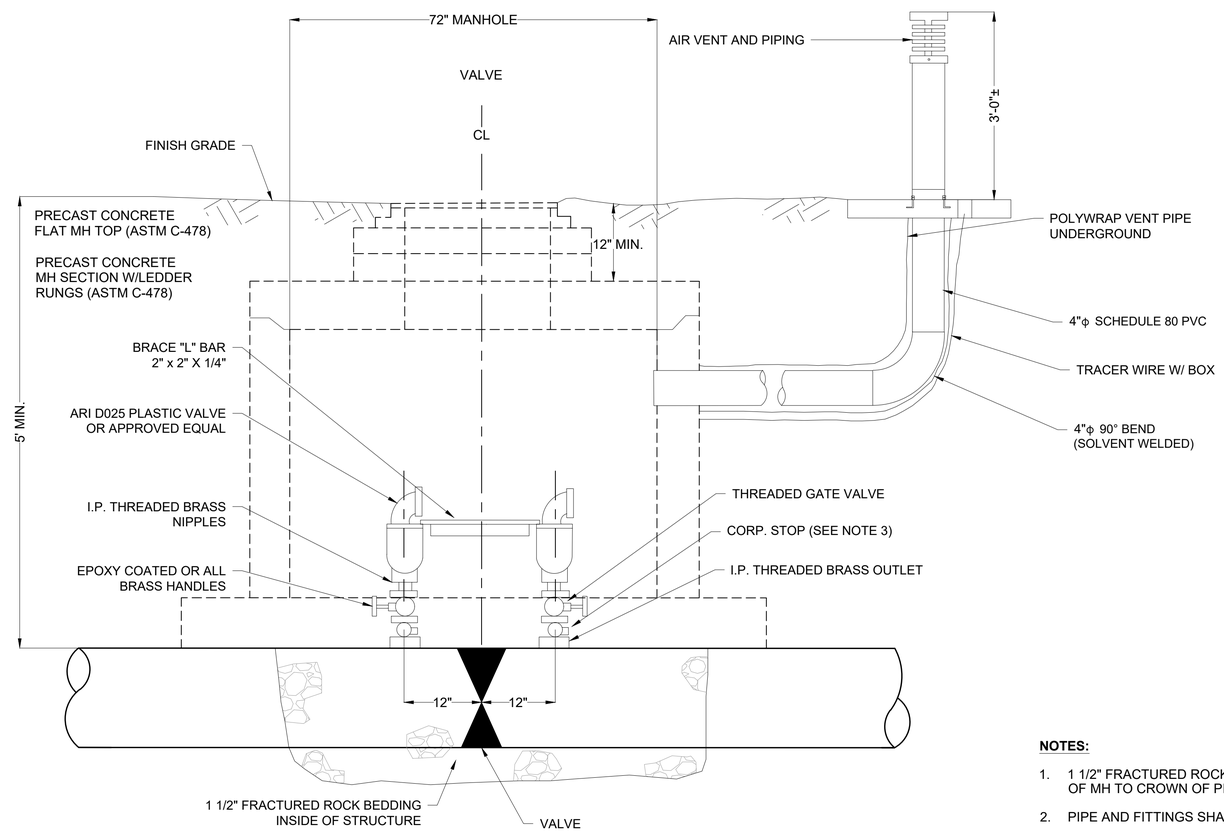

AIR AND VACCUM VALVE WITH FLAT TOP - SECTION
NOT TO SCALE

1
DT11

NOTES:

1. 1 1/2" FRACTURED ROCK SHALL BE PLACED IN BOTTOM OF MH TO CROWN OF PIPE ONLY.
2. PIPE AND FITTINGS SHALL BE BRASS.
3. WITH I.P. THREADED OUTLET, CORP. STOP SHALL BE I.P. THREADED BOTH ENDS (MUELLER H-10012 OR APPROVED EQUAL). FOR DIRECT TAP ON PIPE, CORP. STOP SHALL BE MUELLER (CC) THREADED ONE END, I.P. THREADED OTHER (H-10003 OR OTHER APPROVED BY THE DEVELOPMENT ENGINEERING MANAGER).

COMBINATION AIR AND VACUUM VALVE IN MANHOLE LOCATIONS

C.A.V. Number	Station	Flange Sch	Operating pressure	AI/VR Orifice Size	AR Orifice Size*	LOCKING LID (SEE DET4/DT14)
1	55+00.00'	A	TO BE INCLUDED FOR FINAL SUBMITTAL	6"	3/32"	Y
2	107+30.00'	A		4"	3/32"	Y
3	162+25.00'	A		4"	3/32"	Y
2	255+50.00'	A		4"	3/32"	N
3	262+54.72'	A		4"	3/32"	Y
4	273+68.84'	A		4"	3/32"	N
*MINIMUM ORIFICE SIZE REQUIRED						

AECOM

Thornton WATER PROJECT

TWP SEG A, PHASE 1
PROJECT No. 12-777H5

CLIENT

CITY OF THORNTON
12450 WASHINGTON ST,
THORNTON, CO 80241
720.977.6700 tel 000.000.0000 fax
www.thorntonwaterproject.com

CONSULTANT

AECOM
7595 TECHNOLOGY WAY, STE 200
DENVER, CO 80237
T 303.694.2770 F 303.694.3946
www.aecom.com

ISSUE/REVISION

I/R	DATE	DESCRIPTION
E	10/15/2021	PRE-FINAL SUBMITTAL
C	04/27/2021	75% SUBMITTAL
B	09/25/2020	35% FINAL SUBMITTAL
A	04/21/2020	35% SUBMITTAL

VERIFIED SCALES

BAR IS ONE INCH ON ORIGINAL DRAWING
0 1"
IF NOT ONE INCH ON THIS SHEET, ADJUST SCALES ACCORDINGLY

DRAWN BY:	SEM/JEC
CHKD BY:	MG
CHKD BY:	CAT
APPD BY:	WEW

PROJECT NUMBER

60619101

SHEET TITLE

STANDARD THORNTON AIR VAC ASSEMBLY

SHEET NUMBER

DT11

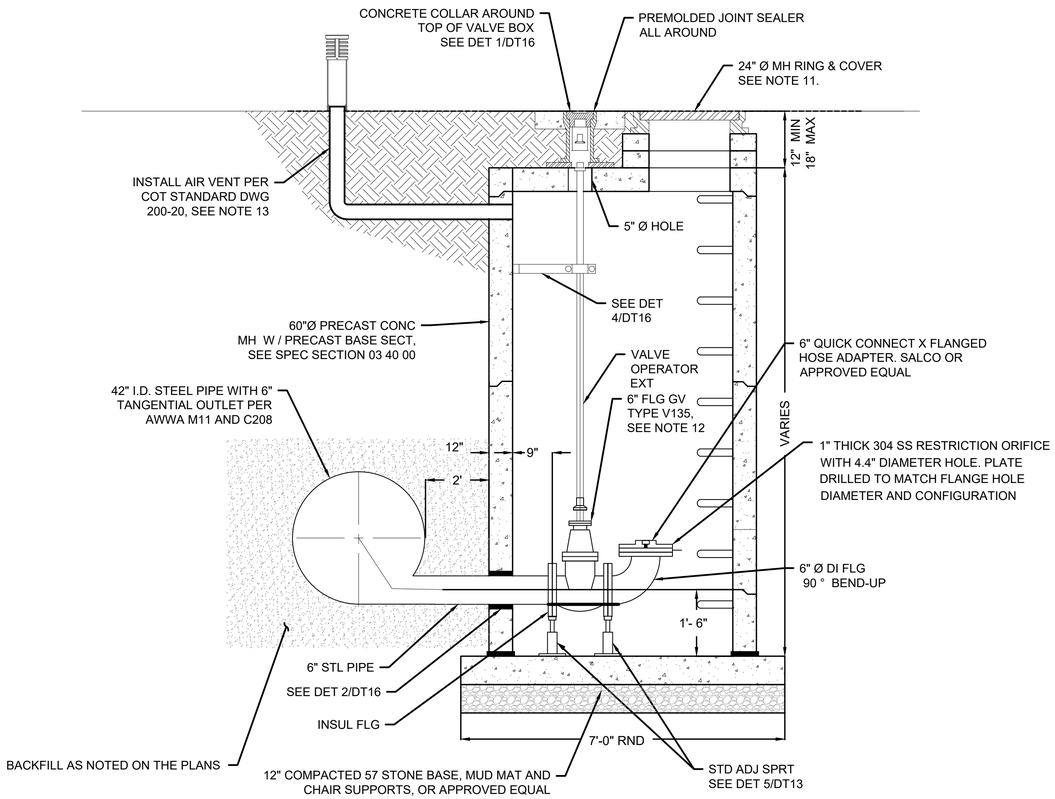

6" BLOWOFF ASSEMBLY (1 / DT12)

NOT TO SCALE

NOTES:

1. PROVIDE PREFORMED FLEXIBLE BUTYL JOINT SEALANT OR APPROVED EQUAL BETWEEN PRECAST SEGMENTS OF THE VAULT AND MANHOLE SEGMENTS.
2. FIELD COAT ALL BOLTS IN VAULT WITH DENSO TAPE OR ACCEPTED PETROLATUM BASED TAPE.
3. EXPOSED DUCTILE IRON AND STEEL PIPE AND FITTINGS IN VAULT SHALL BE COATED IN ACCORDANCE WITH SECTION 09 90 00.
4. PROVIDE FULLY RESTRAINED DIP AND FITTINGS IN VAULT.
5. FOR MANHOLES DEEPER THAN 20 FEET, A SAFETY CLIMBING RAIL MUST BE PROVIDED.
6. VALVE OPERATOR NUT EXTENSION SHALL BE TERMINATED NO DEEPER THAN 4 FEET FROM THE FINISHED GRADE.
7. FOR CLSM BACKFILL, ENSURE PROPER CONSOLIDATION AND FILLING OF CLSM IN PIPE HAUNCHES. PLACE IN LIFTS AND ENSURE ADEQUATE BOUYANCY CONTROL MEASURES ARE IN PLACE.
8. DISTURBED EARTH UNDER PIPE ZONE SHALL BE STRUCTURALLY BACKFILLED WITH BEDDING MATERIAL OR CLSM.
9. CONTRACTOR SHALL VERIFY DIMENSIONS WITH MANUFACTURERS AND PROVIDE VAULT WITH PROPERLY ALIGNED PENETRATIONS.
10. ADJUSTABLE SIDE OF BFV SEATS IN VAULT SHALL BE POSITIONED TOWARDS THE DOWNSTREAM SIDE.
11. ALL MANHOLE LIDS IN UNPAVED OR OPEN SPACE AREAS SHALL BE SECURED LIDS WITH MCGUARD INTIMIDATOR SECURED BOLTS.
12. FURNISH EACH GATE VALVE WITH A 2" OPERATING NUT STEM EXTENSION PER CITY OF THORNTON STANDARDS WITH CENTERING DISK LOCATED WITHIN THE VALVE BOX.
13. PROVIDE ALTERNATIVE VENT PIPE LOCATION AS NECESSARY FOR VAULTS LOCATED WITHIN ROADWAY.

BLOWOFF ASSEMBLY LOCATIONS

Number	Station	Nominal Size	Flange Sch	LOCKING LID (SEE DET4/DT14)
1	170+00.00'	6"	AWWA CLASS E/ASME B16.1 CL 250/ASME B16.5 CL 300	Y
2	175+69.69'	6"	AWWA CLASS E/ASME B16.1 CL 250/ASME B16.5 CL 300	Y
3	223+46.67'	6"	AWWA CLASS E/ASME B16.1 CL 250/ASME B16.5 CL 300	Y
4	338+04.06'	6"	AWWA CLASS E/ASME B16.1 CL 250/ASME B16.5 CL 300	Y

C:\pwworking\aecom_ds20_na_2019\jenna.crouch@aecom.com\d0105067\DT11.dwg

AECOM

Thornton WATER PROJECT

TWP SEG A, PHASE 1
PROJECT No. 12-777H5

CLIENT

CITY OF THORNTON
12450 WASHINGTON ST,
THORNTON, CO 80241
720.977.6700 tel 000.000.0000 fax
www.thorntonwaterproject.com

CONSULTANT

AECOM
7595 TECHNOLOGY WAY, STE 200
DENVER, CO 80237
T 303.694.2770 F 303.694.3946
www.aecom.com

ISSUE/REVISION

I/R	DATE	DESCRIPTION
E	10/15/2021	PRE-FINAL SUBMITTAL
C	04/27/2021	75% SUBMITTAL
B	09/25/2020	35% FINAL SUBMITTAL
A	04/21/2020	35% SUBMITTAL

VERIFIED SCALES

BAR IS ONE INCH ON ORIGINAL DRAWING
0 1"
IF NOT ONE INCH ON THIS SHEET, ADJUST SCALES ACCORDINGLY

DRAWN BY:	SEM/JEC
CHKD BY:	MG
CHKD BY:	CAT
APPD BY:	WEW

PROJECT NUMBER

60619101

SHEET TITLE

BLOWOFF ASSEMBLY DETAILS

SHEET NUMBER

DT12

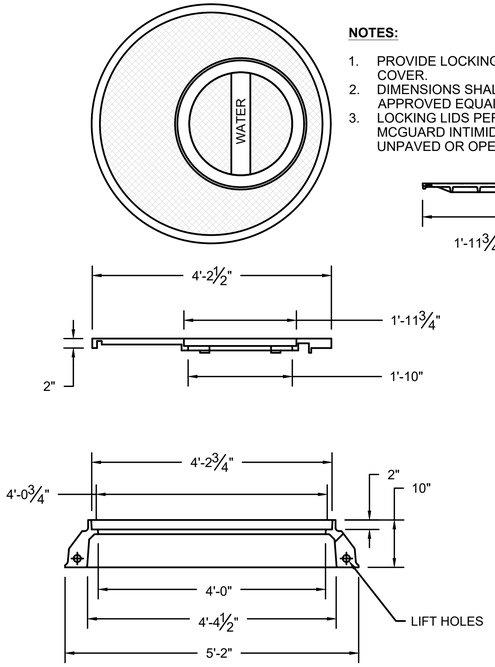

NOTES:

1. PROVIDE LOCKING TYPE RING AND COVER.
2. DIMENSIONS SHALL BE AS SHOWN OR APPROVED EQUAL.
3. LOCKING LIDS PER COT STANDARD MCGUARD INTIMIDATOR FOR USE IN UNPAVED OR OPEN SPACE AREAS.

HEAVY DUTY MANHOLE RING AND COVER (1 / DT13)
NOT TO SCALE

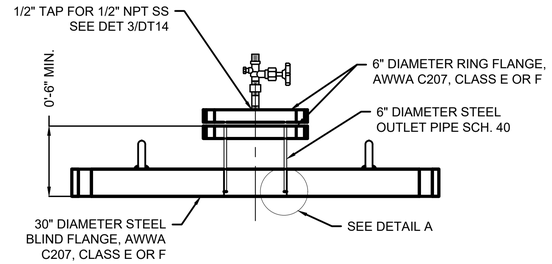

30" ACCESS RISER BLIND FLANGE 6" OUTLET

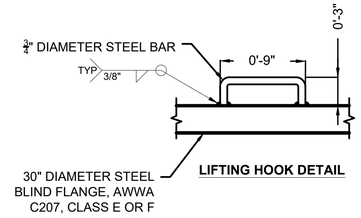

LIFTING HOOK DETAIL

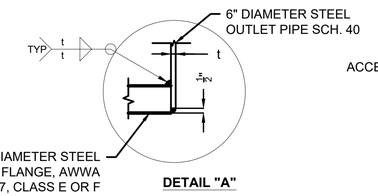

DETAIL "A"

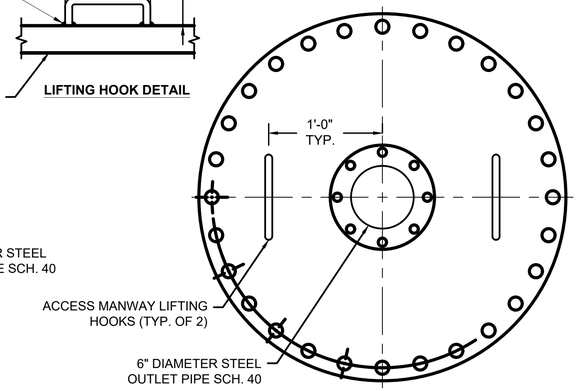

30" ACCESS RISER LIFTING HOOK DETAIL

FLANGE SCH.	DESCRIPTION
A	AWWA CLASS E/ ASME B16.1 CL 125/ ASME B16.5 CL 150 (<24")
B	AWWA CLASS F/ ASME B16.1 CL 250/ ASME B16.5 CL 300

NOTES:

1. SEE AWWA C207 FOR METHOD OF RING FLANGE ATTACHMENT.
2. SEE RING FLANGE CLASS SCHEDULE ON SPECIFIC ACCESS RISER DETAIL.
3. FIELD COAT ALL BOLTS IN ACCESS MANWAY WITH DENSO TAPE OR ACCEPTED PETROLATUM BASED TAPE.
4. EXPOSED DUCTILE IRON AND STEEL PIPE AND FITTINGS IN ACCESS MANWAY SHALL BE COATED IN ACCORDANCE WITH SECTION 09 90 00.

BLIND FLANGE DETAILS FOR ACCESS PORTS/MANWAYS (3 / DT13)
NOT TO SCALE

NOTES:

1. ADJUST MANHOLE RIM AND PLACE CONCRETE COLLAR AFTER STREET PAVEMENT REPAIR HAS BEEN PERFORMED.

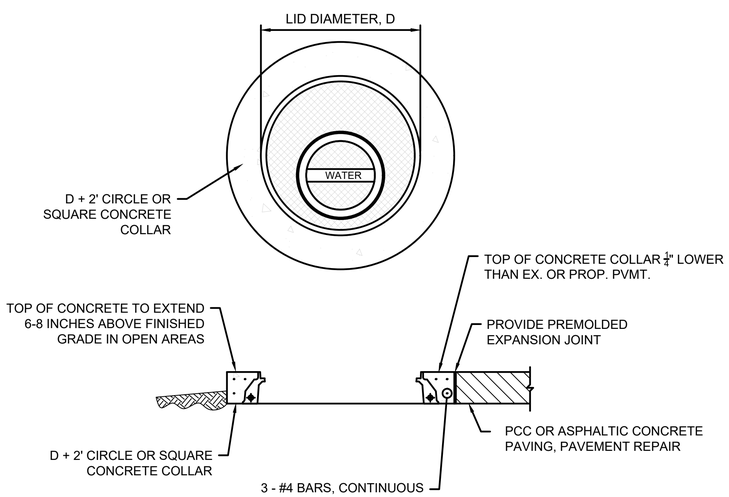

MANHOLE CONCRETE COLLAR DETAIL (2 / DT13)
NOT TO SCALE

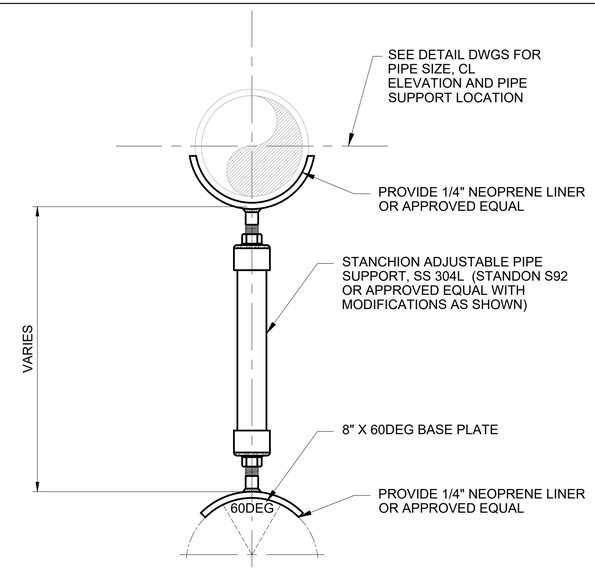

ADJUSTABLE PIPE AND VALVE SUPPORT DETAIL OVER 42" PIPE (4 / DT13)
NOT TO SCALE

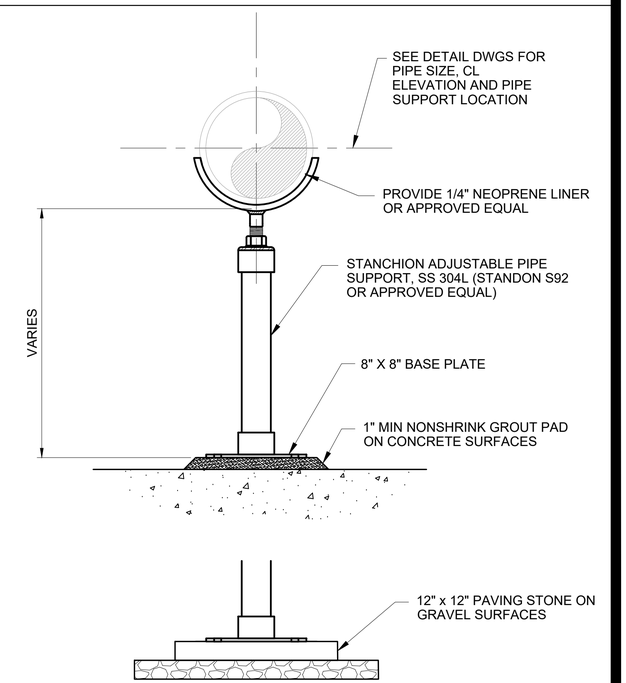

ADJUSTABLE PIPE AND VALVE SUPPORT DETAIL (5 / DT13)
NOT TO SCALE

AECOM

Thornton WATER PROJECT

TWP SEG A, PHASE 1
PROJECT No. 12-777H5

CLIENT

CITY OF THORNTON
12450 WASHINGTON ST,
THORNTON, CO 80241
720.977.6700 tel 000.000.0000 fax
www.thorntonwaterproject.com

CONSULTANT

AECOM
7595 TECHNOLOGY WAY, STE 200
DENVER, CO 80237
T 303.694.2770 F 303.694.3946
www.aecom.com

ISSUE/REVISION

I/R	DATE	DESCRIPTION
E	10/15/2021	PRE-FINAL SUBMITTAL
C	04/27/2021	75% SUBMITTAL
B	09/25/2020	35% FINAL SUBMITTAL
A	04/21/2020	35% SUBMITTAL

VERIFIED SCALES

BAR IS ONE INCH ON ORIGINAL DRAWING
0 1"
IF NOT ONE INCH ON THIS SHEET, ADJUST SCALES ACCORDINGLY

DRAWN BY:	SEM/JEC
CHKD BY:	MG
CHKD BY:	CAT
APPD BY:	WEW

PROJECT NUMBER
60619101

SHEET TITLE
MISCELLANEOUS DETAILS

SHEET NUMBER
DT13

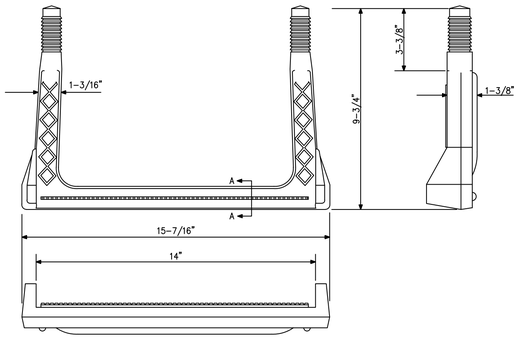

COPOLYMER POLYPROPYLENE PLASTIC

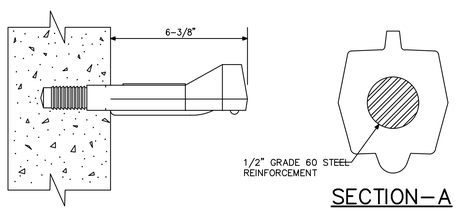

SECTION–A

N.T.S.

CITY OF THORNTON, COLORADO
STANDARDS & SPECIFICATIONS

PLASTIC MANHOLE STEP

ISSUED: April 1992
REVISED:
DRAWING NO. 300–6

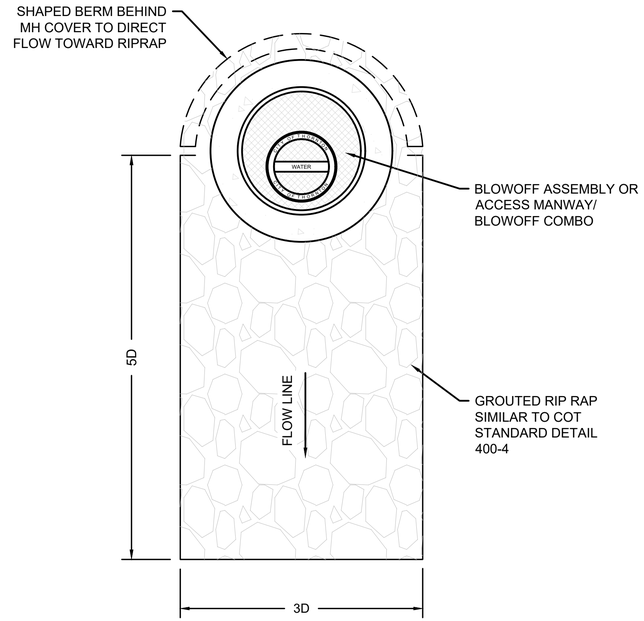

BLOWOFF ASSEMBLY DRAIN TYPICAL DETAIL (2 / DT14)
NOT TO SCALE

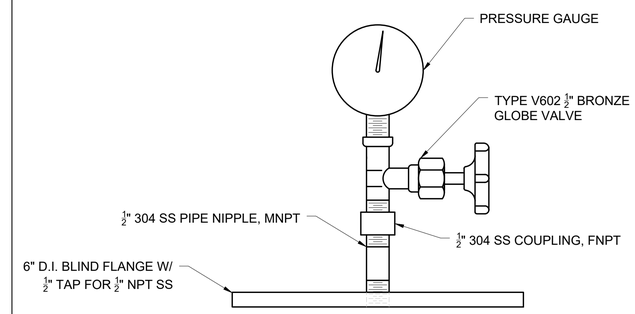

PRESSURE GAUGE (3 / DT14)
NOT TO SCALE

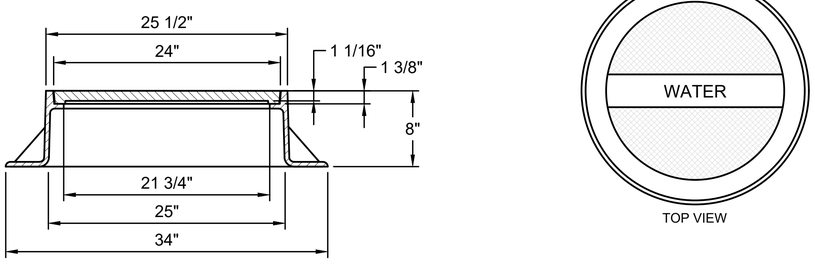

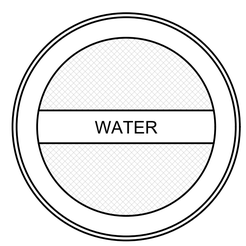

TOP VIEW

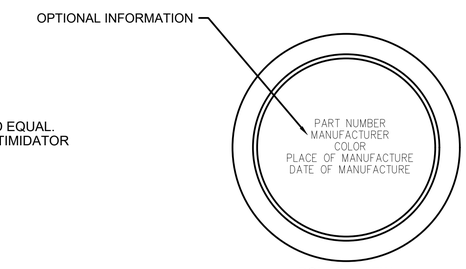

BOTTOM VIEW

NOTES:

1. PROVIDE LOCKING TYPE RING AND COVER.
2. DIMENSIONS SHALL BE AS SHOWN OR APPROVED EQUAL.
3. LOCKING LIDS PER COT STANDARD MCGUARD INTIMIDATOR FOR USE IN UNPAVED OR OPEN SPACE AREAS.

24" HEAVY DUTY MANHOLE RING AND COVER (4 / DT14)
NOT TO SCALE

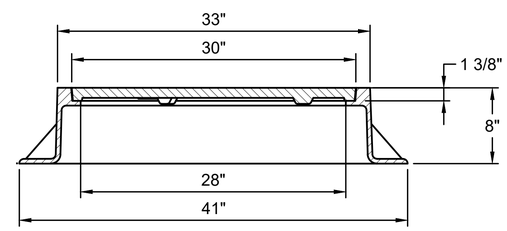

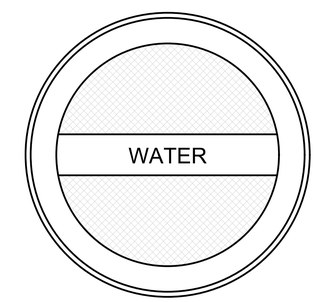

TOP VIEW

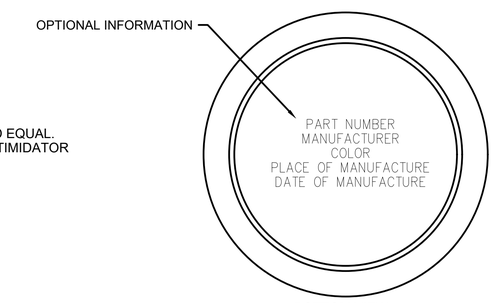

BOTTOM VIEW

NOTES:

1. PROVIDE LOCKING TYPE RING AND COVER.
2. DIMENSIONS SHALL BE AS SHOWN OR APPROVED EQUAL.
3. LOCKING LIDS PER COT STANDARD MCGUARD INTIMIDATOR FOR USE IN UNPAVED OR OPEN SPACE AREAS.

30" HEAVY DUTY MANHOLE RING AND COVER (5 / DT14)
NOT TO SCALE

AECOM

Thornton WATER PROJECT

TWP SEG A, PHASE 1
PROJECT No. 12-777H5

CLIENT

CITY OF THORNTON
12450 WASHINGTON ST,
THORNTON, CO 80241
720.977.6700 tel 000.000.0000 fax
www.thorntonwaterproject.com

CONSULTANT

AECOM
7595 TECHNOLOGY WAY, STE 200
DENVER, CO 80237
T 303.694.2770 F 303.694.3946
www.aecom.com

ISSUE/REVISION

I/R	DATE	DESCRIPTION
E	10/15/2021	PRE-FINAL SUBMITTAL
C	04/27/2021	75% SUBMITTAL
B	09/25/2020	35% FINAL SUBMITTAL
A	04/21/2020	35% SUBMITTAL

VERIFIED SCALES

BAR IS ONE INCH ON ORIGINAL DRAWING
0 1"
IF NOT ONE INCH ON THIS SHEET, ADJUST SCALES ACCORDINGLY

DRAWN BY:	SEM/JEC
CHKD BY:	MG
CHKD BY:	CAT
APPD BY:	WEW

PROJECT NUMBER
60619101

SHEET TITLE
MISCELLANEOUS DETAILS

SHEET NUMBER
DT14

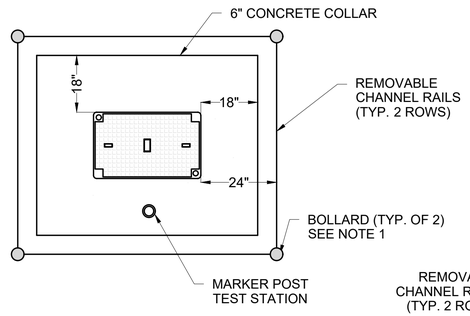

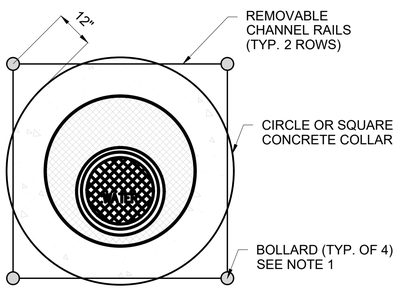

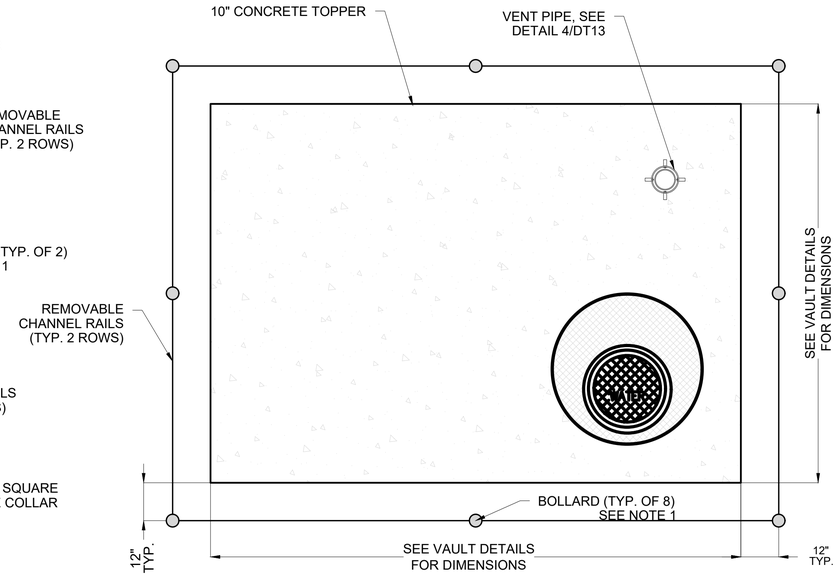

TYPICAL APPURTENANCE - BOLLARD PLAN (1 / DT15)

NOT TO SCALE

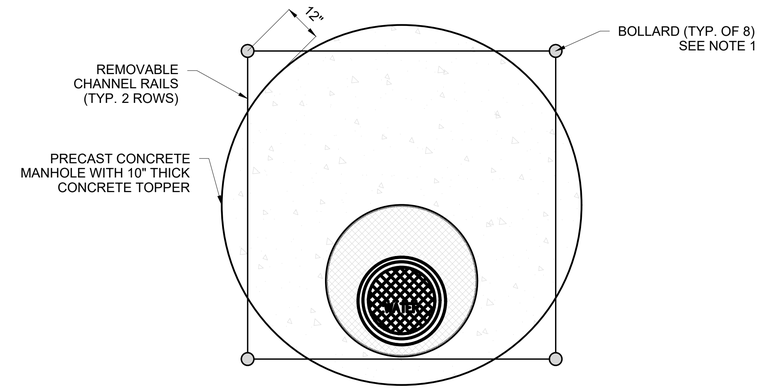

NOTES:

1. TYPE II BOLLARD SHALL BE USED IN OPEN FIELDS THAT ARE FARMED, OTHERWISE TYPE I MAY BE USED. FOR STRUCTURES PLACED IN ROADWAYS, BOLLARDS ARE NOT REQUIRED.
2. VAULT CONCRETE COLLARS OR FLAT TOPS SHALL BE PROTECTED WITH BOLLARDS PLACED EQUIDISTANT FROM ONE ANOTHER AT A DISTANCE OF 12" MIN. FROM OUTSIDE EDGE OF VAULT LID. CONTRACTOR MAY PROPOSE FOR ACCEPTANCE AN ALTERNATIVE BOLLARD CONFIGURATION WHERE MULTIPLE APPURTENANCES ARE GROUPED TOGETHER OR WHERE DEPTH OF VAULT TOP PRECLUDES PLACEMENT AS SHOWN.

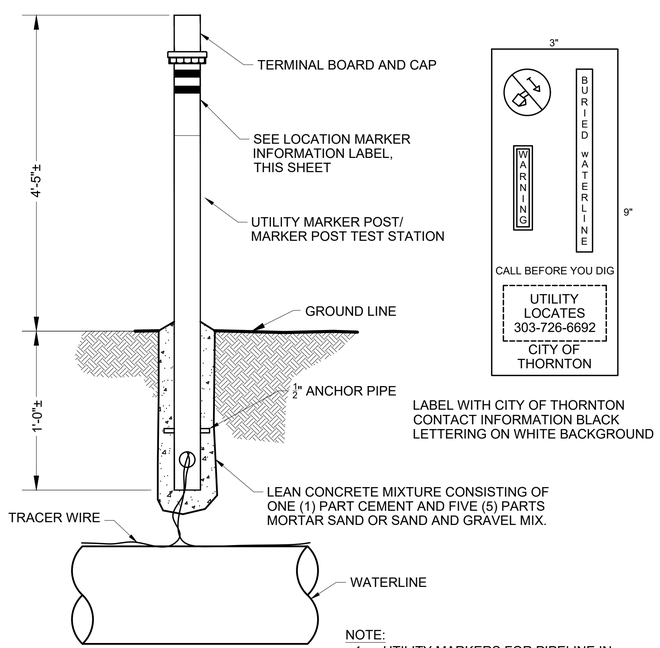

NOTE:

1. UTILITY MARKERS FOR PIPELINE IN ROADWAY TO BE OFFSET OUT OF ROADWAY WITH DISTANCE TO PIPE LISTED ON THE INFORMATION MARKER.

UTILITY MARKER / MARKER POST DETAIL (2 / DT15)

NOT TO SCALE

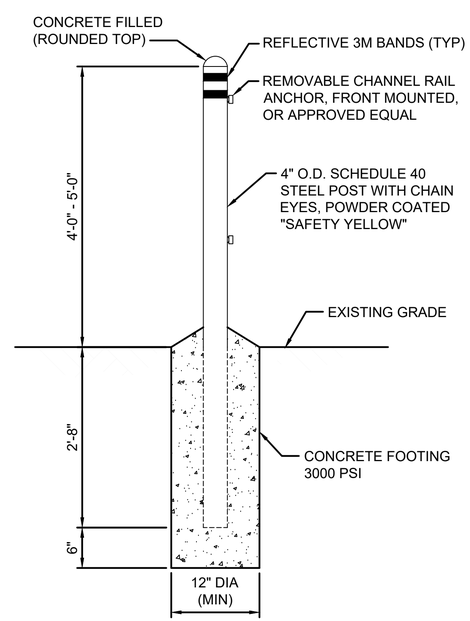

NOTES:

1. LOCATE ALL UNDERGROUND UTILITIES PRIOR TO EXCAVATING POST FOOTING.
2. BOLLARDS SHALL BE POWDER-COATED "SAFETY YELLOW".

TYPE I BOLLARD (TYPICAL) (3 / DT15)

NOT TO SCALE

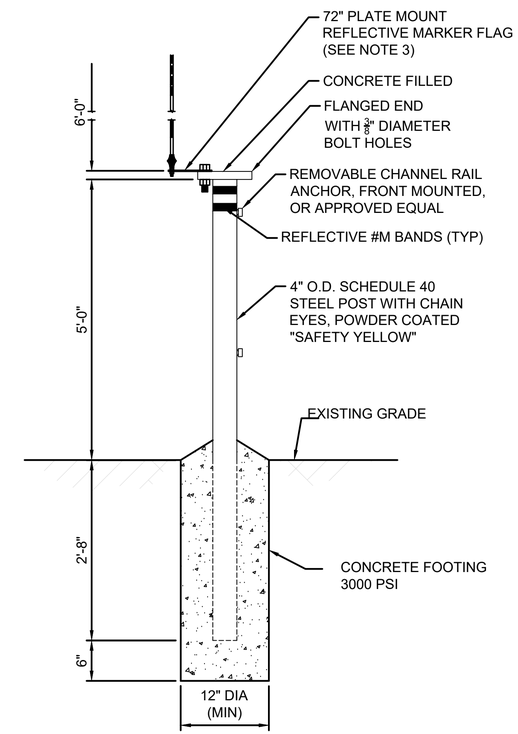

NOTES:

1. LOCATE ALL UNDERGROUND UTILITIES PRIOR TO EXCAVATING POST FOOTING.
2. BOLLARDS SHALL BE POWDER-COATED "SAFETY YELLOW". HOT DIP GALVANIZED NUTS AND BOLTS.
3. TO BE RESILIENT 0.375" DIAMETER WHITE FIBER FIBERGLASS FLAG SHAFT ATTACHED TO HEAVY DUTY GALVANIZED HARD DRAWN STEEL AND PLATED FOR RUST PROTECTION. SHALL BE CORROSION-FREE AND UV RESISTANT, SPRING MOUNTED FIBERGLASS SHAFT.

TYPE II BOLLARD W/ REFLECTIVE FLAG (TYPICAL) (4 / DT15)

NOT TO SCALE

AECOM

Thornton WATER PROJECT

TWP SEG A, PHASE 1
PROJECT No. 12-777H5

CLIENT

CITY OF THORNTON
12450 WASHINGTON ST,
THORNTON, CO 80241
720.977.6700 tel 000.000.0000 fax
www.thorntonwaterproject.com

CONSULTANT

AECOM
7595 TECHNOLOGY WAY, STE 200
DENVER, CO 80237
T 303.694.2770 F 303.694.3946
www.aecom.com

ISSUE/REVISION

I/R	DATE	DESCRIPTION
E	10/15/2021	PRE-FINAL SUBMITTAL
C	04/27/2021	75% SUBMITTAL
B	09/25/2020	35% FINAL SUBMITTAL
A	04/21/2020	35% SUBMITTAL

VERIFIED SCALES

BAR IS ONE INCH ON ORIGINAL DRAWING
0 1"
IF NOT ONE INCH ON THIS SHEET, ADJUST SCALES ACCORDINGLY

DRAWN BY:	SEM/JEC
CHKD BY:	MG
CHKD BY:	CAT
APPD BY:	WEW

PROJECT NUMBER

60619101

SHEET TITLE

MARKER POST AND BOLLARD DETAILS

SHEET NUMBER

DT15

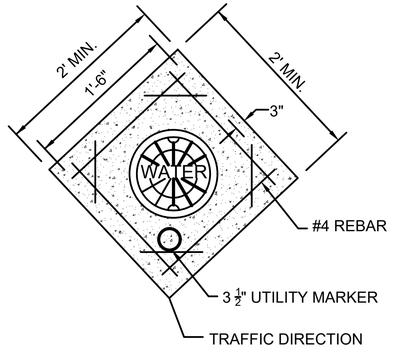

CONCRETE VALVE BOX COLLAR

PROVIDE CONCRETE UTILITY MARKER IN ACCORDANCE WITH USACE TYPE C MONUMENT DISC SPECIFICATION AND WITH A 3-INCH LONG SPLIT STYLE TAPERED STEM. THE MARKER SHALL BE ORBITAL-FORMED FROM SOLID, UNLEADED SILICON-BRONZE BAR WITH INFORMATION SHOWN, OR APPROVED EQUAL

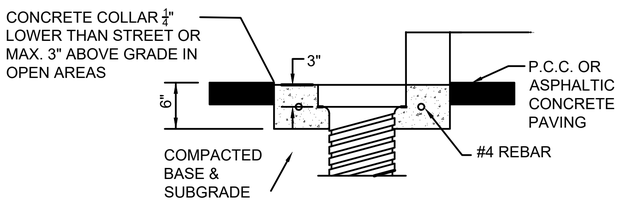

WATER VALVE BOX COLLAR AND ADJUSTMENT DETAIL
(PER COT STANDARDS)
1 / DT16

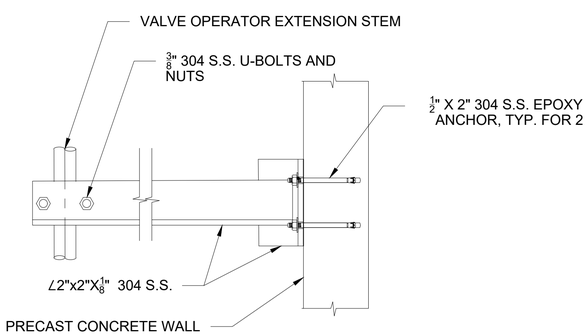

VALVE STEM EXTENSION OPERATOR SUPPORT
NOT TO SCALE
4 / DT16

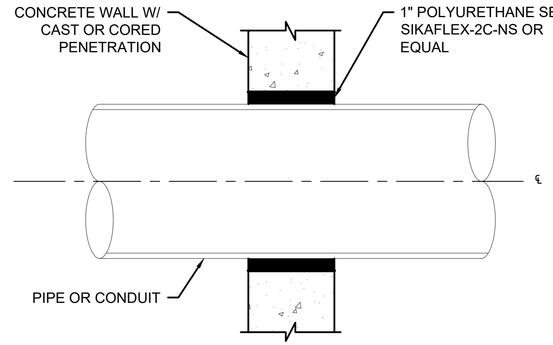

NOTES:
1. CAST PENETRATION W/ IN MANUFACTURER'S SPECIFIED TOLERANCES FOR THE PRODUCT. INSTALL CONNECTOR PER MANUFACTURERS RECOMMENDATIONS

TYPE A WALL PENETRATION
NOT TO SCALE
2 / DT16

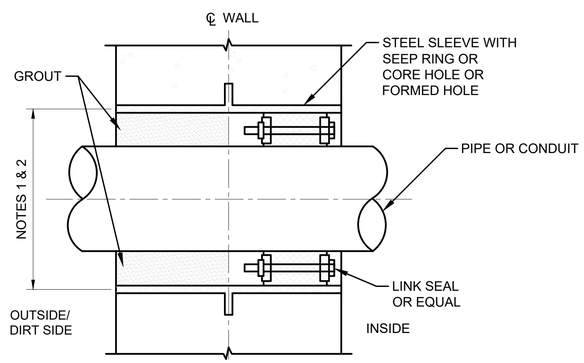

NOTES:

1. INSIDE DIAMETER OF PIPE SLEEVE AS REQUIRED BY THE MODULAR MECHANICAL SEAL ASSEMBLY MANUFACTURER, FOR THE PIPE OR CONDUIT SEAL.
2. FOR EXISTING WALL OMIT PIPE SLEEVE. CORE DRILL AS REQUIIRED FOR PIPE OR CONDUIT AND MECHANICAL SEAL ASSEMBLY.

TYPE B WALL PENETRATION
NOT TO SCALE
5 / DT16

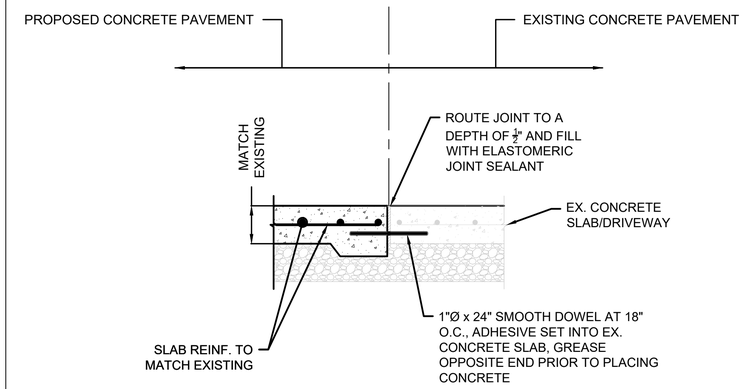

NOTES:

1. CONTRACTOR SHALL REPLACE EXISTING CONCRETE PAVEMENT THAT IS SAW CUT AND REMOVED IN KIND.
2. CONTRACTOR SHALL MOVE EVERY ATTEMPT TO SAW CUT PAVEMENT AT EXISTING CONTROI JOINTS, EXPANSION JOINTS, COLD JOINTS, ETC.

CONCRETE PAVEMENT/ DRIVEWAY REPAIR DETAIL
NOT TO SCALE
3 / DT16

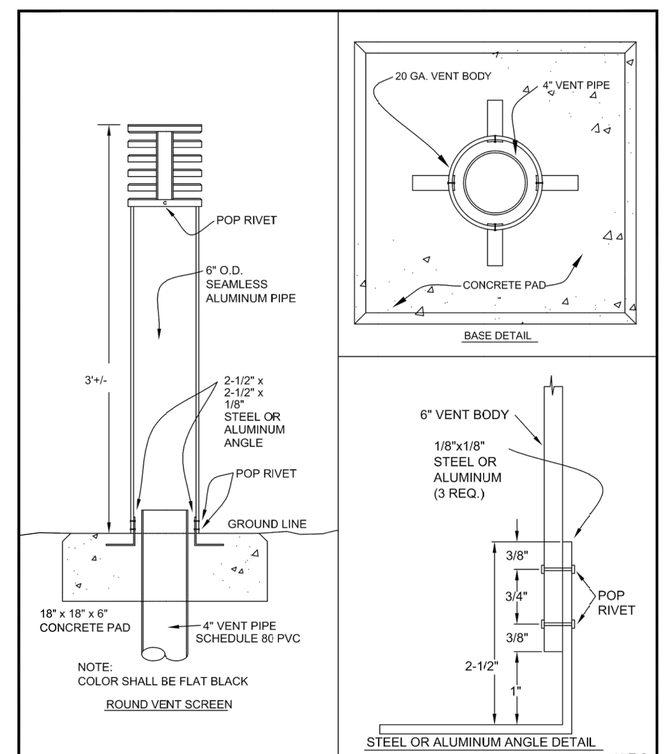

CITY OF THORNTON, COLORADO
STANDARDS & SPECIFICATIONS

TYPICAL AIR VENT DETAIL

ISSUED: JANUARY 2005
REVISED: APRIL 2010
DRAWING NO. 200-20

AECOM

Thornton WATER PROJECT

TWP SEG A, PHASE 1
PROJECT No. 12-777H5

CLIENT

CITY OF THORNTON
12450 WASHINGTON ST,
THORNTON, CO 80241
720.977.6700 tel 000.000.0000 fax
www.thorntonwaterproject.com

CONSULTANT

AECOM
7595 TECHNOLOGY WAY, STE 200
DENVER, CO 80237
T 303.694.2770 F 303.694.3946
www.aecom.com

ISSUE/REVISION

I/R	DATE	DESCRIPTION
E	10/15/2021	PRE-FINAL SUBMITTAL
C	04/27/2021	75% SUBMITTAL
B	09/25/2020	35% FINAL SUBMITTAL
A	04/21/2020	35% SUBMITTAL

VERIFIED SCALES

BAR IS ONE INCH ON ORIGINAL DRAWING
0 1"
IF NOT ONE INCH ON THIS SHEET, ADJUST SCALES ACCORDINGLY

DRAWN BY:	SEM/JEC
CHKD BY:	MG
CHKD BY:	CAT
APPD BY:	WEW

PROJECT NUMBER
60619101

SHEET TITLE
GENERAL DETAILS

SHEET NUMBER
DT16 80 OF 216

C:\pwworking\aecom_ds20_na_2019\jenna.crouch@aecom.com\d0105067\DT15.dwg

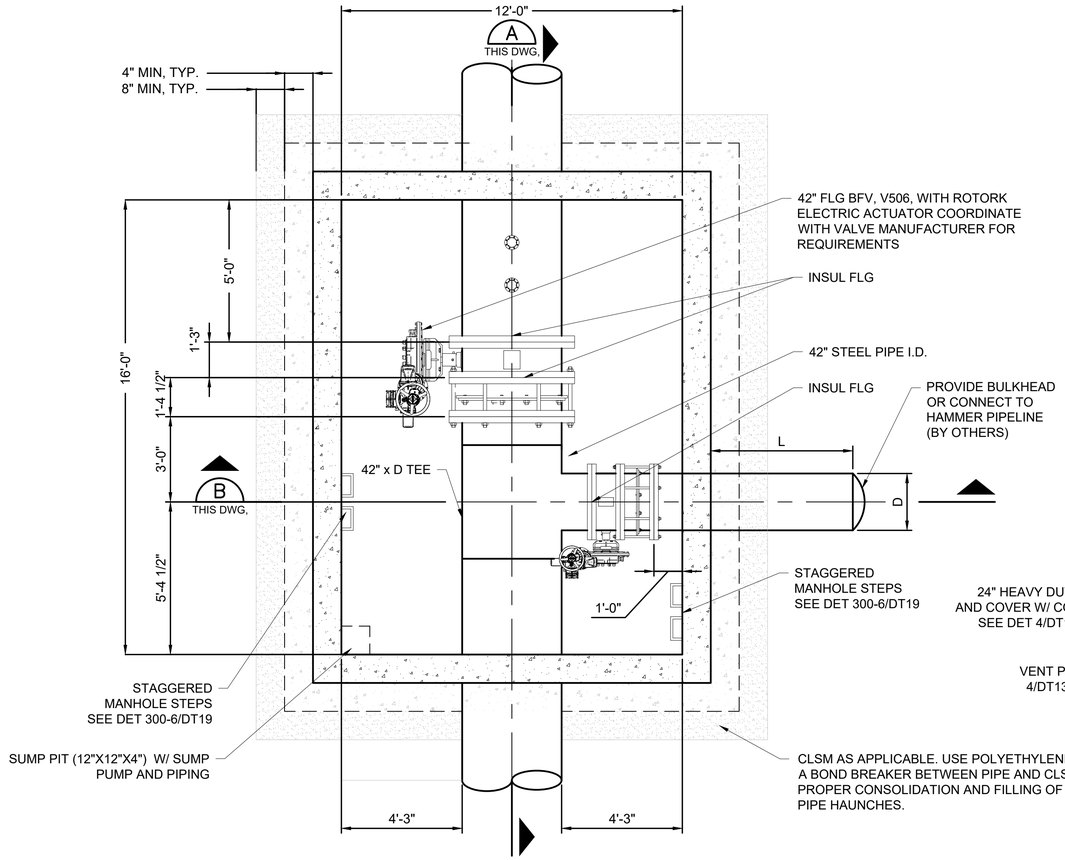

CONNECTION VAULT PLAN (1 / DT16)
NOT TO SCALE

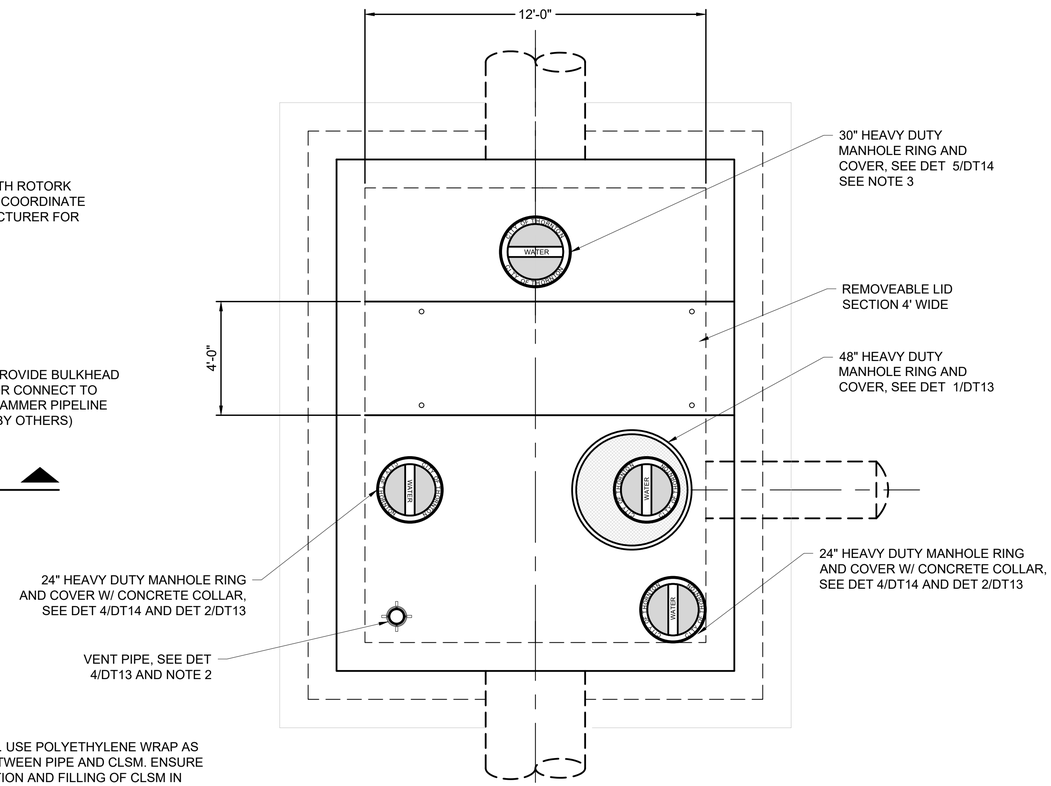

CONNECTION VAULT ROOF PLAN (2 / DT16)
NOT TO SCALE

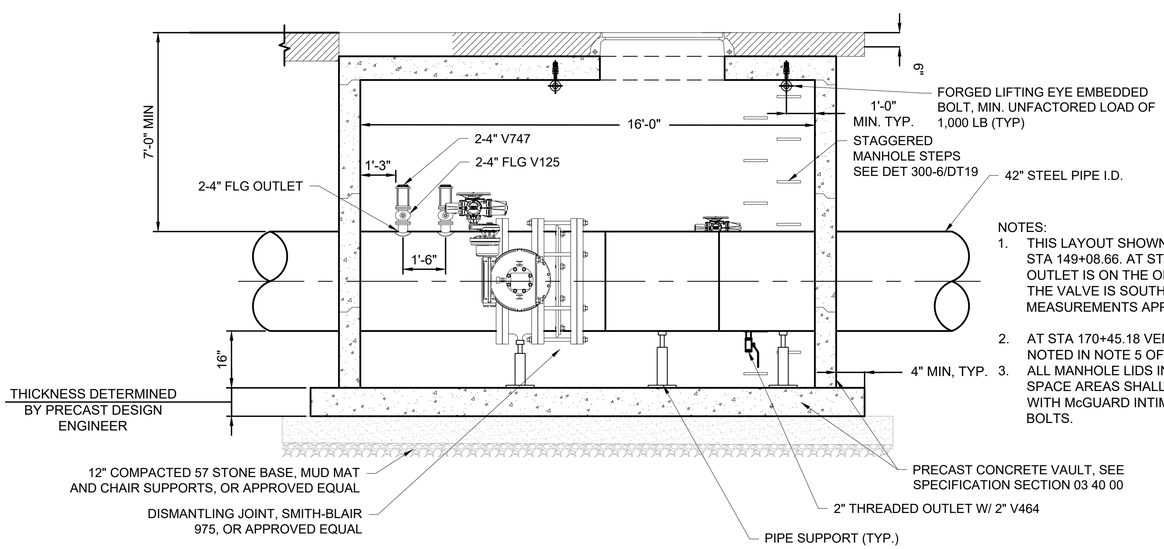

NOTES:
1. THIS LAYOUT SHOWN IS APPLICABLE TO STA 149+08.66. AT STA 170+45.18, THE OUTLET IS ON THE OPPOSITE SIDE AND THE VALVE IS SOUTH SIDE OF THE TEE. MEASUREMENTS APPLY TO BOTH VAULTS.
2. AT STA 170+45.18 VENT TO BE PLACED AS NOTED IN NOTE 5 OF DET B/DT09
3. ALL MANHOLE LIDS IN UNPAVED OR OPEN SPACE AREAS SHALL BE SECURED LIDS WITH McGUARD INTIMIDATOR SECURED BOLTS.

CONNECTION VAULT SECTION (A / DT16)
NOT TO SCALE

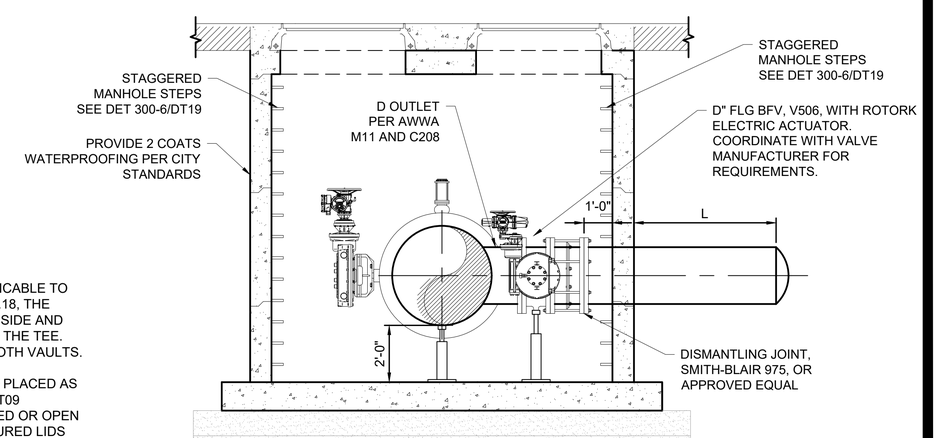

CONNECTION VAULTSECTION (B / DT16)
NOT TO SCALE

SERVICE VALVE TABLE							
Number	Station	FLANGE CLASS	D	L	TEE DIRECTION	MAINLINE VALVE LOCATION	LOCKING LID (SEE DET4/DT14)
1	149+65.54'	AWWA C207 CLASS E	24"	5'	AS SHOWN	AS SHOWN	Y
2	170+00.00'	AWWA C207 CLASS E	42"	50'	OPPOSITE HAND	OPPOSITE SIDE OF TEE	Y

AECOM

Thornton WATER PROJECT

TWP SEG A, PHASE 1
PROJECT No. 12-777H5

CLIENT

CITY OF THORNTON
12450 WASHINGTON ST,
THORNTON, CO 80241
720.977.6700 tel 000.000.0000 fax
www.thorntonwaterproject.com

CONSULTANT

AECOM
7595 TECHNOLOGY WAY, STE 200
DENVER, CO 80237
T 303.694.2770 F 303.694.3946
www.aecom.com

ISSUE/REVISION

I/R	DATE	DESCRIPTION
E	10/15/2021	PRE-FINAL SUBMITTAL
C	04/27/2021	75% SUBMITTAL
B	09/25/2020	35% FINAL SUBMITTAL
A	04/21/2020	35% SUBMITTAL

VERIFIED SCALES

BAR IS ONE INCH ON ORIGINAL DRAWING
0 1"
IF NOT ONE INCH ON THIS SHEET, ADJUST SCALES ACCORDINGLY

DRAWN BY:	SEM/JEC
CHKD BY:	MG
CHKD BY:	CAT
APPD BY:	WEW

PROJECT NUMBER
60619101

SHEET TITLE
VAULT FOR FUTURE CONNECTION DETAILS

SHEET NUMBER
DT17

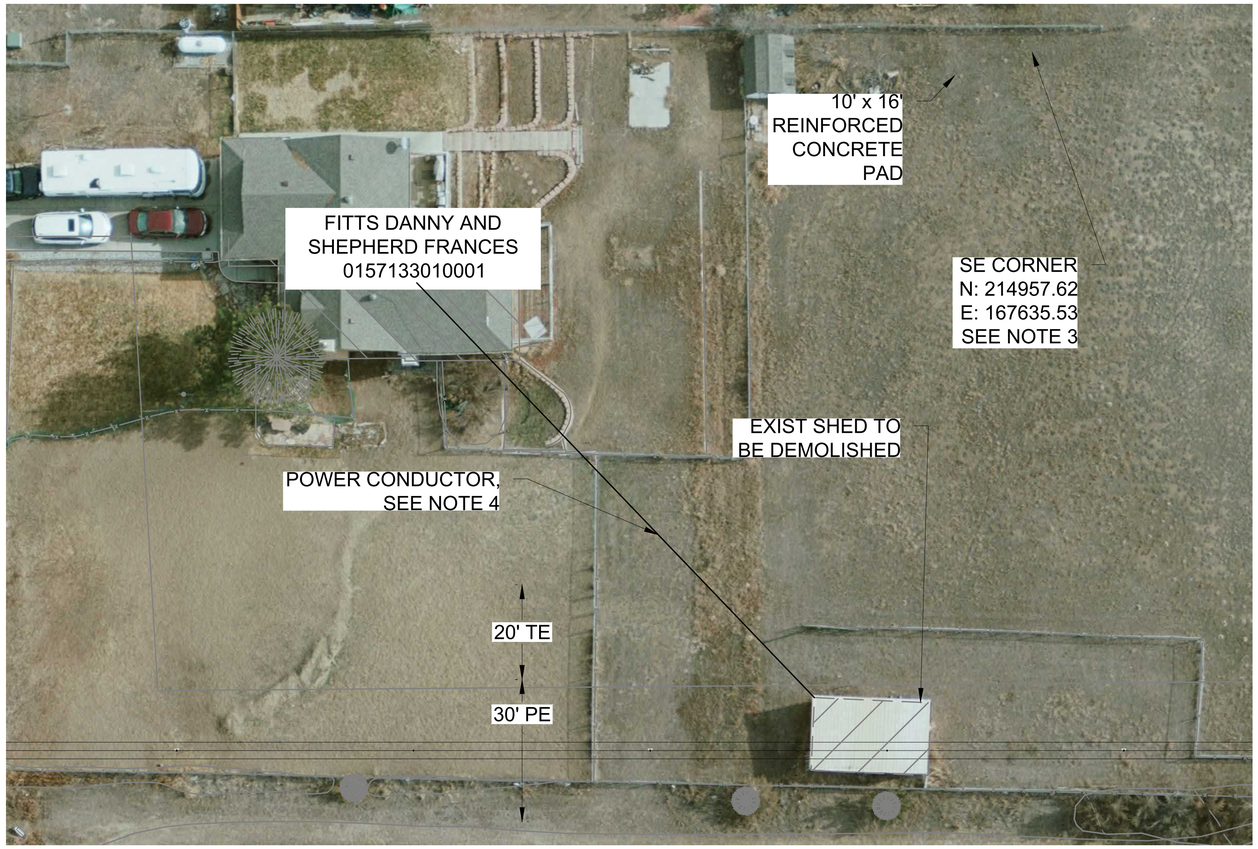

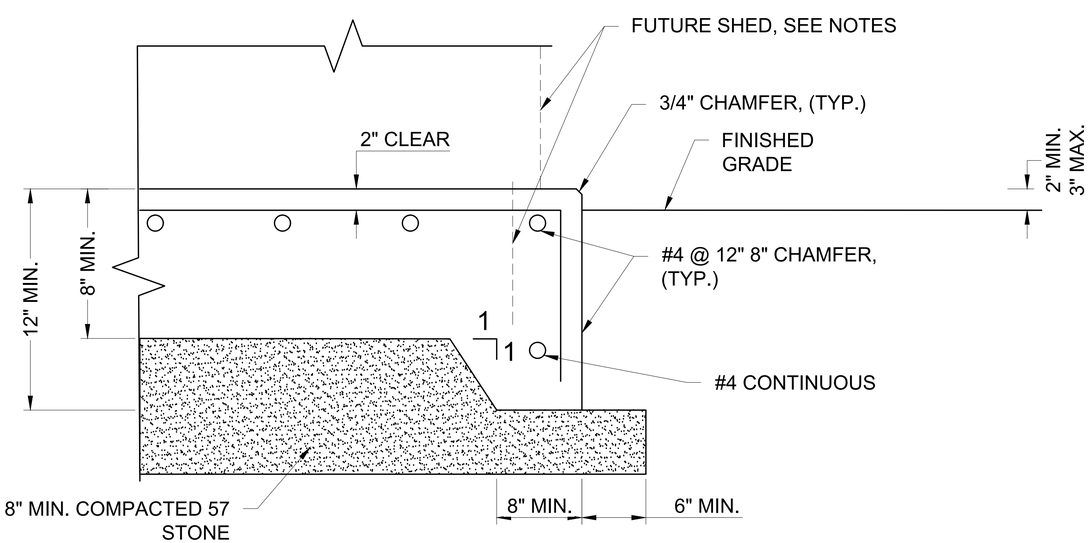

FUTURE SHED FOUNDATION DETAIL (1 / DT18)
NOT TO SCALE

NOTES:

1. CONCRETE 28-DAY COMPRESSIVE STRENGTH SHALL BE 4500 PSI AND CONCRETE SHALL BE AIR ENTRAINED WITH AIR CONTENT 6% +/- 1-1 1/2%.
2. FUTURE SHED DESIGN CONSTRUCTION AND ANCHORAGE IS BY OTHERS (NOT IN CONTRACT).
3. LOCATION SHOWN IS APPROXIMATE. COORDINATE EXACT LOCATION WITH PROPERTY OWNER.
4. CONDUCTOR IS NOT INSTALLED IN CONDUIT. EXACT TYPE NOT KNOWN. DISCONNECT AT SHED AND AT SOURCE AND REMOVE. COORDINATE WITH PROPERTY OWNER.

AECOM

Thornton WATER PROJECT

TWP SEG A, PHASE 1
PROJECT No. 12-777H5

CLIENT

CITY OF THORNTON
12450 WASHINGTON ST,
THORNTON, CO 80241
720.977.6700 tel 000.000.0000 fax
www.thorntonwaterproject.com

CONSULTANT

AECOM
7595 TECHNOLOGY WAY, STE 200
DENVER, CO 80237
T 303.694.2770 F 303.694.3946
www.aecom.com

ISSUE/REVISION

I/R	DATE	DESCRIPTION
E	10/15/2021	PRE-FINAL SUBMITTAL
C	04/27/2021	75% SUBMITTAL
B	09/25/2020	35% FINAL SUBMITTAL
A	04/21/2020	35% SUBMITTAL

VERIFIED SCALES

BAR IS ONE INCH ON ORIGINAL DRAWING
0 1"
IF NOT ONE INCH ON THIS SHEET, ADJUST SCALES ACCORDINGLY

DRAWN BY:	SEM/JEC
CHKD BY:	MG
CHKD BY:	CAT
APPD BY:	WEW

PROJECT NUMBER
60619101

SHEET TITLE
FITTS SLAB DETAIL

SHEET NUMBER
DT18

THIS DETAIL TO BE REVISED PENDING JURISDICTIONAL/NATIONWIDE PERMIT WETLAND DETERMINATIONS.

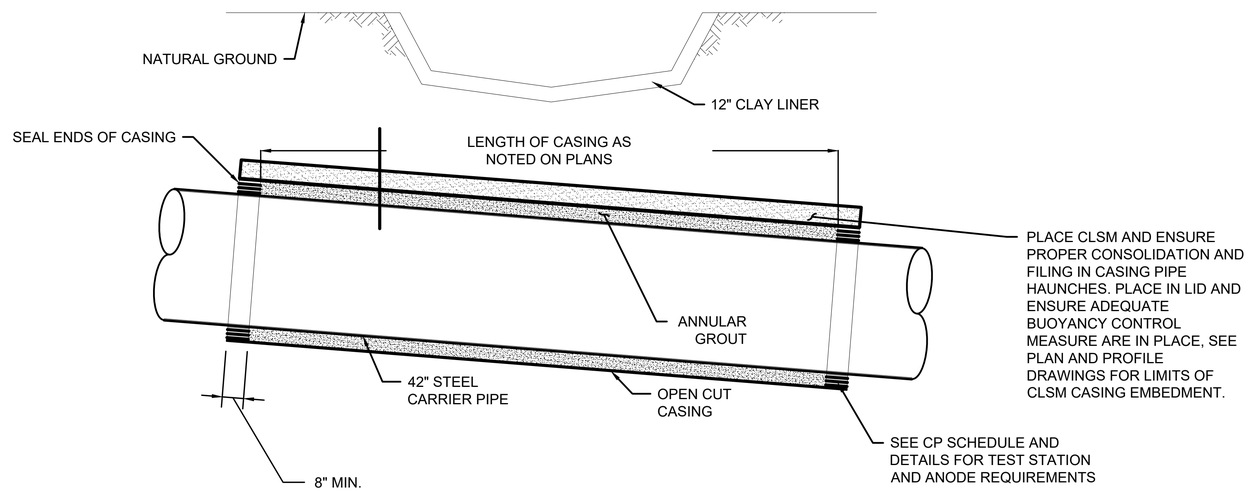

TYPICAL OPEN-CUT DITCH CROSSING INSTALLATION DETAIL — 1 / DT17

NOT TO SCALE

NOTES:

1. LENGTH OF OPEN CUT CASING INSTALLATION DITCH/CANAL CROSSING SHALL BE AS SHOWN ON PLAN AND PROFILE DRAWINGS.
2. CARRIER PIPE SHALL BE ISOLATED FROM STEEL CASING.
3. ALL ITEMS WELDED TO THE CASING DURING CONSTRUCTION SHALL BE REMOVED AND GROUND DOWN TO PREVENT UNINTENDED CONTACT WITH CARRIER PIPE.
4. INSTALL HOLD DOWN JACKS, BLOCKING, OR CASING SPACERS BETWEEN CASING AND CARRIER PIPE ON EACH JOINT TO RESIST FORCES/MOVEMENTS DURING ANNULAR GROUTING PLACEMENT AND PRIOR TO BACKFILLING. HOLD DOWN JACKS, BLOCKING,OR CASING SPACERS SHALL BE NON-CONDUCTING SYSTEM THAT WILL NOT CORRODE DAMAGE THE CARRIER PIPE.
5. CASING END SEALS/BULKHEADS SHALL BE SIZED TO ACCOMMODATE DIAMETER OF THE CASING PIPE. THESE SEALS SHALL BE INSTALLED USING NON CONDUCTIVE MATERIALS THAT WILL NOT CORRODE OR DAMAGED CARRIER PIPE. SECURE/STABILIZE THE END SEALS DURING GROUTING TO PREVENT SPILLOUT OF ANNULAR GROUT.
6. TEST CARRIER/HOST PIPE AND CASING PIPE FOR ELECTRICAL ISOLATION BY CERTIFIED CATHODIC PROTECTION TECHNICIAN, BEFORE AND AFTER ANNULAR GROUTING PLACEMENT AND PRIOR TO BACKFILLING THE TRENCH.
7. SEE NOTE 6, DT02 FOR INFORMATION ON FIBER OPTIC CONDUITS.
8. INSTALL 12" CLAY LINER ALONG THE DITCH/CANAL 5'-0" UPSTREAM AND 5'-0" DOWNSTREAM FROM THE EDGE OF THE TRENCH.
9. CONTRACTOR SHALL MATCH EXISTING GRADES PRIOR TO INSTALLATION OF OPEN CUT CROSSING/CASING.

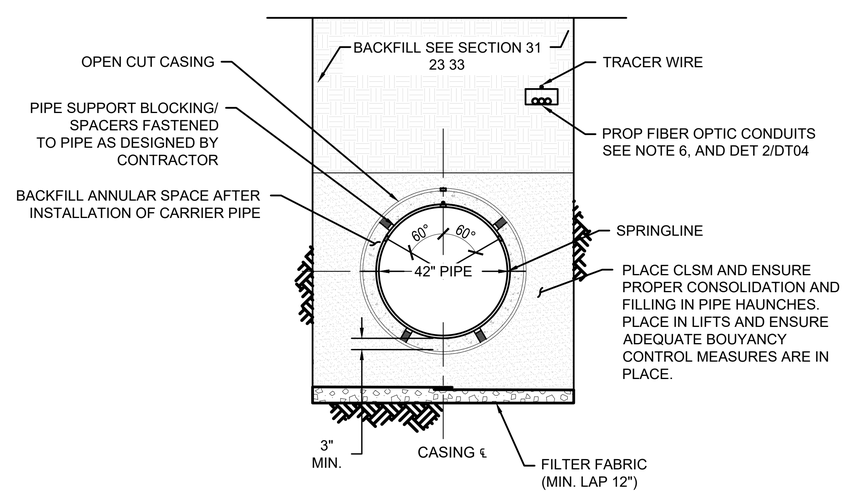

TYPICAL OPEN-CUT DITCH CROSS SECTION-STEEL CASING PIPE — 2 / DT17

NOT TO SCALE

C:\pwworking\aecom_ds20_na_2019\jenna.crouch@aecom.com\d0105067\DT17.dwg

AECOM

Thornton WATER PROJECT

TWP SEG A, PHASE 1
PROJECT No. 12-777H5

CLIENT

CITY OF THORNTON
12450 WASHINGTON ST,
THORNTON, CO 80241
720.977.6700 tel 000.000.0000 fax
www.thorntonwaterproject.com

CONSULTANT

AECOM
7595 TECHNOLOGY WAY, STE 200
DENVER, CO 80237
T 303.694.2770 F 303.694.3946
www.aecom.com

ISSUE/REVISION

I/R	DATE	DESCRIPTION
E	10/15/2021	PRE-FINAL SUBMITTAL
C	04/27/2021	75% SUBMITTAL
B	09/25/2020	35% FINAL SUBMITTAL
A	04/21/2020	35% SUBMITTAL

VERIFIED SCALES

BAR IS ONE INCH ON ORIGINAL DRAWING
0 1"
IF NOT ONE INCH ON THIS SHEET, ADJUST SCALES ACCORDINGLY

DRAWN BY:	SEM/JEC
CHKD BY:	MG
CHKD BY:	CAT
APPD BY:	WEW

PROJECT NUMBER

60619101

SHEET TITLE

TYPICAL OPEN-CUT DITCH CROSSING DETAILS

SHEET NUMBER

DT19

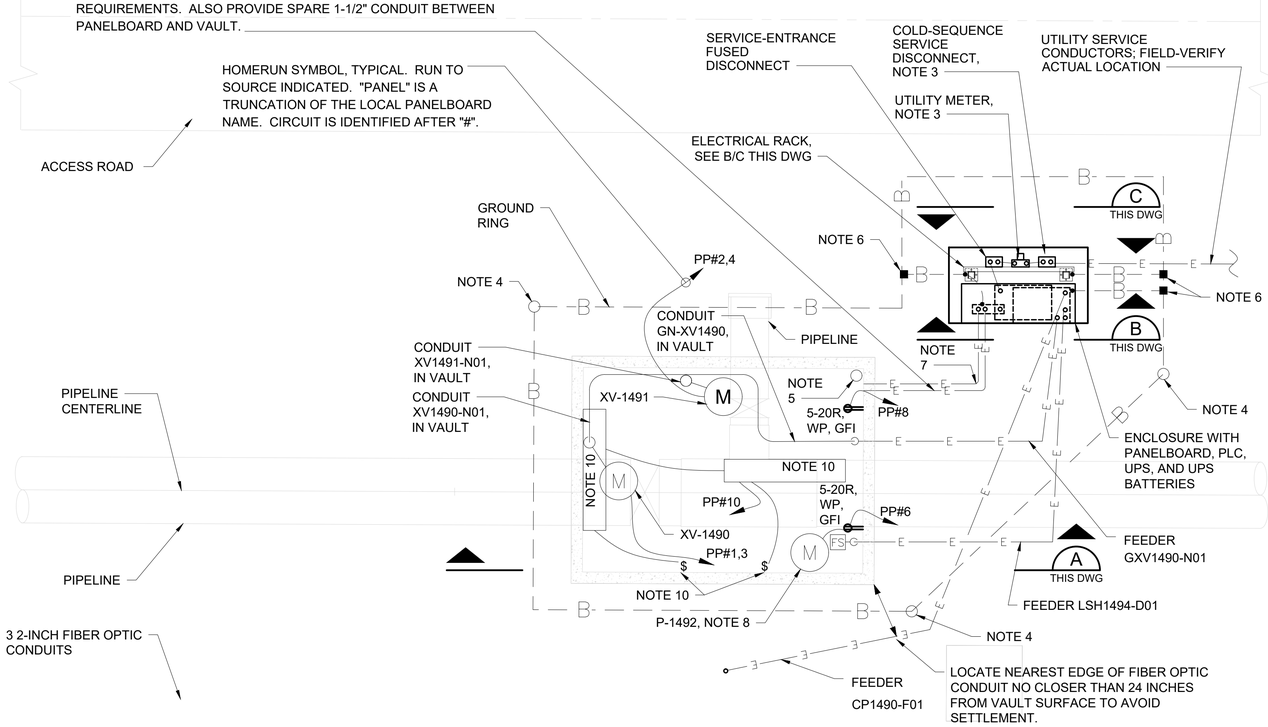

ELECTRICAL PLAN (1)

SCALE: 1/4" = 1'

SEE NOTES 1, 2, 7, 9, & 11

NOTES:

1. REFER TO ONE-LINE DIAGRAMS, SHEET DT19, FOR POWER FEEDER DESIGNATIONS.
2. THIS IS AN ENLARGED VIEW FOR LIMITED ELECTRICAL SCOPE. REFERENCE SHEET PP15 FOR ADDITIONAL SITE CONTEXT AND INFORMATION.
3. COORDINATE WITH ELECTRIC UTILITY AND LOCATE METER AND COLD-SEQUENCE DISCONNECT ON SIDE OF RACK NEAREST SOURCE OF SUPPLY.
4. PROVIDE 10-FOOT x 3/4-INCH COPPER-CLAD GROUND ROD, BOND TO GROUND RING WITH #4/0 SOFT-DRAWN BARE CU.
5. PROVIDE 10-FTx3/4-INCH COPPER-CLAD GROUND ROD AT VAULT WALL AND BOND VIA GROUND RING AT 40 INCHES BELOW-GRADE, 3-FOOT OFFSET FROM VAULT AND PAD, USING #4/0 SOFT-DRAWN BARE CU. ADJUST TO MIDWAY WHERE BETWEEN VAULTS. PROVIDE UFER GROUND IN VAULT IF CAST IN PLACE.
6. BOND ELECTRICAL RACK TO GROUND RING USING #3/0 INSULATED CU IN SCH 40 SUNLIGHT-RATED PVC CONDUIT. BOND MECHANICALLY TO STRUT FRAME AT BOTH ENDS, AND BOND TO SYSTEM BONDING JUMPER. EXTEND CONDUIT BELOW-GRADE TO EXOTHERMIC BOND AT GROUND RING.
7. NOT SHOWN - PROVIDE BOND TO UFER GROUND PROVIDED WITH VAULT USING #4 SOLID BARE CU. ROUTE IN SCH 40 SUNLIGHT-RATED PVC CONDUIT WHERE PENETRATING CONCRETE, AND WHERE EXPOSED ABOVE-GRADE.
8. PROVIDE ELECTRICAL INSTALLATION OF SUMP PUMP THAT INCLUDES INTEGRAL FLOAT CONTROL. COORDINATE WITH OTHER TRADES FOR EXACT REQUIREMENTS. PLUG VIA ADJACENT RECEPTACLE, AND COORDINATE RECEPTACLE WITH ACTUAL PLUG.
9. THIS SHEET SHOWS PARTIAL FIBER OPTIC AND TELECOMMUNICATIONS INFORMATION. COORDINATE WITH NETWORK SERVICE PROVIDER FOR ADDITIONAL ROUTING CONTEXT, ACCESS, AND REQUIREMENTS.
10. PROVIDE 10,000-LUMEN (NOMINAL) LED ENCLOSED LUMINAIRE WITH MEDIUM DISTRIBUTION, BASIS OF DESIGN IS LITHONIA "FEM L48 10000LM IMACD MD MVOLT GZ10 40K 90CRI WLFEND STSL BAA FEMSMB"; EQUALS ARE ACCEPTABLE. PROVIDE SEPARATE CONTROL FROM TIMER SWITCH WITH WEATHERPROOF ENCLOSURE. ADD ENGRAVED PLASTIC LABEL TO ONE TIMER SWITCH, "SET ONE TIMER 2 MINUTES LONGER THAN THE OTHER". LOCATE SWITCHES ONE FOOT BELOW STRUCTURAL CEILING. FEED UNSWITCHED AND SWITCHED CONDUCTORS TO SWITCH IN SAME CONDUIT.
11. CONDUITS FOR INSTRUMENTATION AND CONTROL ARE SHOWN IN PLAN BUT ELECTRICAL CONDUITS ARE INFERRED BY HOMERUNS. ROUTE CONDUITS FOR POWER SIMILARLY TO I&C CONDUITS, ROUTING ON VAULT WALLS AND STRUCTURAL CEILING. DO NOT SECURE CONDUITS TO REMOVABLE ROOF PANEL.
12. PROVIDE MODICON PROGRAMMABLE LOGIC CONTROLLER WITH NETWORK SWITCH AS REQUIRED TO COMMUNICATE TO OTHER OWNER FACILITIES USING THE OS2 FIBER OPTIC NETWORK. PROVIDE WALL-MOUNT STYLE CASSETTE HOUSING WITHIN PLC ENCLOSURE FOR FUTURE INSTALLATION OF TWO 12-FIBER DUPLEX LC CASSETTES. CASSETTES ARE TO BE PROVIDED UNDER A SEPARATE PROJECT. PROGRAM PLC OR MODBUS TCP GATEWAY TO FORWARD DATA POINTS IN CONTIGUOUS REGISTERS, WITH READ-WRITE REGISTERS SEPARATE FROM READ-ONLY REGISTERS. PROVIDE TWO SFP PORTS ON NETWORK SWITCH, WITH LOOP PROTOCOL CAPABILITY, WITH TWO SFP MODULES, EACH COMMUNICATING WITH 100 MBPS LX PROTOCOL OVER DUPLEX LC CONNECTORS. COORDINATE WITH OWNER FOR REQUIRED LOSS BUDGET FOR THIS SMALL FORM FACTOR SWITCH. ENCLOSE CONTROL AND COMMUNICATIONS HARDWARE WITHIN A LOCKABLE UL 508A-LISTED NEMA 4 CONTROL PANEL. I/O FOR FLOAT SWITCH. PROVIDE CIRCUIT BREAKER DISCONNECT FOR OVERALL PANEL. ENSURE ALL INTERNAL EQUIPMENT IS RATED FOR MAXIMUM AND MINIMUM PANEL TEMPERATURES, AS APPROPRIATE FOR SUN-LIT LOCATIONS AT PROJECT LOCATION. PROVIDE PATCH CABLES, WIRE LOOM, AND ALL OTHER FEATURES AS REQUIRED FOR SCADA UPLINK AND UL508A COMPLIANCE. LOCATE CASSETTE HOUSING AT INTERIOR RIGHT SIDE OF ENCLOSURE, OREINTED TO ACCEPT CABLE FROM COMMUNICATIONS CONDUIT WITH MINIMAL BENDING. CONTROLLER TO BE COMPATIBLE WITH M580 PLC UNITS AT OTHER SYSTEM FACILITIES.FAHRENHEIT OR BELOW.

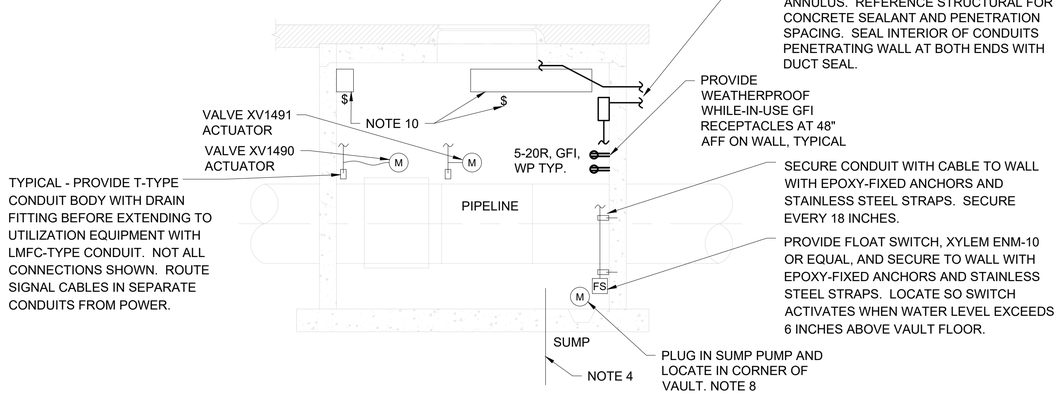

ELEVATION - VAULT (A)

SCALE: 1/4" = 1'

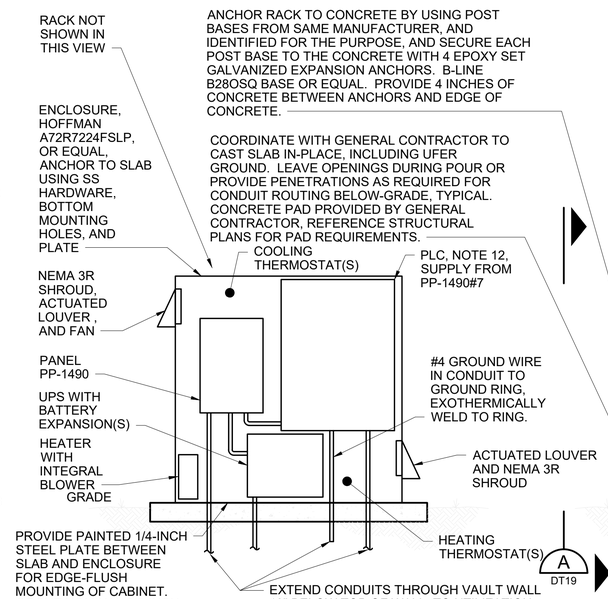

ELEVATION - PAD ENCLOSURE (B)

NO SCALE

SEE NOTE 9

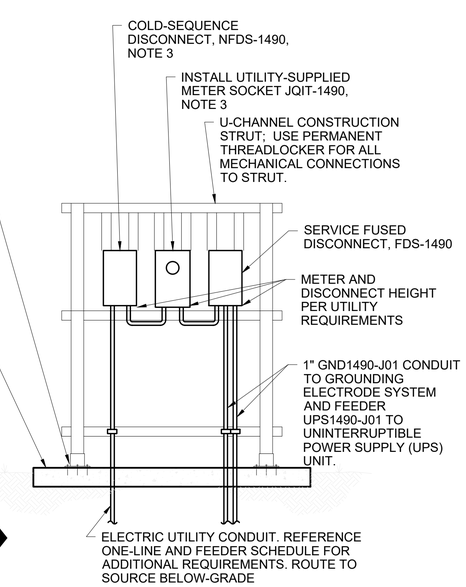

ELEVATION - ELECTRICAL RACK (C)

NO SCALE

AECOM

Thornton WATER PROJECT

TWP SEG A, PHASE 1
PROJECT No. 12-777H5

CLIENT

CITY OF THORNTON
12450 WASHINGTON ST,
THORNTON, CO 80241
720.977.6700 tel 000.000.0000 fax
www.thorntonwaterproject.com

CONSULTANT

AECOM
7595 TECHNOLOGY WAY, STE 200
DENVER, CO 80237
T 303.694.2770 F 303.694.3946
www.aecom.com

ISSUE/REVISION

I/R	DATE	DESCRIPTION
E	10/15/2021	PRE-FINAL SUBMITTAL
C	04/27/2021	75% SUBMITTAL
B	09/25/2020	35% FINAL SUBMITTAL
A	04/21/2020	35% SUBMITTAL

VERIFIED SCALES

BAR IS ONE INCH ON ORIGINAL DRAWING
0 1"
IF NOT ONE INCH ON THIS SHEET, ADJUST SCALES ACCORDINGLY

DRAWN BY:	SEM/JEC
CHKD BY:	BS
CHKD BY:	CAT
APPD BY:	WEW

PROJECT NUMBER

60619101

SHEET TITLE

HAMMER CONNECTION VALVE VAULT ELECTRICAL PLAN

SHEET NUMBER

DT20

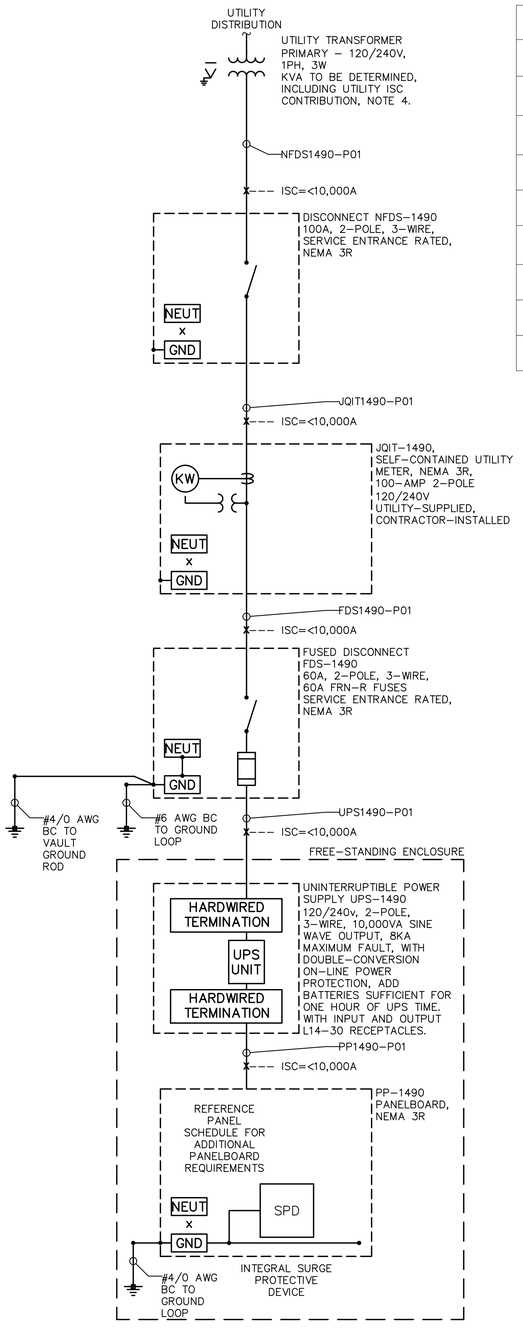

ELECTRICAL ONE-LINE DIAGRAM (1)

NO SCALE

BILL OF MATERIALS

ITEM	QTY	DESCRIPTION	MANUFACTURER	NOTES
1	AS REQ.	CHANNEL, 12 GAGE , SOLID, 1–5/8" X 1–5/8",	UNISTRUT P1000	
2	AS REQ.	CHANNEL, BACK–TO–BACK 12 GAGE, SOLID, 1–5/8" X 3–1/4"	UNISTRUT P1001	
3	**AS REQ.**	ADJUSTABLE BRACE FITTING	UNISTRUT P2815	
4	**AS REQ.**	POST BASE, 1–5/8"	UNISTRUT P2072A SQ	
5	AS REQ.	BOLT, HEX HEAD, 1/4" x 1"LG, S.S.	–	
6	AS REQ.	WASHER, FLAT, 1/4", 316SS	–	
7	AS REQ.	WASHER, LOCK, 1/4", 316SS	–	
8	AS REQ.	CHANNEL NUTS W/SPRING	UNISTRUT P1006–1420	

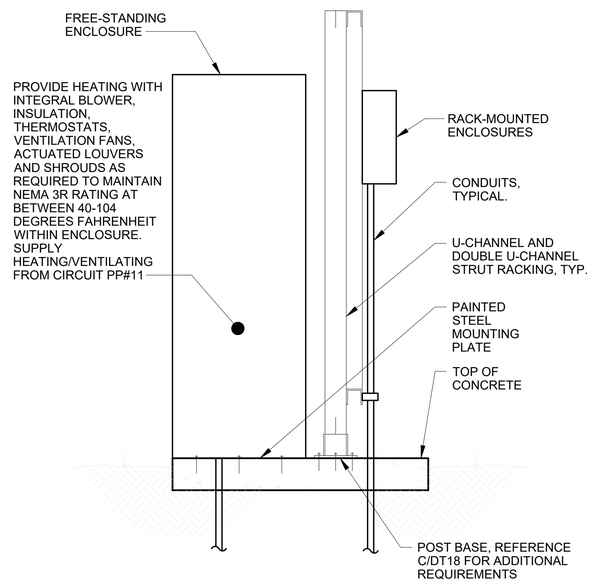

SIDE VIEW

ELEVATION - ELECTRICAL RACK (A)

NO SCALE

SEE NOTES 1, 2, 3, 4, & 7

CONTRACTOR IS RESPONSIBLE FOR DESIGN AND IMPLEMENTATION OF HEATING AND COOLING PACKAGE FOR ENCLOSURE USING CONTRACTOR-SUBMITTED MATERIALS. ENSURE TEMPERATURES ARE MAINTAINED BETWEEN 40 AND 104 DEGREES FAHRENHEIT. USE OF MOTORIZED LOUVERS IS MANDATORY FOR HEATING POWER CONSERVATION.

DESIGN ASSUMES A 120/240V 1PH 3W UTILITY CONNECTION WITH LESS THAN 8,000 AMPS OF CONTRIBUTION. COLLABORATE WITH ENGINEER IF UTILITY DEVIATES FROM THESE PARAMETERS.

NOTES:

1. ANCHOR EQUIPMENT TO SLAB WITH EPOXY-FIXED EXPANSION ANCHORS. PROVIDE 1/4-INCH SPACING BETWEEN STEEL AND SLAB AND GROUT GAP.
2. COORDINATE WITH GENERAL CONTRACTOR TO PROVIDE ADDITIONAL REINFORCEMENT "BLOCK OUT" AROUND MULTIPLE CONDUIT PENETRATIONS.
3. PROVIDE ADDITIONAL STRUT AS REQUIRED TO ACCOMMODATE ACTUAL RACK-MOUNTED ENCLOSURES.
4. FIELD-VERIFY THAT UTILITY SERVICE PROVIDED DOES NOT EXCEED 8,000 AMPERES. NOTIFY ENGINEER IF LARGER FAULT CURRENT IS AVAILABLE AND PROVIDE SHORT-CIRCUIT-RATED EQUIPMENT AS APPROPRIATE.
5. NOT USED.
6. PROVIDE SHIELDED TWISTED-PAIR CABLE IDENTIFIED FOR RS-485 COMMUNICATION CIRCUITS, ALPHA WIRE 6454, BELDEN 3106A, OR EQUAL.
7. PROGRAM PLC TO LIMIT VALVES ACTUATING AT ANY ONE TIME TO ONE.

FEEDER SCHEDULE

EQUIPMENT	FEEDER TAG	FROM	TO	WIRE	CONDUIT	PURPOSE
CP-1490	CP1490-F01	IT PROJECT	CP-1490	2 CABLES, 12-FIBER OS2 EACH	2" PVC80	COMM
LSH-1494	LSH1494-D01	CP-1490	LSH-1494	#16 STP CABLE	3/4" IMC	COMM
XV-1490 TEE BODY	GXV1490-N01	CP-1490	XV-1490 TEE	TWO RS-485 STP CABLES, NOTE 6	1-1/2" IMC	COMM
XV-1490	XV1490-N01	XV-1490 TEE	XV-1490	TWO RS-485 STP CABLES, NOTE 6	1" IMC	COMM
XV-1491	XV1491-N01	XV-1490 TEE	XV-1491	TWO RS-485 STP CABLES, NOTE 6	1" IMC	COMM
UTILITY COLD SEQUENCE DISCONNECT	NFDS1490-P01	UTILITY	NFDS-1490	3#2	2" PVC80	POWER
JQIT-1490 ELECTRIC UTILITY METER	JQIT1490-P01	NFDS-1490	JQIT-1490	3#2+#6G	1-1/2" IMC	POWER
SERVICE DISCONNECT - FUSED	FDS1490-P01	JQIT-1490	FDS-1490	3#2+#6G	1-1/2" IMC	POWER
UPS WITHIN ENCLOSURE - SUPPLY RECEPT.	UPS1490-P01	FDS-1490	UPS1490-P01	3#4+#6G	1-1/4" IMC	POWER
PP-1490 ELECTRIC POWER PANEL	PP1490-P01	UPS-1490	PP-1490	3#4+#6G	1-1/4" IMC	POWER
XV-1490	XV1490-P01	PP-1490	XV-1490	2#10+#10G	3/4" IMC	POWER
XV-1491	XV1491-P01	PP-1490	XV-1491	2#10+#10G	3/4" IMC	POWER
P-1492	P1490-P01	PP-1490	P-1492	2#10+#10G	3/4" IMC	POWER
VAULT GROUNDING SYSTEM	GND1490-P01	PP-1490	ROD/UFER	#4/0 BARE CU	1" IMC	POWER

QUEBEC & E-470 VALVE VAULT 120/240V PANELBOARD								VOLTAGE 120/240V, 1-PHASE, 3-WIRE			
REFERENCE SHEET NOTE 4								100A COPPER BUS, INTEGRAL SURGE PROT'N.			
10KAIC, SURFACE MOUNTED, NEMA 3R				LOADS (VA)				100/2 MAIN BREAKER			
CIRCUIT DESCRIPTION	TYPE	BKR	CIR	PHASE A		PHASE B		CIR	BKR	TYPE	CIRCUIT DESCRIPTION
VALVE XV-1490	M	20A	1	1,000	1,000			2	20A	M	XV-1491
(2-POLE)	M	2P	3			1,000	1,000	4	2P	M	(2-POLE)
SPACE	S	N/A	5	0	1,200			6	20A	M	P-1492
CP-1490	O	15A	7			200	180	8	20A	R	VAULT CONV. REC.
SPARE	S	15A	9	0	124			10	15A	L	LIGHTING - VAULT
HEATING / FAN(S) / LOUVERS	O	N/A	11			1,000	0	12	15A	S	SPARE
SPACE	S	N/A	13	0	0			14	20A	S	SPARE
SURGE PROTECTION	O	30A	15			N/A	0	16	N/A	S	SPACE
(2-POLE)	O	2P	17	N/A	0			18	N/A	S	SPACE
TOTAL VOLT-AMPERES				3,324		3,380					
TOTAL CONNECTED LOAD (AMPS) =				6,704		VA / 240 =		27.9 AMPS			

	TYPE	CONN	F.F.	LOAD	NOTES
LIGHTING LOADS	L	124	1.25	155	* PROVIDE PERSONNEL–PROTECTION TYPE GROUND FAULT CIRCUIT INTERRUPTER FEATURE FOR EACH CIRCUIT BREAKER. * ALSO PROVIDE MANUFACTURER'S PADLOCKING CIRCUIT BREAKER FEATURE FOR EACH CIRCUIT BREAKER.
RECEPTACLE LOADS (1st 10KVA)	R	180	1.00	180	
RECEPTACLE LOADS (BALANCE)	R	0	0.50	0	
MOTOR LOADS	M	5,200	1.00	5,200	
LARGEST MOTOR	ML	2,000	0.25	500	
OTHER LOADS	O	1,200	1.25	1,500	
SPARE LOADS	S	0	0.00	0	
FEEDER LOAD (AMPS) =		7,535	VA / 240 =	31.4 AMPS	

AECOM

Thornton WATER PROJECT

TWP SEG A, PHASE 1
PROJECT No. 12-777H5

CLIENT

CITY OF THORNTON
12450 WASHINGTON ST,
THORNTON, CO 80241
720.977.6700 tel 000.000.0000 fax
www.thorntonwaterproject.com

CONSULTANT

AECOM
7595 TECHNOLOGY WAY, STE 200
DENVER, CO 80237
T 303.694.2770 F 303.694.3946
www.aecom.com

ISSUE/REVISION

I/R	DATE	DESCRIPTION
E	10/15/2021	PRE-FINAL SUBMITTAL
C	04/27/2021	75% SUBMITTAL
B	09/25/2020	35% FINAL SUBMITTAL
A	04/21/2020	35% SUBMITTAL

VERIFIED SCALES

BAR IS ONE INCH ON ORIGINAL DRAWING
0 1"
IF NOT ONE INCH ON THIS SHEET, ADJUST SCALES ACCORDINGLY

DRAWN BY: SEM/JEC
CHKD BY: BS
CHKD BY: CAT
APPD BY: WEW

PROJECT NUMBER

60619101

SHEET TITLE

HAMMER CONNECTION VALVE VAULT ELECTRICAL SCHEDULES AND DETAILS

SHEET NUMBER

DT21

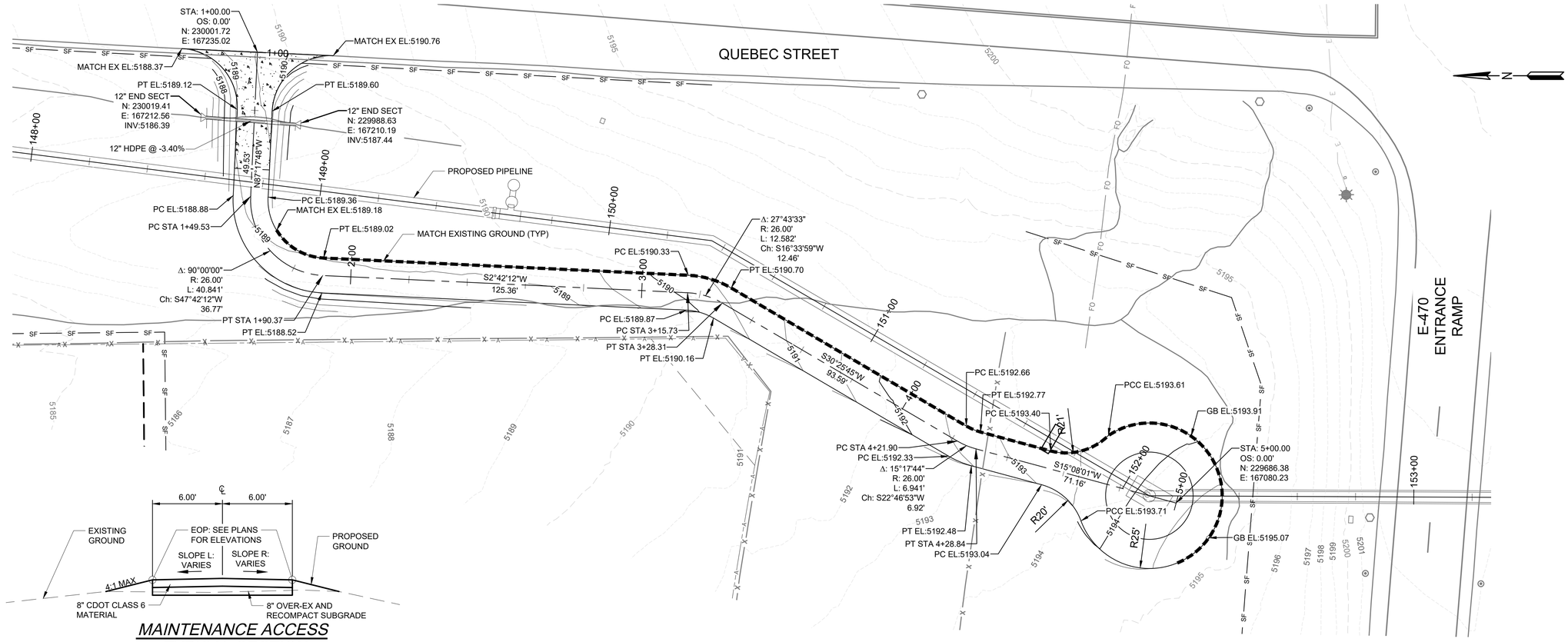

MAINTENANCE ACCESS TYPICAL SECTION

NORTH ACCESS ROAD

STATION:	SLOPE L	SLOPE R:
1+00.00 (QUEBEC ST)	MATCH EX	MATCH EX
1+20.00	4.0%	-4.0%
1+65.00	EOP MATCH EX	-4.0%
4+53.76 (BEGIN CUL-DE-SAC)	EOP MATCH EX	-4.0%

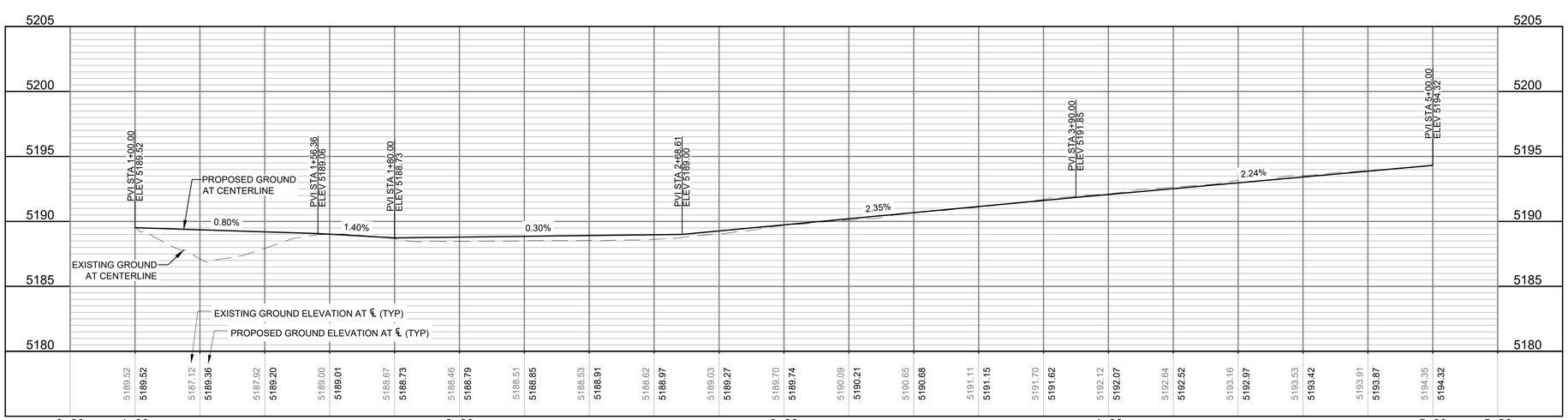

AECOM

Thornton WATER PROJECT

TWP SEG A, PHASE 1
PROJECT No. 12-777H5

CLIENT

CITY OF THORNTON
12450 WASHINGTON ST,
THORNTON, CO 80241
720.977.6700 tel 000.000.0000 fax
www.thorntonwaterproject.com

CONSULTANT

AECOM
7595 TECHNOLOGY WAY, STE 200
DENVER, CO 80237
T 303.694.2770 F 303.694.3946
www.aecom.com

ISSUE/REVISION

I/R	DATE	DESCRIPTION
E	10/15/2021	PRE-FINAL SUBMITTAL
C	04/27/2021	75% SUBMITTAL
B	09/25/2020	35% FINAL SUBMITTAL
A	04/21/2020	35% SUBMITTAL

VERIFIED SCALES

0 20 40
SCALE:HORIZ. 1"=20'
VERT. 1"=5'

BAR IS ONE INCH ON ORIGINAL DRAWING
0 1"
IF NOT ONE INCH ON THIS SHEET, ADJUST SCALES ACCORDINGLY

DRAWN BY: SEAWEC
CHKD BY: MGH
CHKD BY: CHH
APPD BY: WEW

PROJECT NUMBER

60619101

SHEET TITLE

E470 NORTH ACCESS ROAD DETAILS

SHEET NUMBER

DT22

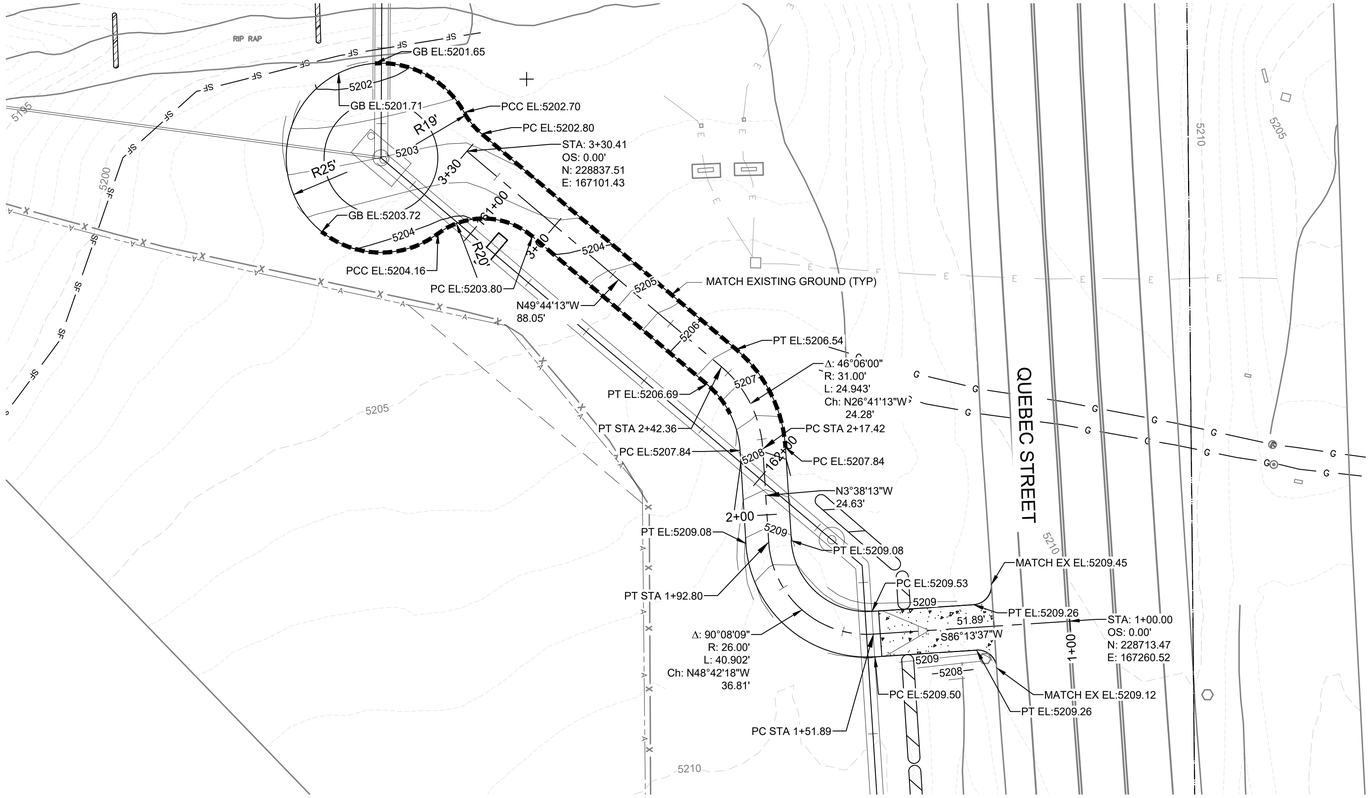

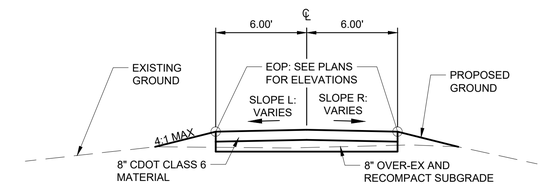

MAINTENANCE ACCESS TYPICAL SECTION

SOUTH ACCESS ROAD

STATION:	SLOPE L	SLOPE R:
1+20.00 (QUEBEC ST)	MATCH EX	MATCH EX
1+40.00	-2.0%	-2.0%
2+17.42	-2.0%	EOP MATCH EX
2+30.00	EOP MATCH EX	EOP MATCH EX
3+02.69 (BEGIN CUL-DE-SAC)	EOP MATCH EX	EOP MATCH EX

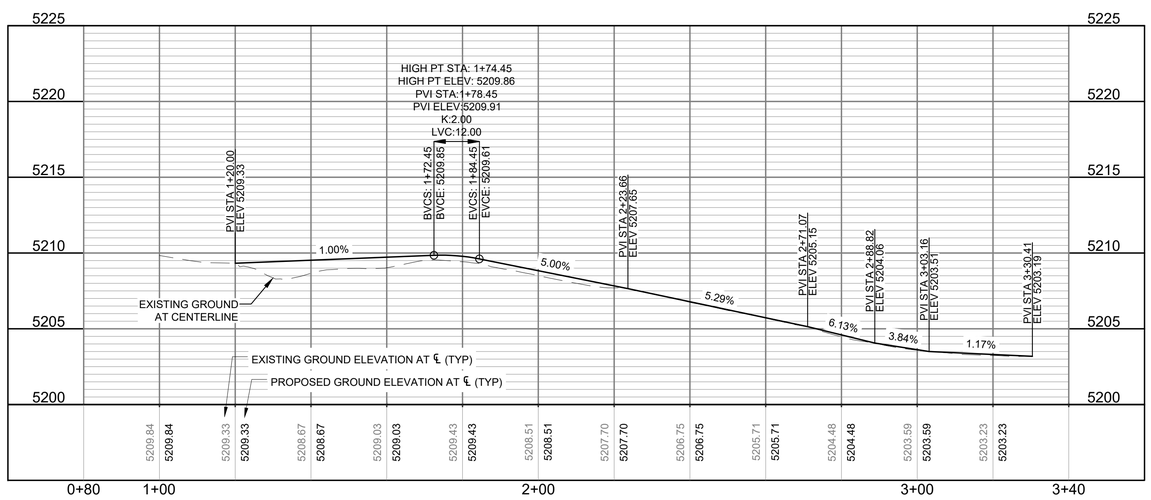

AECOM

Thornton WATER PROJECT

TWP SEG A, PHASE 1
PROJECT No. 12-777H5

CLIENT

CITY OF THORNTON
12450 WASHINGTON ST,
THORNTON, CO 80241
720.977.6700 tel 000.000.0000 fax
www.thorntonwaterproject.com

CONSULTANT

AECOM
7595 TECHNOLOGY WAY, STE 200
DENVER, CO 80237
T 303.694.2770 F 303.694.3946
www.aecom.com

ISSUE/REVISION

I/R	DATE	DESCRIPTION
E	10/15/2021	PRE-FINAL SUBMITTAL
C	04/27/2021	75% SUBMITTAL
B	09/25/2020	35% FINAL SUBMITTAL
A	04/21/2020	35% SUBMITTAL

VERIFIED SCALES

0 20 40
SCALE:HORIZ. 1"=20'
VERT. 1"=5'

BAR IS ONE INCH ON ORIGINAL DRAWING
0 1"
IF NOT ONE INCH ON THIS SHEET, ADJUST SCALES ACCORDINGLY

DRAWN BY: SEMIEC
CHKD BY: WGH
CHKD BY: DAH
APPD BY: WEW

PROJECT NUMBER

60619101

SHEET TITLE

E470 SOUTH ACCESS ROAD DETAILS

SHEET NUMBER

DT23 87 OF 216

C:\pwworking\aecom_ds20_na_2019\jenna.crouch@aecom.com\d0105067\DT27.dwg

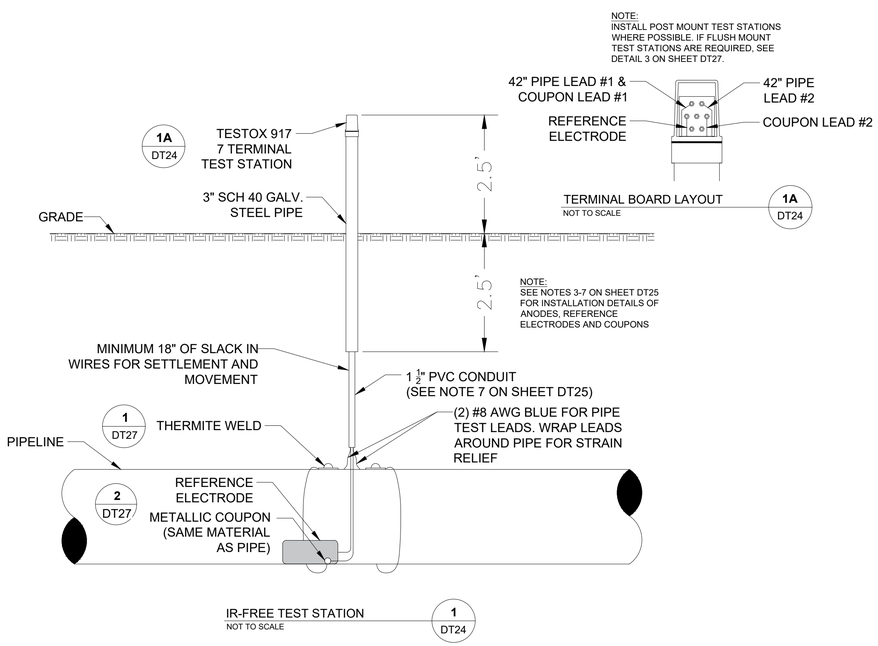

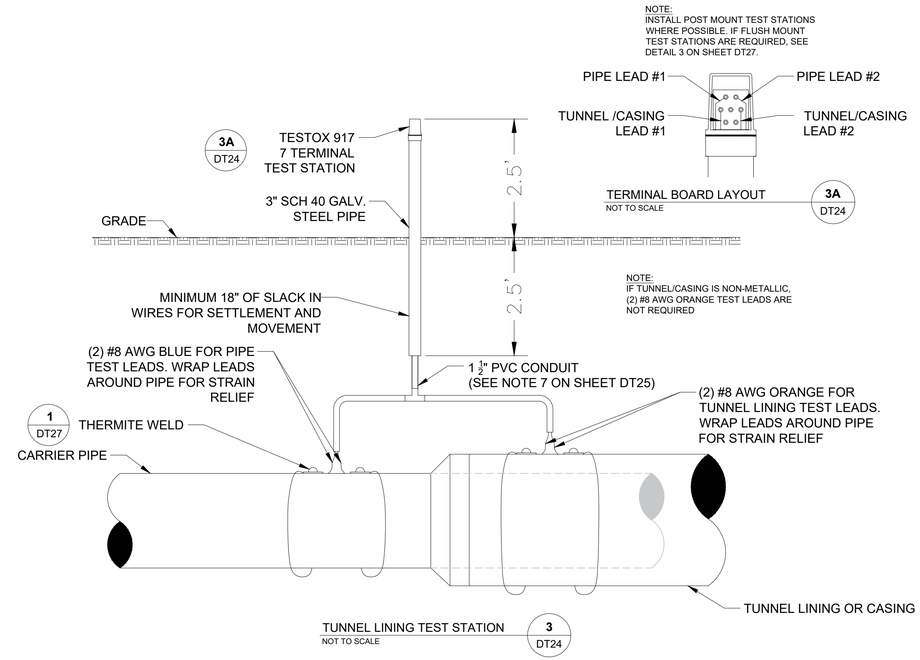

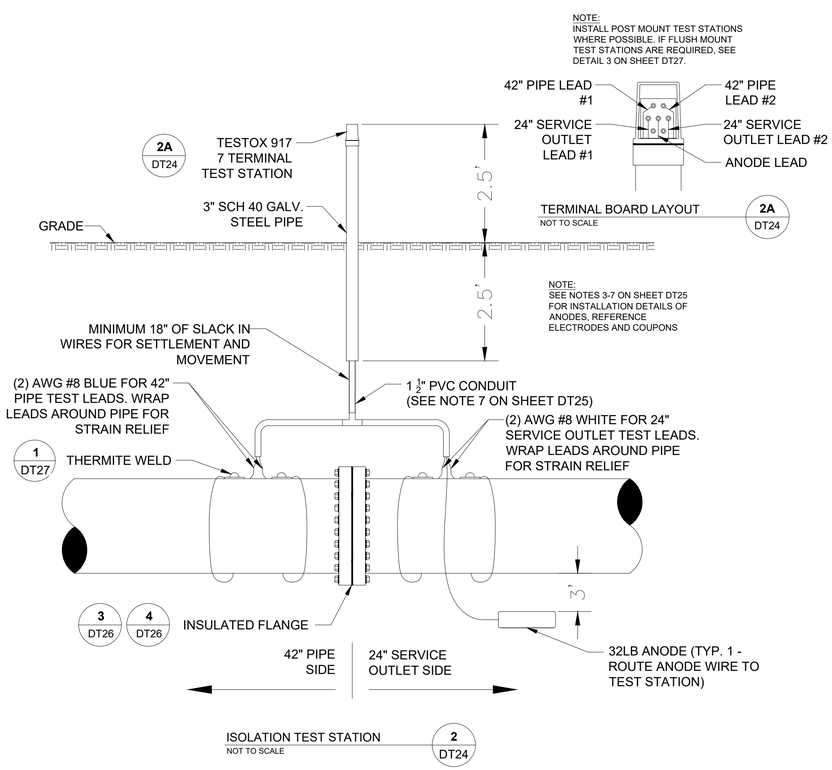

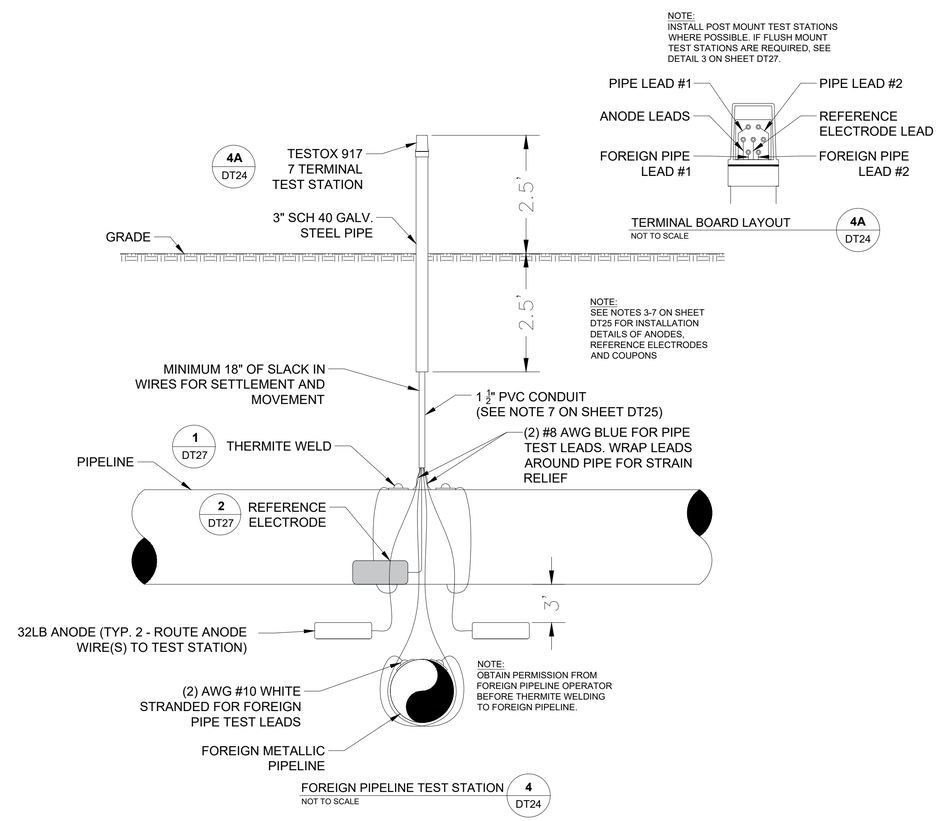

C:\SP\QualCorr\QC SP - Clients\THORNTON_TWP - ALL\TWP-Segment A 168th to Wes Brown WTP (20-033)\04 - Drafting\Segment A 1\NEW 95 PERCENT DWGS\A.1 DT24 95 PERCENT.dwg

AECOM

Thornton WATER PROJECT

TWP SEG A, PHASE 1
PROJECT No. 12-777H5

CLIENT

CITY OF THORNTON
12450 WASHINGTON ST,
THORNTON, CO 80241
720.977.6700 tel 000.000.0000 fax
www.thorntonwaterproject.com

CONSULTANT

AECOM
6200 South Quebec Street
Greenwood Village, Colorado 80111
T 303.694.2770 F 303.694.3946
www.aecom.com

SUBCONSULTANT

QUALCORR
3159 Commerce Court
Castle Rock, Colorado 80109
T 303.688.6103 F 303.688.6141
www.QualCorr.com

ISSUE/REVISION

I/R	DATE	DESCRIPTION
C	10/15/2021	ISSUED FOR 95% SUBMITTAL
B	08/16/2021	ISSUED FOR 90% SUBMITTAL
A	09/03/2021	75% SUBMITTAL

VERIFIED SCALES

BAR IS ONE INCH ON ORIGINAL DRAWING
0 1"
IF NOT ONE INCH ON THIS SHEET, ADJUST SCALES ACCORDINGLY

DRAWN BY:	MTJ
CHKD BY:	VWJ
CHKD BY:	CAS
APPD BY:	MMV

PROJECT NUMBER

60619101

SHEET TITLE

CATHODIC PROTECTION TEST STATION DETAILS

SHEET NUMBER

DT24

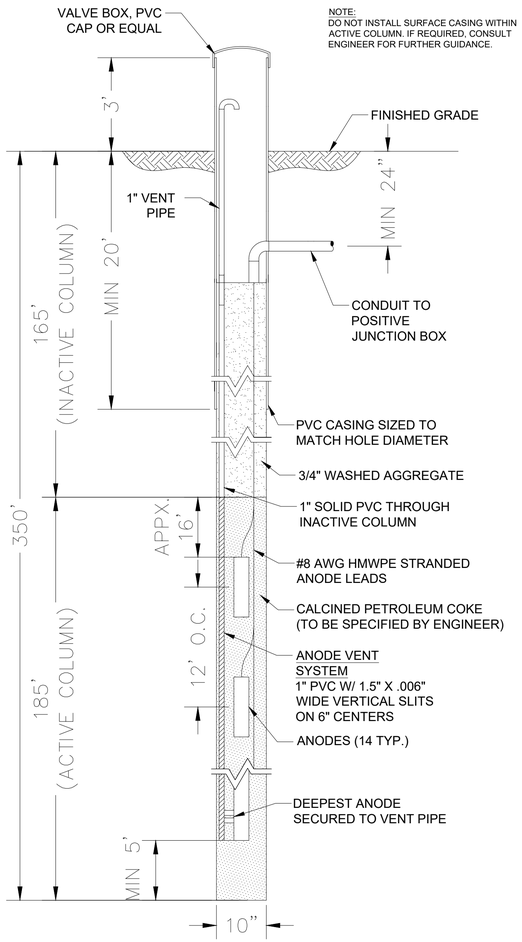

DEEP ANODE GROUNDBED
NOT TO SCALE
1 DT25

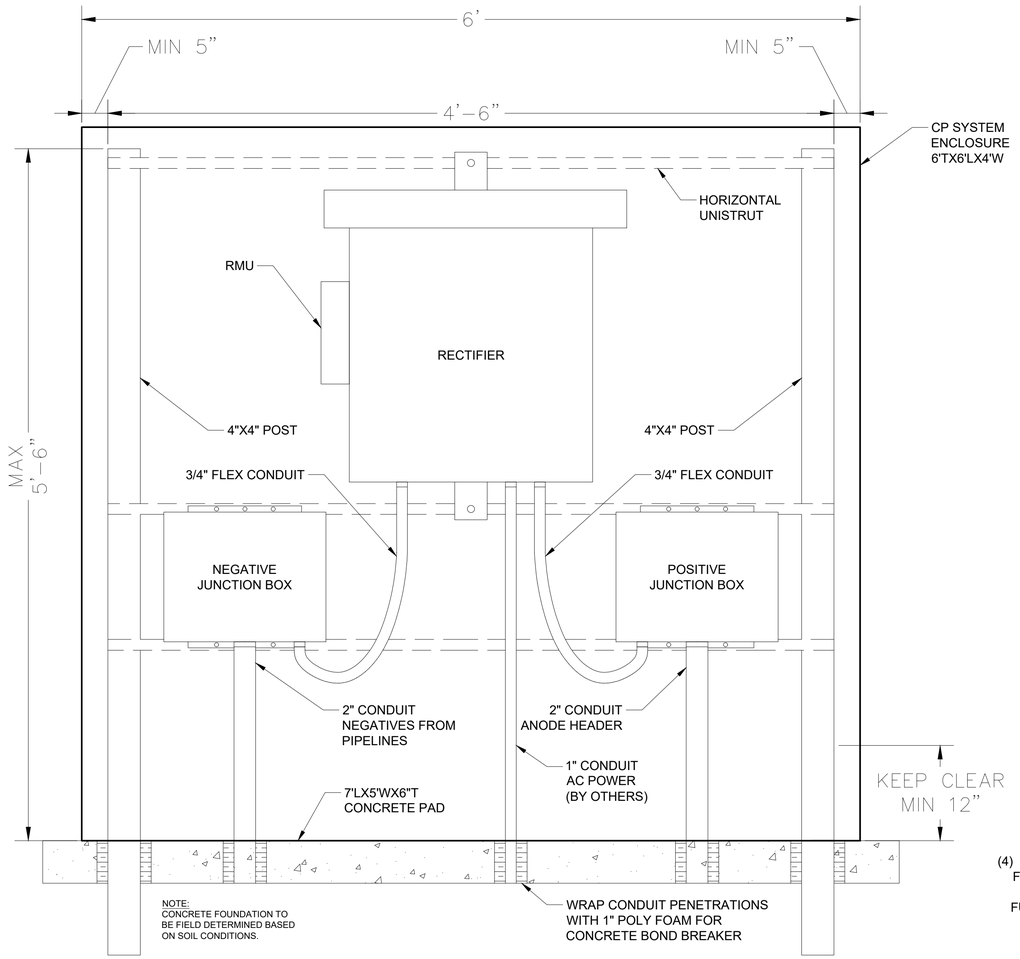

RECTIFIER/
JUNCTION BOX SETUP
NOT TO SCALE
2 DT25

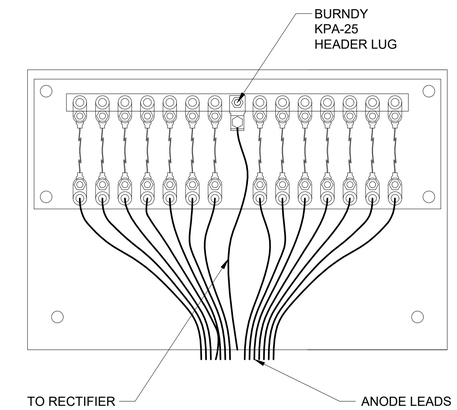

POSITIVE JUNCTION BOX
NOT TO SCALE
3 DT25

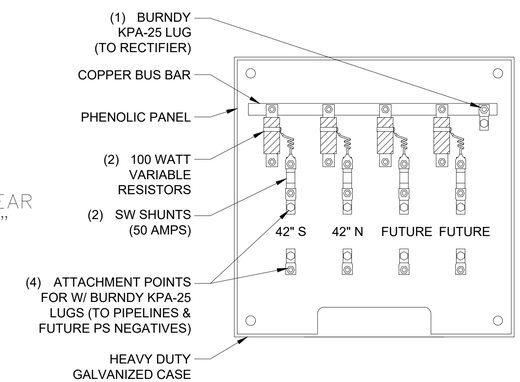

NEGATIVE JUNCTION BOX
NOT TO SCALE
4 DT25

GENERAL NOTES:

1. CONTRACTOR SHALL IMMEDIATELY NOTIFY THE ENGINEER OF ANY DISCREPANCIES BETWEEN THE PLANS FOR THIS PROJECT AND ACTUAL FIELD CONDITIONS WHICH MAY INTERFERE WITH THIS PROJECT.
2. NO BELOW GRADE SPLICING OF WIRES IS ALLOWED WITHOUT PRIOR APPROVAL FROM THE ENGINEER. CONTRACTOR SHALL ENSURE ALL WIRES ARE OF SUFFICIENT LENGTH FOR EACH INTENDED APPLICATION.
3. REMOVE ANODES AND REFERENCE ELECTRODES FROM PLASTIC OR OTHER SHIPPING BAG AND POSITION ACCORDING TO DETAIL DRAWINGS. DO NOT REMOVE CLOTH SACK. DO NOT PLACE IN PIPE BEDDING.
4. INSTALL REFERENCE ELECTRODES AND COUPONS IN NATIVE SOILS AND PLACE PARALLEL TO THE THE PIPE. DO NOT PLACE IN PIPE BEDDING. COUPONS SHALL CONSIST OF THE SAME MATERIAL AS THE PIPE AT THE LOCATION OF INSTALLATION.
5. INSTALL ANODES IN NATIVE SOILS A MINIMUM OF 3 FEET FROM EDGE OF PIPE OR ANY OTHER METALLIC OBJECT AND PLACE AT OR BELOW THE INVERT OF THE PIPE.
6. BACKFILL WITH NATIVE SOIL A MINIMUM OF 12 INCHES AROUND ANY REFERENCE ELECTRODES, COUPONS, OR ANODES THEN FLOOD EACH WITH A MINIMUM OF 5 GALLONS OF FRESH WATER. AFTER WATER ABSORPTION, CONTINUE BACKFILLING AS PER SPECIFICATIONS.
7. ROUTE ALL TEST LEADS AND ANODE WIRES IN 1 $\frac{1}{2}$ INCH CONDUIT BETWEEN THE PIPE AND THE TEST STATION BASE. THE CONDUIT WILL ALSO AID THE INSTALLER AS THE PIPELINE IS PADDED AND BACKFILLED BY PROVIDING MEANS TO LEAN THE TEST STATION AGAINST THE TRENCH WALL.
8. IF POSSIBLE, INSTALL TEST STATIONS OVER CENTERLINE OF PIPE. PLACE TEST STATIONS IN PROTECTED LOCATIONS (NEXT TO FENCES, APPURTENANCES, OUT OF ROADWAYS, ETC.) OR OTHER EASILY ACCESSIBLE AREAS.
9. PIPELINE CONTRACTOR IS RESPONSIBLE FOR MAINTAINING ELECTRICAL ISOLATION OF THE NEW PIPELINE FROM EXISTING PIPELINES, CONCRETE REBAR, ELECTRICAL GROUNDING, TUNNEL LININGS, PIPE SUPPORTS, OR OTHER METALLIC STRUCTURES.
10. DURING BACKFILL, INSTALL CATHODIC PROTECTION WARNING TAPE 12-18 INCHES ABOVE ANY CATHODIC PROTECTION WIRES OR DEVICES.
11. TYPICAL WIRE INSULATION COLORS:

BLUE = 42" PROJECT PIPE
WHITE = FUTURE, SERVICE OUTLET OR FOREIGN PIPE
ORANGE = CASING PIPE OR TUNNEL LININGS
BLACK = STRUCTURE/NEGATIVE CABLES, ANODE LEADS, JOINT/CONTINUITY BONDS
GREEN = METALLIC COUPON
YELLOW = REFERENCE ELECTRODE

12. SEE PROJECT SPECIFICATIONS FOR FURTHER INFORMATION.

DEEP ANODE GROUNDBED CATHODIC PROTECTION SYSTEM

GROUNDBED NAME /LOCATION	HOLE DIAMETER (IN)	NO. OF ANODES	ANODE TYPE	RECTIFIER SIZE	ANODE SPACING (FT)	ACTIVE COLUMN (FT)	COKE BREEZE BANK FROM TOP ANODE (FT)	TOTAL DEPTH (FT)	MINIMUM COKE BREEZE (LBS)
SEGMENT A.1	10	14	ANOTEC 2684Z	40V/35A	12	185	16	350	7500

AECOM

Thornton WATER PROJECT

TWP SEG A, PHASE 1
PROJECT No. 12-777H5

CLIENT

CITY OF THORNTON
12450 WASHINGTON ST,
THORNTON, CO 80241
720.977.6700 tel 000.000.0000 fax
www.thorntonwaterproject.com

CONSULTANT

AECOM
6200 South Quebec Street
Greenwood Village, Colorado 80111
T 303.694.2770 F 303.694.3946
www.aecom.com

SUBCONSULTANT

QUALCORR
3159 Commerce Court
Castle Rock, Colorado 80109
T 303.688.6103 F 303.688.6141
www.QualCorr.com

ISSUE/REVISION

I/R	DATE	DESCRIPTION
C	10/15/2021	ISSUED FOR 95% SUBMITTAL
B	08/16/2021	ISSUED FOR 90% SUBMITTAL
A	09/03/2021	75% SUBMITTAL

VERIFIED SCALES

BAR IS ONE INCH ON ORIGINAL DRAWING
0 1"
IF NOT ONE INCH ON THIS SHEET, ADJUST SCALES ACCORDINGLY

DRAWN BY: MTJ
CHKD BY: VWJ
CHKD BY: CAS
APPD BY: MMV

PROJECT NUMBER

60619101

SHEET TITLE

CATHODIC PROTECTION GROUNDBED DETAILS

SHEET NUMBER

DT25

CONTINUITY BONDING NOTES:

1. TYPICAL FOR NON-WELDED PIPING OR WELDED PIPING WITH MECHANICAL COUPLINGS.
2. CLEAN PIPE PRIOR TO THERMITE WELDING BONDS TO PIPING.
3. RHW INSULATED WIRE STRANDED COPPER BOND WIRES SHALL BE SIZED ACCORDING TO THE FOLLOWING TABLE UNLESS OTHERWISE NOTED.
4. UTILIZE COPPER SLEEVES ON ALL #8 AWG OR SMALLER WIRES.
5. ENSURE ALL BLOW-OFF AND HYDRANT PIPING ARE BONDED AND ELECTRICALLY CONTINUOUS WITH ADJACENT WATER MAIN (IF METALLIC).
6. ALL FITTING BONDS TO METALLIC FITTINGS SHALL HAVE A SINGLE #8 AWG JOINT BOND WIRE ATTACHED.
7. DO NOT BOND ACROSS ANY INSULATING FLANGES, COUPLING, OR UNIONS.

NOMINAL PIPE Ø	WIRE SIZE	# OF WIRES
12" OR LESS	#8	2
13"-36"	#4	2
>36"	#2	3

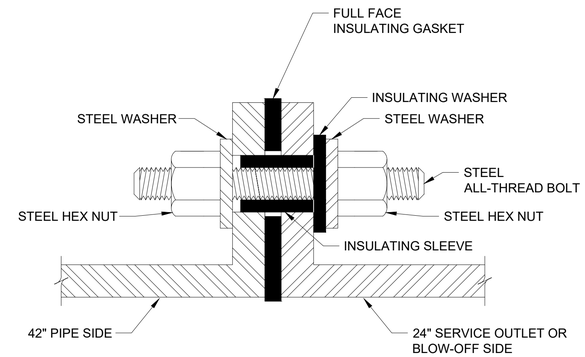

FLANGE ISOLATION KIT DETAIL
(SINGLE WASHER SET FOR
BURIED APPLICATIONS)
NOT TO SCALE
2
DT26

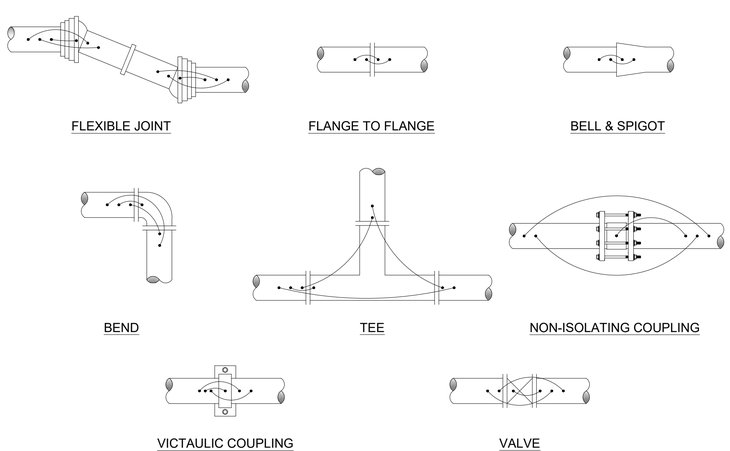

FITTING BONDING DETAILS
NOT TO SCALE
1
DT26

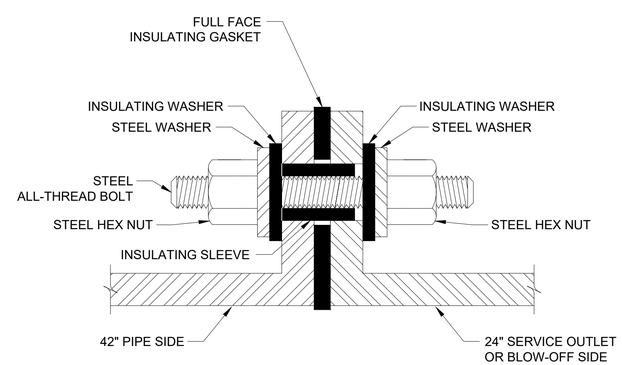

FLANGE ISOLATION KIT DETAIL (DOUBLE
WASHER SET FOR ABOVE GRADE
OR VAULTED APPLICATIONS)
NOT TO SCALE
3
DT26

AECOM

Thornton WATER PROJECT

TWP SEG A, PHASE 1
PROJECT No. 12-777H5

CLIENT

CITY OF THORNTON
12450 WASHINGTON ST,
THORNTON, CO 80241
720.977.6700 tel 000.000.0000 fax
www.thorntonwaterproject.com

CONSULTANT

AECOM
6200 South Quebec Street
Greenwood Village, Colorado 80111
T 303.694.2770 F 303.694.3946
www.aecom.com

SUBCONSULTANT

QUALCORR
3159 Commerce Court
Castle Rock, Colorado 80109
T 303.688.6103 F 303.688.6141
www.QualCorr.com

ISSUE/REVISION

I/R	DATE	DESCRIPTION
C	10/15/2021	ISSUED FOR 95% SUBMITTAL
B	08/16/2021	ISSUED FOR 90% SUBMITTAL
A	09/03/2021	75% SUBMITTAL

VERIFIED SCALES

BAR IS ONE INCH ON ORIGINAL DRAWING
0 1"
IF NOT ONE INCH ON THIS SHEET, ADJUST SCALES ACCORDINGLY

DRAWN BY:	MTJ
CHKD BY:	VWJ
CHKD BY:	CAS
APPD BY:	MMV

PROJECT NUMBER

60619101

SHEET TITLE

CATHODIC PROTECTION CONTINUITY AND ISOLATION DETAILS

SHEET NUMBER

DT26

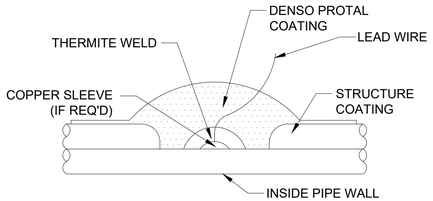

THERMITE WELDING INSTRUCTIONS

1. REMOVE APPROXIMATELY 4" DIAMETER CIRCLE OF PIPELINE COATING AT STRUCTURE CONNECTION LOCATION.
2. CLEAN AREA APPROXIMATELY 2" DIAMETER TO BRIGHT METAL.
3. REMOVE 2" OF INSULATION FROM END OF WIRE.
4. WELD CONDUCTOR TO PIPE. USE APPROPRIATE GRAPHITE MOLD AND CARTRIDGE CHARGE SIZE. COPPER SLEEVES ARE REQUIRED FOR #8 AWG OR SMALLER WIRES.
5. TEST THE THERMITE WELD CONNECTION BY STRIKING THE COMMON SEVERAL BLOWS ON THE SIDE USING A ONE POUND HAMMER. TOP OF WELD MAY BE HAMMERED FLAT IF REQUIRED.
6. APPLY DENSO PROTAL 7125 OR 7200 COATING REPAIR MATERIAL TO ALL EXPOSED METAL AT THERMITE WELD ATTACHMENT SITE PER MANUFACTURER INSTRUCTIONS..

THERMITE WELD DETAIL (1 / DT27)
NOT TO SCALE

NOTE:
DO NOT PLACE REFERENCE ELECTRODE & COUPON IN PIPE BEDDING. INSTALL IN NATIVE SOILS ONLY.

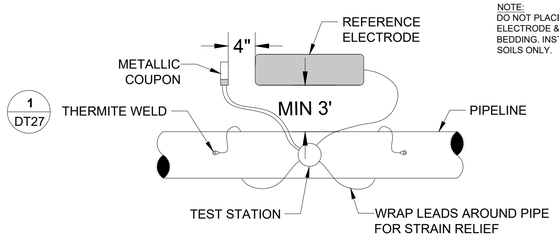

REFERENCE ELECTRODE AND METALLIC COUPON INSTALLATION DETAIL (2 / DT27)
NOT TO SCALE

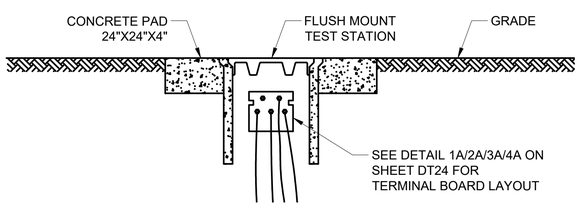

FLUSH MOUNT ALTERNATE (3 / DT27)
NOT TO SCALE

THORNTON WATER PROJECT – SEGMENT A, PHASE 1
168TH AVE. TO QUINCE ST. – PROJECT NO. 12–777H8

PIPELINE	STATION	TEST STATION NO.	DETAIL DRAWING	ALIGNMENT DRAWING	DESCRIPTION	NOTES / COMMENTS
42" WSP	1+93	N/A	1 / DT25	PP01	CP GROUNDBED	
42" WSP	1+93	TWP–01–A.1	1 / DT24	PP01	IR–FREE TEST STATION	CONNECT TO SEG. B – NORTH SIDE OF 168TH AVE.
42" WSP	2+16	TWP–02–A.1	3 / DT24	PP01	TUNNEL/CASING TEST STATION	168TH AVE. BORE NORTH SIDE
42" WSP	3+26	TWP–03–A.1	3 / DT24	PP01	TUNNEL/CASING TEST STATION	168TH AVE. BORE SOUTH SIDE
42" WSP	23+46	TWP–04–A.1	1 / DT24	PP03	IR–FREE TEST STATION	ACCESS ROAD NORTH SIDE
42" WSP	45+34	TWP–05–A.1	3 / DT24	PP05	TUNNEL/CASING TEST STATION	CANAL BORE NORTH SIDE
42" WSP	46+12	TWP–06–A.1	3 / DT24	PP05	TUNNEL/CASING TEST STATION	CANAL BORE SOUTH SIDE
42" WSP	55+00	TWP–07–A.1	1 / DT24	PP06	IR–FREE TEST STATION	INSTALL AT CAV ASSEMBLY
42" WSP	58+94	TWP–08–A.1	3 / DT24	PP06	TUNNEL/CASING TEST STATION	160TH AVE. NORTH SIDE
42" WSP	61+11	TWP–09–A.1	3 / DT24	PP06	TUNNEL/CASING TEST STATION	160TH AVE. SOUTH SIDE
42" WSP	68+15	TWP–10–A.1	1 / DT24	PP07	IR–FREE TEST STATION	INSTALL NEXT TO FIBER OPTIC HANDHOLE
42" WSP	72+33	TWP–11–A.1	1 / DT24	PP07	IR–FREE TEST STATION	INSTALL NEXT TO FIBER OPTIC HANDHOLE
42" WSP	86+82	TWP–12–A.1	1 / DT24	PP09	IR–FREE TEST STATION	INSTALL NEXT TO FIBER OPTIC HANDHOLE
42" WSP	98+11	TWP–13–A.1	3 / DT24	PP10	TUNNEL/CASING TEST STATION	WETLAND CROSSING NORTH SIDE
42" WSP	99+02	TWP–14–A.1	3 / DT24	PP10	TUNNEL/CASING TEST STATION	WETLAND CROSSING SOUTH SIDE
42" WSP	113+83	TWP–15–A.1	1 / DT24	PP11	IR–FREE TEST STATION	152ND AVE. NORTH SIDE
42" WSP	119+11	TWP–16–A.2	3 / DT24	PP12	TUNNEL/CASING TEST STATION	WETLAND CROSSING NORTH SIDE
42" WSP	120+50	TWP–17–A.1	3 / DT24	PP12	TUNNEL/CASING TEST STATION	WETLAND CROSSING SOUTH SIDE
42" WSP	132+00	TWP–18–A.1	1 / DT24	PP13	IR–FREE TEST STATION	INSTALL NEXT TO FIBER OPTIC HANDHOLE
42" WSP	142+00	TWP–19–A.1	1 / DT24	PP14	IR–FREE TEST STATION	INSTALL AT CAV ASSEMBLY
42" WSP	149+65	TWP–20–A.1	2 / DT24	PP15	ISOLATION TEST STATION	INSTALL ISOLATION FLANGE ON 24" BFV IN VAULT. SEE DT16
42" WSP	152+19	TWP–21–A.1	3 / DT24	PP15	TUNNEL/CASING TEST STATION	E–470 BORE NORTH SIDE
42" WSP	160+56	TWP–22–A.1	3 / DT24	PP16	TUNNEL/CASING TEST STATION	E–470 BORE SOUTH SIDE
42" WSP	170+00	TWP–23–A.1	2 / DT24	PP17	ISOLATION TEST STATION	INSTALL ISOLATION FLANGE ON 24" BFV IN VAULT. SEE DT16
42" WSP	174+62	TWP–24–A.1	3 / DT24	PP17	TUNNEL/CASING TEST STATION	DRAINAGE CROSSING NORTH SIDE
42" WSP	175+60	TWP–25–A.1	3 / DT24	PP17	TUNNEL/CASING TEST STATION	DRAINAGE CROSSING SOUTH SIDE
42" WSP	189+75	TWP–26–A.1	1 / DT24	PP19	IR–FREE TEST STATION	INSTALL AT ACCESS MANWAY
42" WSP	199+81	TWP–27–A.1	1 / DT24	PP20	IR–FREE TEST STATION	INSTALL AT CAV ASSEMBLY
42" WSP	212+68	TWP–28–A.1	1 / DT24	PP21	IR–FREE TEST STATION	INSTALL NEXT TO FIBER OPTIC HANDHOLE
42" WSP	229+09	TWP–29–A.1	3 / DT24	PP23	TUNNEL/CASING TEST STATION	136TH AVE. NORTH SIDE
42" WSP	231+00	TWP–30–A.1	3 / DT24	PP23	TUNNEL/CASING TEST STATION	136TH AVE SOUTH SIDE
42" WSP	246+50	TWP–31–A.1	1 / DT24	PP25	IR–FREE TEST STATION	INSTALL AT ACCESS MANWAY
42" WSP	264+09	TWP–32–A.1	3 / DT24	PP26	TUNNEL/CASING TEST STATION	WETLAND CROSSING NORTH SIDE
42" WSP	265+19	TWP–33–A.1	3 / DT24	PP26	TUNNEL/CASING TEST STATION	WETLAND CROSSING SOUTH SIDE
42" WSP	283+60	TWP–34–A.1	3 / DT24	PP01	TUNNEL/CASING TEST STATION	128TH AVE NORTH SIDE (BY OTHERS AS PART OF THE EARLY WORKS PACKAGE)
42" WSP	285+54	TWP–35–A.1	3 / DT24	PP01	TUNNEL/CASING TEST STATION	128TH AVE. SOUTH SIDE (BY OTHERS AS PART OF THE EARLY WORKS PACKAGE)
42" WSP	298+50	TWP–36–A.1	1 / DT24	PP02	IR–FREE TEST STATION	EDGE OF QUEBEC ST. (BY OTHERS AS PART OF THE EARLY WORKS PACKAGE)
42" WSP	307+55	TWP–37–A.1	2 / DT24	PP03	ANODE TEST STATION	EDGE OF QUEBEC ST. (BY OTHERS AS PART OF THE EARLY WORKS PACKAGE)
42" WSP	311+44	TWP–38–A.1	3 / DT24	PP32	TUNNEL/CASING TEST STATION	WETLAND CROSSING NORTH SIDE
42" WSP	311+86	TWP–39–A.1	3 / DT24	PP32	TUNNEL/CASING TEST STATION	WETLAND CROSSING SOUTH SIDE
42" WSP	332+00	TWP–40–A.1	1 / DT24	PP34	IR–FREE TEST STATION	INSTALL DOWNSTREAM OF CAV ASSEMBLY
42" WSP	346+66	TWP–41–A.1	3 / DT24	PP35	TUNNEL/CASING TEST STATION	120TH AVE. NORTH SIDE
42" WSP	348+43	TWP–42–A.1	3 / DT24	PP35	TUNNEL/CASING TEST STATION	120TH AVE. SOUTH SIDE

AECOM

Thornton WATER PROJECT

TWP SEG A, PHASE 1
PROJECT No. 12-777H5

CLIENT

CITY OF THORNTON
12450 WASHINGTON ST,
THORNTON, CO 80241
720.977.6700 tel 000.000.0000 fax
www.thorntonwaterproject.com

CONSULTANT

AECOM
6200 South Quebec Street
Greenwood Village, Colorado 80111
T 303.694.2770 F 303.694.3946
www.aecom.com

SUBCONSULTANT

QUALCORR
3159 Commerce Court
Castle Rock, Colorado 80109
T 303.688.6103 F 303.688.6141
www.QualCorr.com

ISSUE/REVISION

I/R	DATE	DESCRIPTION
C	10/15/2021	ISSUED FOR 95% SUBMITTAL
B	08/16/2021	ISSUED FOR 90% SUBMITTAL
A	09/03/2021	75% SUBMITTAL

VERIFIED SCALES

BAR IS ONE INCH ON ORIGINAL DRAWING
0 1"
IF NOT ONE INCH ON THIS SHEET, ADJUST SCALES ACCORDINGLY

DRAWN BY: MTJ
CHKD BY: VWJ
CHKD BY: CAS
APPD BY: MMV

PROJECT NUMBER

60619101

SHEET TITLE

CATHODIC PROTECTION STANDARD DETAILS AND TEST STATION SCHEDULE

SHEET NUMBER

DT27

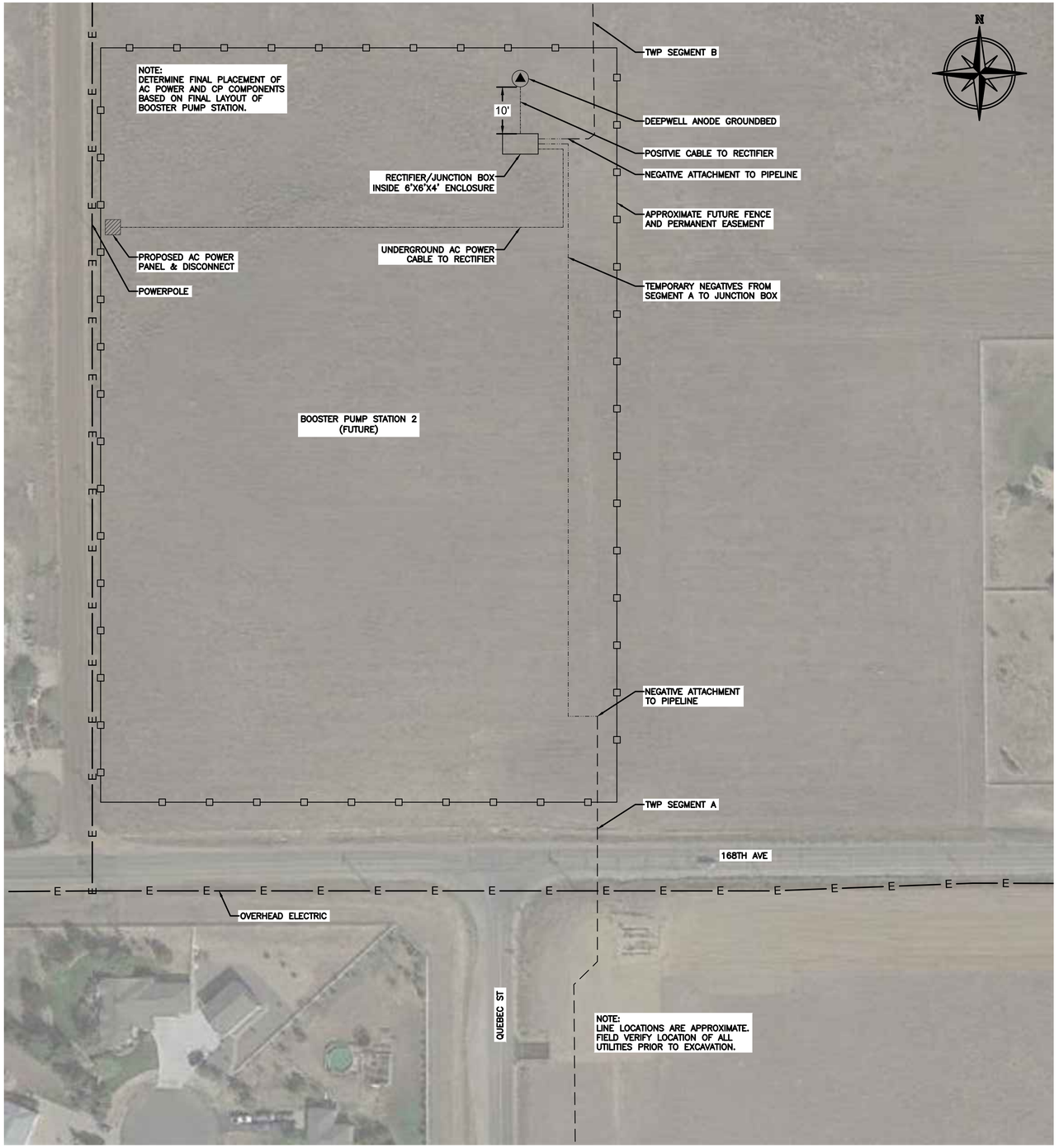

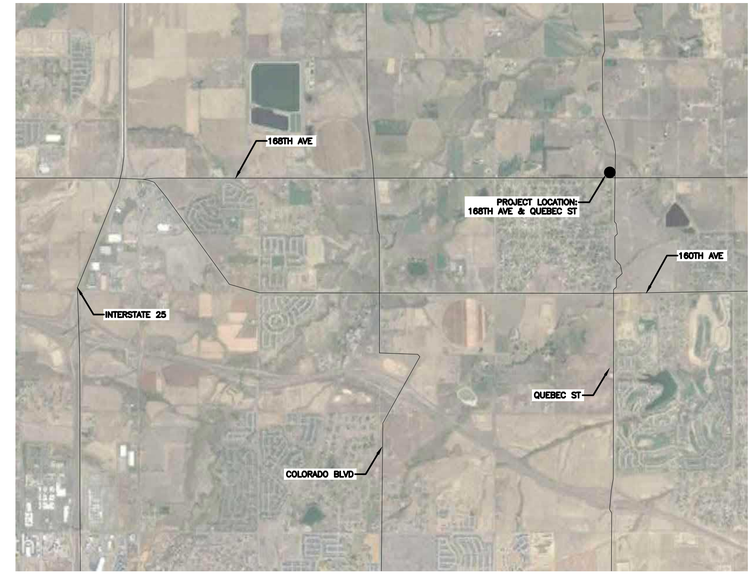

SITE GPS COORDINATES:
LATITUDE: 40.000765
LONGITUDE: -104.904205

GENERAL NOTES:

1. CONTRACTOR TO COMPLETE ALL 'ONE-CALL' NOTIFICATIONS AT LEAST THREE BUSINESS DAYS BEFORE ANY EXCAVATION BY CALLING COLORADO 811 OR IF CALLING FROM OUT OF STATE, (303) 205-6314.
2. CONTRACTOR AND COMPANY REPRESENTATIVE TO FIELD VERIFY LOCATION OF BURIED UTILITIES, PIPING, CABLES, AND OTHER APPURTENANCES PRIOR TO EXCAVATION AND FINAL LOCATION OF CP COMPONENTS TO BE APPROVED BY COMPANY REPRESENTATIVE.
3. ALL AC POWER REQUIREMENTS TO BE COORDINATED AND PROVIDED BY CONTRACTOR.
4. THE CONTRACTOR SHALL EXERCISE EXTREME CAUTION DURING CONSTRUCTION WORK IN ORDER NOT TO DISRUPT EXISTING UTILITY SERVICES.
5. INTERRUPTION OF EXISTING UTILITY SERVICES AS A RESULT OF THE CONSTRUCTION WORK SHALL BE REQUESTED IN WRITING TO THE APPROPRIATE AGENCIES AND SECURE A WRITTEN PERMIT(S) TO THE DESIRED DATE OF INTERRUPTION.
6. ALL BELOW GRADE ELECTRICAL CABLES SHALL BE BURIED A MINIMUM OF 24 INCHES. ALL CABLES SHALL BE INSTALLED IN COATED RIGID CONDUIT SUCH AS O-CAL OR EQUIVALENT.
7. REFERENCE SHEET DT21 FOR RECTIFIER AND ANODE GROUNDBED INSTALLATION DETAILS.
8. OWNER SHALL COORDINATE AND OBTAIN THE NECESSARY CLEARANCES FROM RELEVANT LAND OWNERS AND MANAGEMENT AGENCIES.
9. CONTRACTOR IS RESPONSIBLE FOR THE REMOVAL OF SILT AND DEBRIS AS A RESULT OF CONSTRUCTION.
10. RESTORE AND RECLAIM SITE TO ORIGINAL CONDITION AS PER PROJECT SPECIFICATIONS.

AECOM

Thornton WATER PROJECT

TWP SEG A, PHASE 1
PROJECT No. 12-777H5

CLIENT

CITY OF THORNTON
12450 WASHINGTON ST,
THORNTON, CO 80241
720.977.6700 tel 000.000.0000 fax
www.thorntonwaterproject.com

CONSULTANT

AECOM
6200 South Quebec Street
Greenwood Village, Colorado 80111
T 303.694.2770 F 303.694.3946
www.aecom.com

SUBCONSULTANT

QUALCORR
3159 Commerce Court
Castle Rock, Colorado 80109
T 303.688.6103 F 303.688.6141
www.QualCorr.com

ISSUE/REVISION

I/R	DATE	DESCRIPTION
C	10/15/2021	ISSUED FOR 95% SUBMITTAL
B	08/16/2021	ISSUED FOR 90% SUBMITTAL
A	09/03/2021	75% SUBMITTAL

VERIFIED SCALES

BAR IS ONE INCH ON ORIGINAL DRAWING
0 1"
IF NOT ONE INCH ON THIS SHEET, ADJUST SCALES ACCORDINGLY

DRAWN BY:	MTJ
CHKD BY:	VWJ
CHKD BY:	CAS
APPD BY:	MMV

PROJECT NUMBER

60619101

SHEET TITLE

CATHODIC PROTECTION SITE PLAN

SHEET NUMBER

DT28

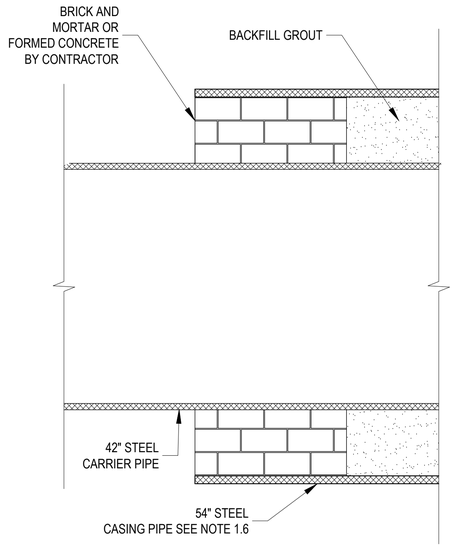

D3 -- CASING END SEAL
SCALE: NTS

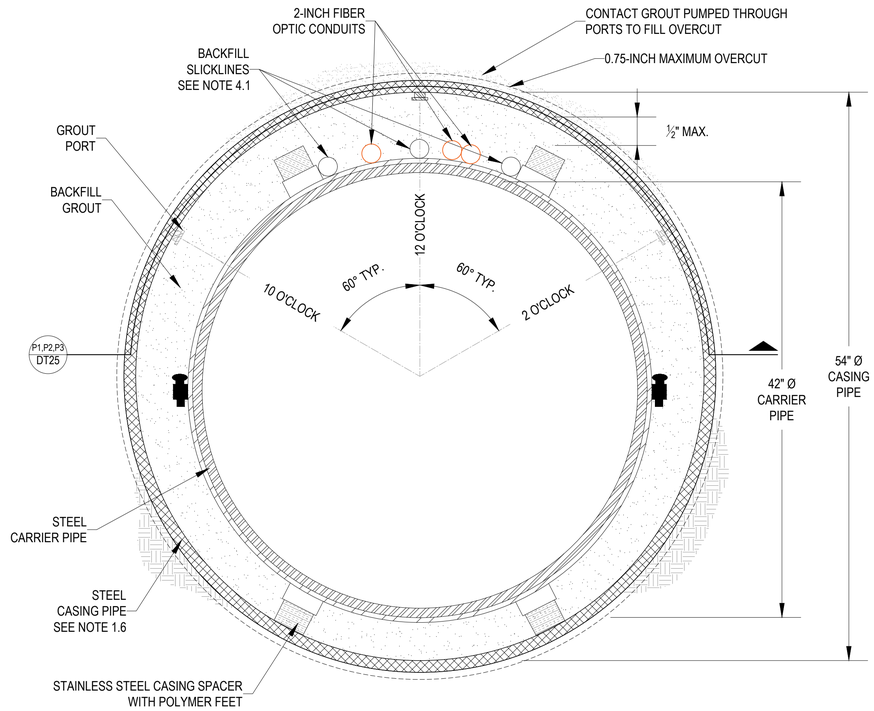

S1 DT25 42" CARRIER AND 54" CASING PIPE CROSS SECTION
SCALE: NTS

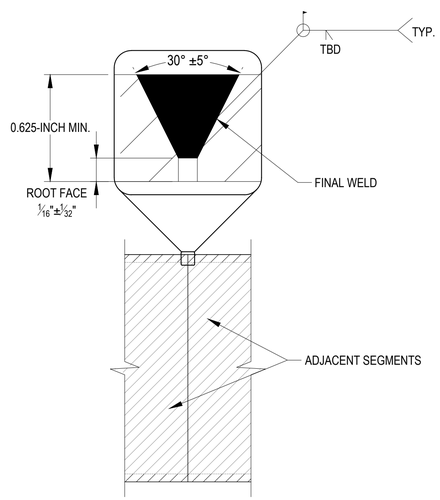

D1 -- WELDED JOINT DETAIL
SCALE: NTS

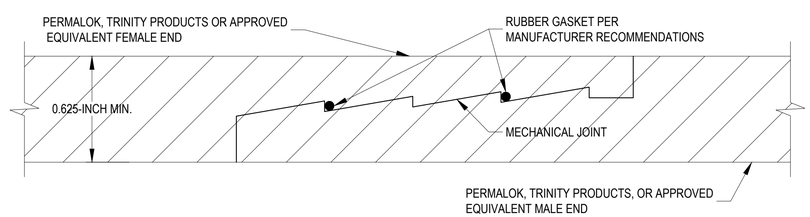

D2 -- MECHANICAL JOINT DETAIL
SCALE: NTS

GENERAL NOTES:

1. CASING AND CARRIER PIPE
   - 1.1. SPECIFICATION SECTION 31 71 00 TUNNEL EXCAVATION AND INITIAL SUPPORT PROVIDE THE ACCEPTABLE TUNNELING TECHNIQUES, THE MINIMUM SPECIFIED CASING PIPE THICKNESS, AND THE CASING PIPE INSTALLATION TOLERANCES.
   - 1.2. ALL 42-INCH STEEL CARRIER PIPES PIPES SHALL BE HOUSED BY A STEEL CASING PIPE WITH A MINIMUM DIAMETER OF 54-INCHES AS INDICATED ON THE PLAN AND PROFILE DRAWINGS.
   - 1.3. EACH SECTION OF CARRIER PIPE WITHIN THE CASING SHALL HAVE CASING SPACERS INSTALLED AT A MAXIMUM SPACING OF 10-FEET ON CENTER.
   - 1.4. CASING SPACERS SHALL BE STAINLESS STEEL WITH POLYMER FEET.
   - 1.5. THE CONTRACTOR SHALL ADDITIONALLY INSTALL THREE 2-INCH DIAMETER PVC CONDUITS FOR FUTURE FIBER OPTIC UTILITY.
   - 1.6. STEEL CASING PIPE IS ONLY SHOWN FOR CLARITY OF THE TUNNEL DETAILS. OTHER METHODS OF INITIAL SUPPORT ARE ACCEPTABLE FOR USE WITHIN THE LIMITATIONS AND REQUIREMENTS OF THE PROJECT SPECIFICATIONS. ALL METHODS OF INITIAL SUPPORT SHALL CONTAIN CONTACT AND BACKFILL GROUT IN ACCORDANCE WITH PROJECT SPECIFICATIONS.
2. CASING JOINT GENERAL NOTES (STEEL CASING):
   - 2.1. STEEL CASING SEGMENTS SHALL EITHER BE WELDED TOGETHER OR UTILIZE A MECHANICAL JOINT AS INDICTED IN THE JOINT DETAILS AND SPECIFICATIONS.
   - 2.2. WELDED JOINTS SHALL UTILIZE BEVELED ENDS. WELDED JOINTS SHALL BE FULLY PENETRATING. AS SHOWN IN DETAIL D1.
   - 2.3. CASING JOINTS SHALL RESIST TEMPORARY INSTALLATION JACKING LOADS.
   - 2.4. MECHANICAL JOINTS SHALL BE PR PERMALOK FOR PIPE RAMMING OR T7 PERMALOK OR TRI-LOC TL-MT HYDRO TRINITY PRODUCTS FOR JACKED INSTALLATIONS OR APPROVED EQUIVALENT AS SHOWN IN DETAIL D2.
3. CONTACT GROUT
   - 3.1. ALL CASING INSTALLATIONS SHALL HAVE GROUT PORTS INSTALLED AND CONTACT GROUT PUMPED INTO OVERCUT ANNULAR SPACE IN ACCORDANCE WITH PROJECT SPECIFICATIONS.
   - 3.2. ALL GROUT PORTS SHALL BE EQUIPPED WITH A PRESSURE GAUGE TO MONITOR GROUTING PRESSURES DURING CONTACT GROUT PUMPING.
   - 3.3. CONTACT GROUT UNIT WEIGHTS AND STRENGTH ARE PROVIDED IN THE SPECIFICATIONS.
4. BACKFILL GROUT
   - 4.1. SLICKLINES PRESENTED ON SHEETS DT24 AND DT25 ARE NOT THE ONLY APPROVED MEANS AND METHOD OF BACKFILL GROUTING THE ANNULUS. THE SLICKLINES PRESENTED ARE ONLY MEANT TO ILLUSTRATE INDUSTRY STANDARD FOR BACKFILLING THE ANNULUS. BACKFILL GROUTING MEANS AND METHODS SHALL BE APPROVED BY THE ENGINEER PER THE SPECIFICATIONS.
5. END SEAL GENERAL NOTES:
   - 5.1. CASING PIPE ENDS SHALL BE SEALED WITH BRICK AND MORTAR OR APPROVED EQUIVALENT AS GENERALLY SHOWN IN DETAIL D3. END SEALS SHALL PREVENT INFLOW OF SOIL AND/OR WATER INTO THE ANNULAR SPACE.

RESPONSES TO GEOTECHNICAL COMMENTS FROM THE INTERIM 90% SUBMITTAL AND ANY REVISIONS BASED ON THE RJH GEOTECHNICAL REVIEW WILL BE INCORPORATED INTO THE FINAL SUBMITTAL

NOT FOR CONSTRUCTION - 95%

LITHOS ENGINEERING

Thornton WATER PROJECT

TWP SEGMENT A,
PROJECT No. 12-777H5

CLIENT

CITY OF THORNTON
12450 WASHINGTON ST,
THORNTON, CO 80241
720.977.6700 tel 000.000.0000 fax
www.thorntonwaterproject.com

CONSULTANT

LITHOS ENGINEERING
2750 S WADSWORTH BLVD, SUITE D-200
DENVER, COLORADO 80227
T 303.625.9502
WWW.LITHOSENG.COM

ISSUE/REVISION

I/R	DATE	DESCRIPTION
B	09/25/2020	35% FINAL SUBMITTAL
A	04/21/2020	35% SUBMITTAL

VERIFIED SCALES

SCALE: NTS

BAR IS ONE INCH ON ORIGINAL DRAWING
0 1"
IF NOT ONE INCH ON THIS SHEET, ADJUST SCALES ACCORDINGLY

DRAWN BY:	DF
CHKD BY:	DF
CHKD BY:	LH
APPD BY:	NS

PROJECT NUMBER
60619101

SHEET TITLE
TUNNEL DETAILS 1

SHEET NUMBER
DT27 OF 83

Z:\Shared\S-Drive\Projects\19049 Thornton RWL - Thornton Reach\Design\Dwgs\Tunnel Details.dwg

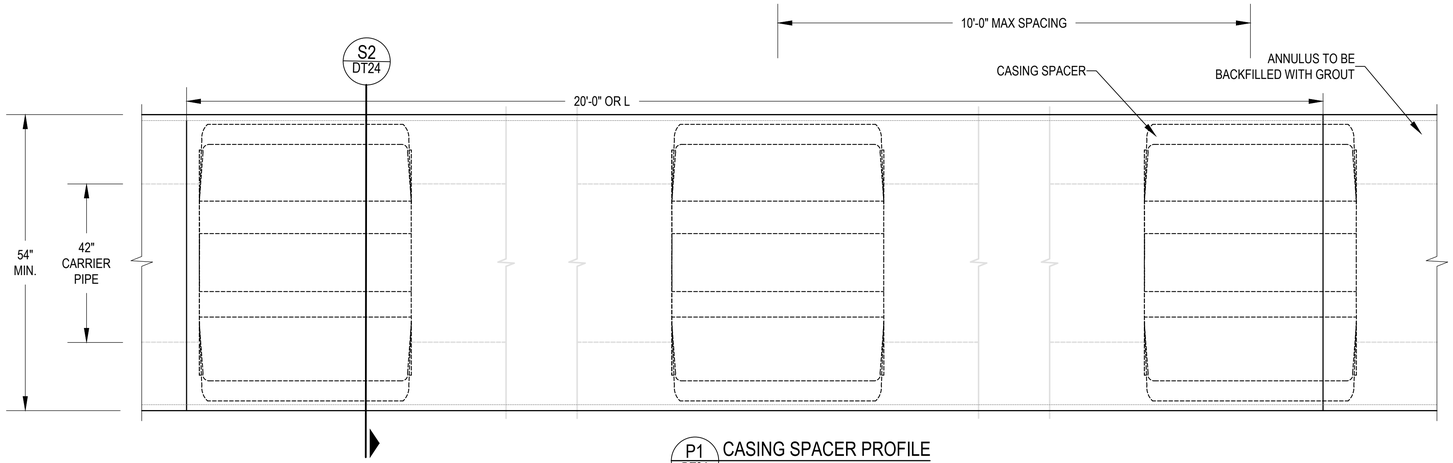

P1 DT24 CASING SPACER PROFILE
SCALE: NTS

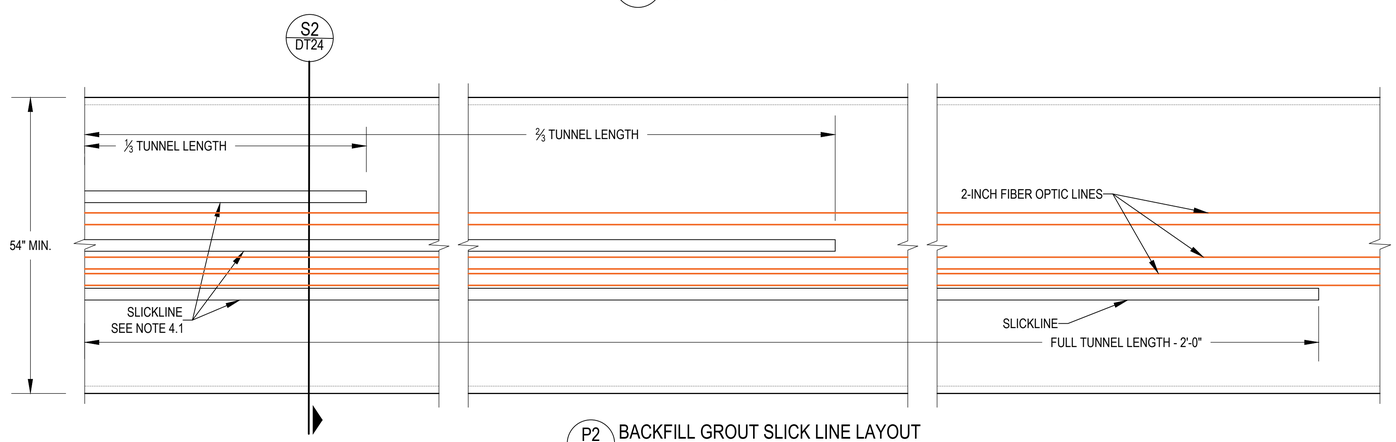

P2 DT24 BACKFILL GROUT SLICK LINE LAYOUT
SCALE: NTS

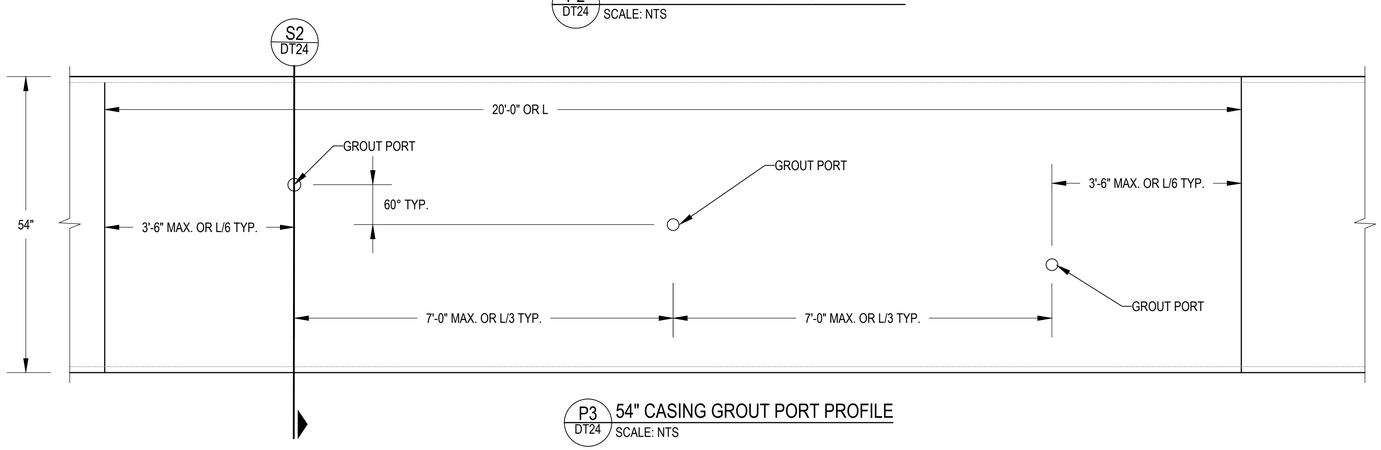

P3 DT24 54" CASING GROUT PORT PROFILE
SCALE: NTS

GENERAL NOTES:

1. CASING AND CARRIER PIPE

1.1. SPECIFICATION SECTION 31 71 00 TUNNEL EXCAVATION AND INITIAL SUPPORT PROVIDE THE ACCEPTABLE TUNNELING TECHNIQUES, THE MINIMUM SPECIFIED CASING PIPE THICKNESS, AND THE CASING PIPE INSTALLATION TOLERANCES.

1.2. ALL 42-INCH STEEL CARRIER PIPES PIPES SHALL BE HOUSED BY A STEEL CASING PIPE WITH A MINIMUM DIAMETER OF 54-INCHES AS INDICATED ON THE PLAN AND PROFILE DRAWINGS.

1.3. EACH SECTION OF CARRIER PIPE WITHIN THE CASING SHALL HAVE CASING SPACERS INSTALLED AT A MAXIMUM SPACING OF 10-FEET ON CENTER.

1.4. CASING SPACERS SHALL BE STAINLESS STEEL WITH POLYMER FEET.

1.5. THE CONTRACTOR SHALL ADDITIONALLY INSTALL THREE 2-INCH DIAMETER PVC CONDUITS FOR FUTURE FIBER OPTIC UTILITY.

1.6. STEEL CASING PIPE IS ONLY SHOWN FOR CLARITY OF THE TUNNEL DETAILS. OTHER METHODS OF INITIAL SUPPORT ARE ACCEPTABLE FOR USE WITHIN THE LIMITATIONS AND REQUIREMENTS OF THE PROJECT SPECIFICATIONS. ALL METHODS OF INITIAL SUPPORT SHALL CONTAIN CONTACT AND BACKFILL GROUT IN ACCORDANCE WITH PROJECT SPECIFICATIONS.

2. CASING JOINT GENERAL NOTES (STEEL CASING):

2.1. STEEL CASING SEGMENTS SHALL EITHER BE WELDED TOGETHER OR UTILIZE A MECHANICAL JOINT AS INDICTED IN THE JOINT DETAILS AND SPECIFICATIONS.

2.2. WELDED JOINTS SHALL UTILIZE BEVELED ENDS. WELDED JOINTS SHALL BE FULLY PENETRATING. AS SHOWN IN DETAIL D1.

2.3. CASING JOINTS SHALL RESIST TEMPORARY INSTALLATION JACKING LOADS.

2.4. MECHANICAL JOINTS SHALL BE PR PERMALOK FOR PIPE RAMMING OR T7 PERMALOK OR TRI-LOC TL-MT HYDRO TRINITY PRODUCTS FOR JACKED INSTALLATIONS OR APPROVED EQUIVALENT AS SHOWN IN DETAIL D2.

3. CONTACT GROUT

3.1. ALL CASING INSTALLATIONS SHALL HAVE GROUT PORTS INSTALLED AND CONTACT GROUT PUMPED INTO OVERCUT ANNULAR SPACE IN ACCORDANCE WITH PROJECT SPECIFICATIONS.

3.2. ALL GROUT PORTS SHALL BE EQUIPPED WITH A PRESSURE GAUGE TO MONITOR GROUTING PRESSURES DURING CONTACT GROUT PUMPING.

3.3. CONTACT GROUT UNIT WEIGHTS AND STRENGTH ARE PROVIDED IN THE SPECIFICATIONS.

4. BACKFILL GROUT

4.1. SLICKLINES PRESENTED ON SHEETS DT24 AND DT25 ARE NOT THE ONLY APPROVED MEANS AND METHOD OF BACKFILL GROUTING THE ANNULUS. THE SLICKLINES PRESENTED ARE ONLY MEANT TO ILLUSTRATE INDUSTRY STANDARD FOR BACKFILLING THE ANNULUS. BACKFILL GROUTING MEANS AND METHODS SHALL BE APPROVED BY THE ENGINEER PER THE SPECIFICATIONS.

5. END SEAL GENERAL NOTES:

5.1. CASING PIPE ENDS SHALL BE SEALED WITH BRICK AND MORTAR OR APPROVED EQUIVALENT AS GENERALLY SHOWN IN DETAIL D3. END SEALS SHALL PREVENT INFLOW OF SOIL AND/OR WATER INTO THE ANNULAR SPACE.

RESPONSES TO GEOTECHNICAL COMMENTS FROM THE INTERIM 90% SUBMITTAL AND ANY REVISIONS BASED ON THE RJH GEOTECHNICAL REVIEW WILL BE INCORPORATED INTO THE FINAL SUBMITTAL

NOT FOR CONSTRUCTION - 95%

LITHOS ENGINEERING

Thornton WATER PROJECT

TWP SEGMENT A,
PROJECT No. 12-777H5

CLIENT

CITY OF THORNTON
12450 WASHINGTON ST,
THORNTON, CO 80241
720.977.6700 tel 000.000.0000 fax
www.thorntonwaterproject.com

CONSULTANT

LITHOS ENGINEERING
2750 S WADSWORTH BLVD, SUITE D-200
DENVER, COLORADO 80227
T 303.625.9502
WWW.LITHOSENG.COM

ISSUE/REVISION

I/R	DATE	DESCRIPTION
B	09/25/2020	35% FINAL SUBMITTAL
A	04/21/2020	35% SUBMITTAL

VERIFIED SCALES

SCALE: NTS

BAR IS ONE INCH ON ORIGINAL DRAWING
0 1"
IF NOT ONE INCH ON THIS SHEET, ADJUST SCALES ACCORDINGLY

DRAWN BY:	DF
CHKD BY:	DF
CHKD BY:	LH
APPD BY:	NS

PROJECT NUMBER
60619101

SHEET TITLE
TUNNEL DETAILS 2

SHEET NUMBER
DT28 OF 83

Z:\Shared\S-Drive\Projects\19049 Thornton RWL - Thornton Reach\Design\Dwgs\Tunnel Details.dwg

GENERAL NOTES:

1. SHAFT SUPPORT IS SHOWN FOR INFORMATIONAL PURPOSES ONLY. ALL SHAFT SUPPORT STRUCTURAL COMPONENTS, GEOMETRIES, AND DIMENSIONS SHALL BE DESIGNED BY THE CONTRACTOR'S ENGINEER AS REQUIRED BY SECTION 31 70 00.
2. SHAFT SUPPORT OPTIONS SHOWN ARE NOT EXCLUSIVE. SHAFT SUPPORT MEANS AND METHODS SHALL BE IN ACCORDANCE WITH PROJECT SPECIFICATIONS AND APPROVED BY THE OWNER'S ENGINEER.
3. THE INCLUDED CONCEPTS ARE MOST APPLICABLE TO SHAFT EXCAVATION EXCEEDING 20 FEET IN DEPTH. LESS ROBUST SUPPORT SUCH AS TRENCH BOXES ARE ACCEPTABLE FOR SHALLOWER SHAFTS.

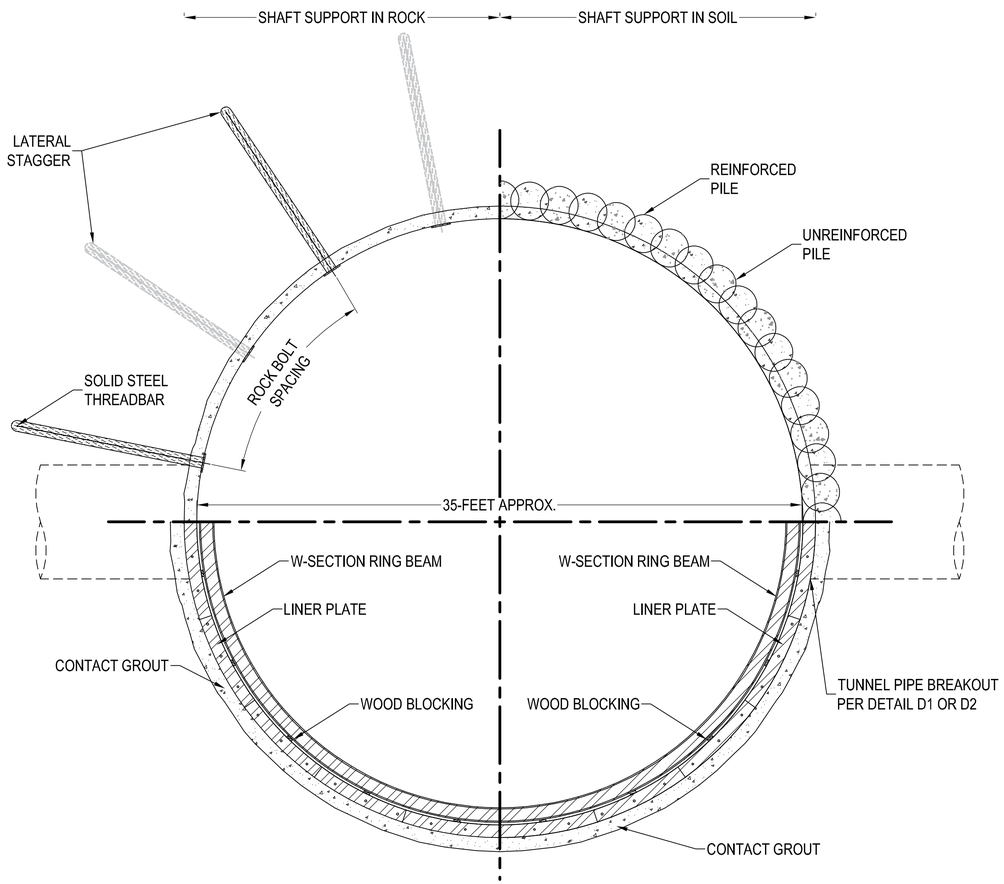

P1 -- SHAFT SUPPORT PLAN
SCALE: NOT TO SCALE

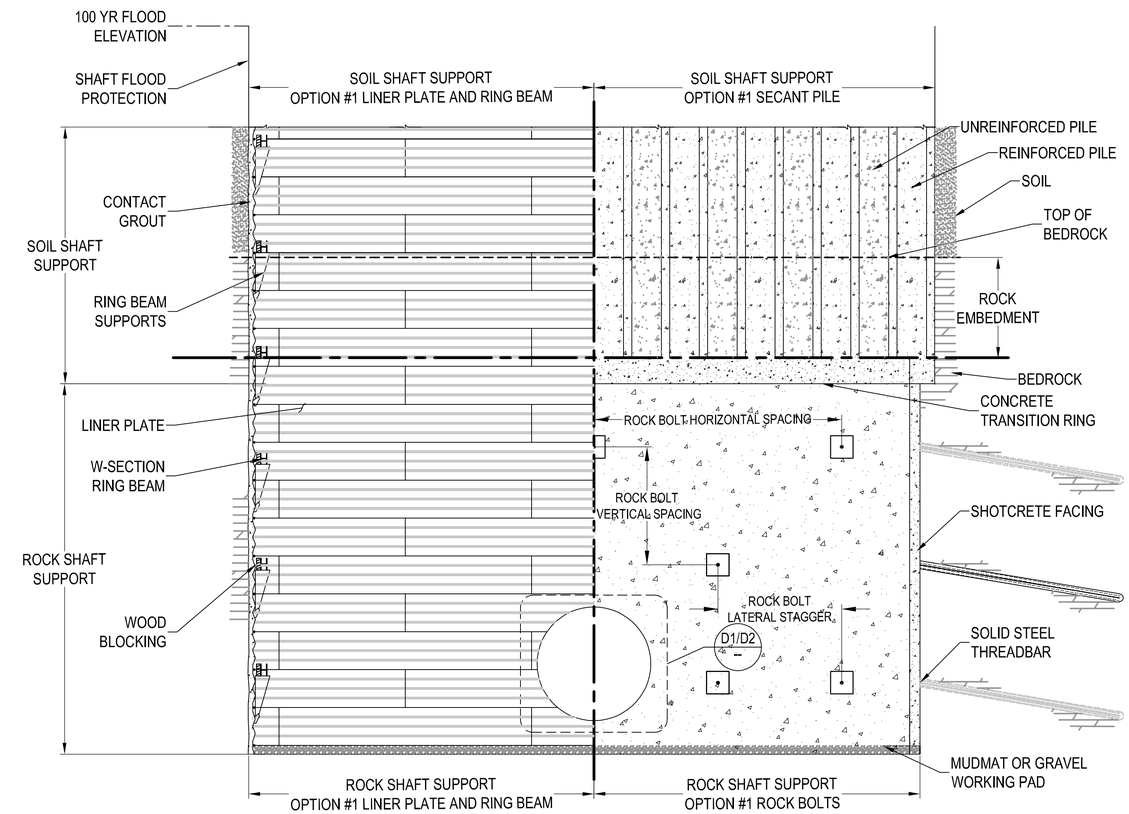

E1 -- SHAFT SUPPORT ELEVATION
SCALE: NOT TO SCALE

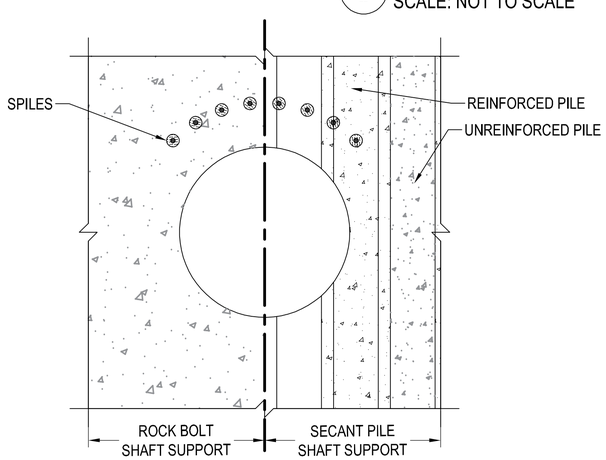

D1 -- ROCK BOLT AND SECANT PILE TUNNEL BREAKOUT SUPPORT
SCALE: NOT TO SCALE

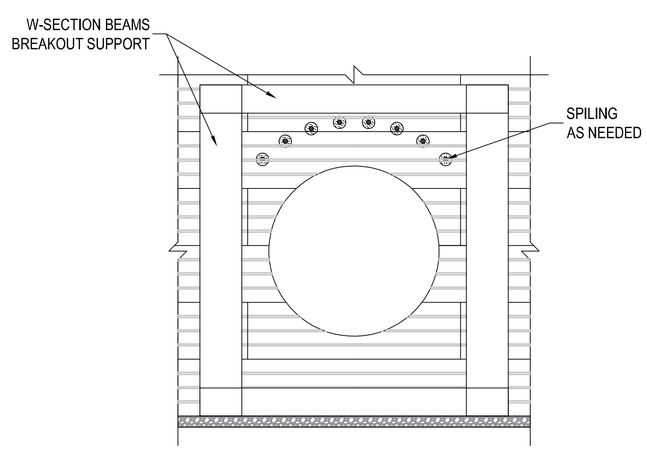

D2 -- LINER PLATE AND RING BEAM TUNNEL BREAKOUT SUPPORT
SCALE: NOT TO SCALE

RESPONSES TO GEOTECHNICAL COMMENTS FROM THE INTERIM 90% SUBMITTAL AND ANY REVISIONS BASED ON THE RJH GEOTECHNICAL REVIEW WILL BE INCORPORATED INTO THE FINAL SUBMITTAL

NOT FOR CONSTRUCTION - 95%

LITHOS ENGINEERING

Thornton WATER PROJECT

TWP SEGMENT A, PROJECT No. 12-777H5

CLIENT

CITY OF THORNTON
12450 WASHINGTON ST,
THORNTON, CO 80241
720.977.6700 tel 000.000.0000 fax
www.thorntonwaterproject.com

CONSULTANT

LITHOS ENGINEERING
2750 S WADSWORTH BLVD, SUITE D-200
DENVER, COLORADO 80227
T 303.625.9502
WWW.LITHOSENG.COM

ISSUE/REVISION

I/R	DATE	DESCRIPTION
B	09/25/2020	35% FINAL SUBMITTAL
A	04/21/2020	35% SUBMITTAL

VERIFIED SCALES

SCALE: NOT TO SCALE

BAR IS ONE INCH ON ORIGINAL DRAWING
0 1"
IF NOT ONE INCH ON THIS SHEET, ADJUST SCALES ACCORDINGLY

DRAWN BY:	DF
CHKD BY:	DF
CHKD BY:	LH
APPD BY:	NS

PROJECT NUMBER
60619101

SHEET TITLE
SHAFT DETAILS

SHEET NUMBER
DT28 OF 83

Z:\Shared\S-Drive\Projects\19049 Thornton RWL - Thornton Reach\Design\Dwgs\Shaft Details.dwg

BORING: TB-100

Project Name: TWP, Thornton Reach, Ph. 1
Project Number: 19049
Client's Name: AECOM
Owner's Name: City of Thornton
Drilling Subcontractor: Authentic Drilling
Lithos Representative: M. Smith
Date(s) of Drilling: 01/12/21

Drilling and Sampling Methods

Drill Make and Model: CME 750
Drilling Method: Hollow Stem Auger (HSA)
Bit Type: Cutting Head
Casing Description: HSA
Hammer Weight (lbs)/Fall (in): 140/30
Sampler Type(s): Mod. Cal.
Sampler Diameter(s): 2.0 inches

LITHOS ENGINEERING

Boring Location: 100'NE of Quebec and 168th
Boring Elevation: 5126.0 feet
Notes: Elevation estimated from AECOM plan and profile drawings.

Sampling Data | Visual Material Description | Laboratory Testing Results (In-Situ States; INDEX DATA; Strength & Compressibility)

Soil:
-GEOLOGIC INTERPRETATION-
USCS Classification (group symbol), particle sizes, density or consistency, color, moisture, other descriptions

Rock:
-GEOLOGIC INTERPRETATION-
Bedrock Classification, hardness, weather, color, texture, joint size, other descriptions

Depth (ft)	Elevation (ft)	Sample Identification	Blow Count/6 in	Recovery (in) / RQD (%)	Drilling Rate (min./ft.)	Visual Material Description	Moisture Content (%)	Dry Unit Weight (pcf)	Water Soluble Sulfates (%)	Gravel Content (%)	Sand Content (%)	Fines Content (%)	Liquid Limit (%)	Plasticity Index (%)	UCS (psf)	Swell Pressure (psf)	Swell Percent (%)
	5125					**COARSE ALLUVIUM**											
5	5120		9 12	4.5		Clayey SAND (SC), mostly fine sand, some clay, medium dense, brown, dry, medium plasticity.	12	121				43					
10	5115		7 10	5		As above except mostly fine to medium sand, yellowish brown.	9	112			0	62	38				
			8 13	6		11.5 ft. **FINE ALLUVIUM** Sandy SILT (ML), some fine sand, very stiff, yellowish brown, dry to moist.	11	88						NV	NP		
15	5110		10 17	6		14.0 ft. **DENVER FORMATION** Claystone, soft, moderately weathered, gray to greenish gray, little fine to medium sand, discontinuities along bedding plane, some iron oxidation.	20	108									
			15 26	6		As above except slightly weathered, gray, trace to few fine sand, few iron oxidation.											
20	5105		18 39	6		As above except slightly weathered, gray to yellowish brown, trace fine sand, trace iron oxidation, few lignite.	17	115							24,963		
25	5100		14 32	7.5		As above except slightly weathered, gray to yellowish brown, trace fine sand, trace iron oxidation.											
30	5095		30 50/5"	7.5		As above except medium, fresh. 30.0 ft. **END OF EXPLORATION**											

Groundwater Depth / Monitoring Well Configuration | Geologic Graphic

General Notes:
1) Soil classifications are in general accordance with ASTM D2487 Standard Practice for Classification of Soils for Engineering Purposes (Unified Soil Classification System)
2) The maximum particle size identified in the material description is dependent on sampler dimensions.
3) Additional information is provided on the Boring Log Key.

Groundwater Data:

Date:	Elapsed Time:	Depth to Groundwater:
01/19/21	7 days	DNE
06/21/21	160 days	DNE
07/19/21	188 days	DNE

BORING: TB-200

Project Name: TWP, Thornton Reach, Ph. 1
Project Number: 19049
Client's Name: AECOM
Owner's Name: City of Thornton
Drilling Subcontractor: Authentic Drilling
Lithos Representative: A. Wilkes
Date(s) of Drilling: 03/01/21

Drilling and Sampling Methods

Drill Make and Model: CME Buggy Rig
Drilling Method: Hollow Stem Auger (HSA)
Bit Type: Cutting Head
Casing Description: HSA
Hammer Weight (lbs)/Fall (in): 140/30
Sampler Type(s): Mod. Cal.
Sampler Diameter(s): 2.0 inches

LITHOS ENGINEERING

Boring Location: 115'SE of Quebec and 168th
Boring Elevation: 5130.0 feet
Notes: Elevation estimated from AECOM plan and profile drawings.

Sampling Data | Visual Material Description | Laboratory Testing Results (In-Situ States; INDEX DATA; Strength & Compressibility)

Soil:
-GEOLOGIC INTERPRETATION-
USCS Classification (group symbol), particle sizes, density or consistency, color, moisture, other descriptions

Rock:
-GEOLOGIC INTERPRETATION-
Bedrock Classification, hardness, weather, color, texture, joint size, other descriptions

Depth (ft)	Elevation (ft)	Sample Identification	Blow Count/6 in	Recovery (in) / RQD (%)	Drilling Rate (min./ft.)	Visual Material Description	Moisture Content (%)	Dry Unit Weight (pcf)	Water Soluble Sulfates (%)	Gravel Content (%)	Sand Content (%)	Fines Content (%)	Liquid Limit (%)	Plasticity Index (%)	UCS (psf)	Swell Pressure (psf)	Swell Percent (%)
	5125					**FINE ALLUVIUM** Sandy LEAN CLAY (CL), some fine sand, brown, dry.											
5	5120		2 2	3		As above except soft, moist, low plasticity.	10	100									
						10.0 ft. **COARSE ALLUVIUM** Clayey SAND (SC), mostly fine sand, little clay, soft, moist, low plasticity.	11	112				46	42	18			
10	5115		10 11	4													
			13 50/5"	8		12.5 ft. **DENVER FORMATION** Interbedded Claystone and Sandstone, very soft, highly weathered, gray, mostly fine sand, iron oxidation.	14	113									
15	5110		50/6"	6		Sandstone, very soft, highly weathered, white, mostly fine sand, poorly cemented, moist.	8	107							2,060		
			32 50/6"	8		As above except white to yellow brown.	8	106									
20	5105		10 20	8		Claystone, very soft, slightly weathered, gray, thinly bedded, medium plasticity, moist.	18	111									
25	5100		30 32	6		Interbedded Claystone and Sandstone, very soft, moderately weathered, claystone is gray, sandstone is orange, mostly fine sand, brown discontinuity infilling.	17	109		1	76	21					
30	5095		20 50/5"	8		Claystone, very soft, moderately weathered, olive gray, iron oxidation. 31.0 ft. **END OF EXPLORATION**											

Groundwater Depth / Monitoring Well Configuration | Geologic Graphic

General Notes:
1) Soil classifications are in general accordance with ASTM D2487 Standard Practice for Classification of Soils for Engineering Purposes (Unified Soil Classification System)
2) The maximum particle size identified in the material description is dependent on sampler dimensions.
3) Additional information is provided on the Boring Log Key.

Groundwater Data:

Date:	Elapsed Time:	Depth to Groundwater:
03/08/21	7 days	22.0 feet
06/21/21	112 days	20.1 feet
07/19/21	140 days	19.3 feet

BORING: TB-300

Project Name: TWP, Thornton Reach, Ph. 1
Project Number: 19049
Client's Name: AECOM
Owner's Name: City of Thornton
Drilling Subcontractor: Elite Drilling Services
Lithos Representative: A. Wilkes
Date(s) of Drilling: 11/03/20

Drilling and Sampling Methods

Drill Make and Model: CME ATV Rig
Drilling Method: Hollow Stem Auger (HSA)
Bit Type: Cutting Head
Casing Description: HSA
Hammer Weight (lbs)/Fall (in): 140/30
Sampler Type(s): Mod. Cal.
Sampler Diameter(s): 2.0 inches

LITHOS ENGINEERING

Boring Location: 160' NW of 160th and Quebec
Boring Elevation: 5203.0 feet
Notes: Elevation estimated from AECOM plan and profile drawings.

Sampling Data | Visual Material Description | Laboratory Testing Results (In-Situ States; INDEX DATA; Strength & Compressibility)

Soil:
-GEOLOGIC INTERPRETATION-
USCS Classification (group symbol), particle sizes, density or consistency, color, moisture, other descriptions

Rock:
-GEOLOGIC INTERPRETATION-
Bedrock Classification, hardness, weather, color, texture, joint size, other descriptions

Depth (ft)	Elevation (ft)	Sample Identification	Blow Count/6 in	Recovery (in) / RQD (%)	Drilling Rate (min./ft.)	Visual Material Description	Moisture Content (%)	Dry Unit Weight (pcf)	Water Soluble Sulfates (%)	Gravel Content (%)	Sand Content (%)	Fines Content (%)	Liquid Limit (%)	Plasticity Index (%)	UCS (psf)	Swell Pressure (psf)	Swell Percent (%)
	5200					**FINE ALLUVIUM** LEAN CLAY with sand (CL), little fine sand, pale olive to brown, dry, medium plasticity.											
5	5195		12 26	6		7.5 ft. **DENVER FORMATION** Silty Claystone, very soft, moderately weathered, gray, dry, iron oxidation.											
10	5190		10 16	8		Silty Claystone with sand, very soft, slightly weathered, gray, little fine sand, dry, iron oxidation.	19	108					77	86	67	11,690	
			17 50/5"	6		Sandy Siltstone, soft, slightly weathered, yellow, some fine sand, dry, some iron oxidation.											
15	5185		18 28	6		Interbedded Claystone and Siltstone, soft, slightly weathered, gray, dry, some iron oxidation.	19	105					75	61	39	9,430	
			20 50/4"	8		Sandstone, soft, slightly weathered, olive, mostly fine sand, dry, few mica.											
20	5180		28 50/4"	8		Clayey Sandstone, soft, slightly weathered, yellowish olive, mostly fine sand, little clay, dry, few mica.	15	113					24	43	28	3,680	
25	5175		50/6"	6		As above except very soft, yellow, mostly medium sand.											
30	5170		50/6"	6		As above except yellowish brown.											

Groundwater Depth / Monitoring Well Configuration | Geologic Graphic

General Notes:
1) Soil classifications are in general accordance with ASTM D2487 Standard Practice for Classification of Soils for Engineering Purposes (Unified Soil Classification System)
2) The maximum particle size identified in the material description is dependent on sampler dimensions.
3) Additional information is provided on the Boring Log Key.

Groundwater Data:

Date:	Elapsed Time:	Depth to Groundwater:
11/10/20	7 days	19.1 feet
06/21/21	230 days	19.0 feet
07/19/21	258 days	18.7 feet

BORING: TB-300

Project Name: TWP, Thornton Reach, Ph. 1
Project Number: 19049
Client's Name: AECOM
Owner's Name: City of Thornton
Drilling Subcontractor: Elite Drilling Services
Lithos Representative: A. Wilkes
Date(s) of Drilling: 11/03/20

Drilling and Sampling Methods

Drill Make and Model: CME ATV Rig
Drilling Method: Hollow Stem Auger (HSA)
Bit Type: Cutting Head
Casing Description: HSA
Hammer Weight (lbs)/Fall (in): 140/30
Sampler Type(s): Mod. Cal.
Sampler Diameter(s): 2.0 inches

LITHOS ENGINEERING

Boring Location: 160' NW of 160th and Quebec
Boring Elevation: 5203.0 feet
Notes: Elevation estimated from AECOM plan and profile drawings.

Sampling Data | Visual Material Description | Laboratory Testing Results (In-Situ States; INDEX DATA; Strength & Compressibility)

Soil:
-GEOLOGIC INTERPRETATION-
USCS Classification (group symbol), particle sizes, density or consistency, color, moisture, other descriptions

Rock:
-GEOLOGIC INTERPRETATION-
Bedrock Classification, hardness, weather, color, texture, joint size, other descriptions

Depth (ft)	Elevation (ft)	Sample Identification	Blow Count/6 in	Recovery (in) / RQD (%)	Drilling Rate (min./ft.)	Visual Material Description	Moisture Content (%)	Dry Unit Weight (pcf)	Water Soluble Sulfates (%)	Gravel Content (%)	Sand Content (%)	Fines Content (%)	Liquid Limit (%)	Plasticity Index (%)	UCS (psf)	Swell Pressure (psf)	Swell Percent (%)
35	5170		50/4"	6		As above except weakly cemented. 36.0 ft. **END OF EXPLORATION**											

Groundwater Depth / Monitoring Well Configuration | Geologic Graphic

General Notes:
1) Soil classifications are in general accordance with ASTM D2487 Standard Practice for Classification of Soils for Engineering Purposes (Unified Soil Classification System)
2) The maximum particle size identified in the material description is dependent on sampler dimensions.
3) Additional information is provided on the Boring Log Key.

Groundwater Data:

Date:	Elapsed Time:	Depth to Groundwater:
11/10/20	7 days	19.1 feet
06/21/21	230 days	19.0 feet
07/19/21	258 days	18.7 feet

BORING: TB-400

Project Name: TWP, Thornton Reach, Ph. 1
Project Number: 19049
Client's Name: AECOM
Owner's Name: City of Thornton
Drilling Subcontractor: Authentic Drilling
Lithos Representative: A. Wilkes
Date(s) of Drilling: 10/02/20

Drilling and Sampling Methods

Drill Make and Model: CME Truck Rig
Drilling Method: Hollow Stem Auger (HSA)
Bit Type: Center Bit/Flat
Casing Description: HSA
Hammer Weight (lbs)/Fall (in): 140/30
Sampler Type(s): Mod. Cal.
Sampler Diameter(s): 2.0 inches

LITHOS ENGINEERING

Boring Location: 150'SW of 160th and Quebec
Boring Elevation: 5198.0 feet
Notes: Elevation estimated from AECOM plan and profile drawings.

Sampling Data | Visual Material Description | Laboratory Testing Results (In-Situ States; INDEX DATA; Strength & Compressibility)

Soil:
-GEOLOGIC INTERPRETATION-
USCS Classification (group symbol), particle sizes, density or consistency, color, moisture, other descriptions

Rock:
-GEOLOGIC INTERPRETATION-
Bedrock Classification, hardness, weather, color, texture, joint size, other descriptions

Depth (ft)	Elevation (ft)	Sample Identification	Blow Count/6 in	Recovery (in) / RQD (%)	Drilling Rate (min./ft.)	Visual Material Description	Moisture Content (%)	Dry Unit Weight (pcf)	Water Soluble Sulfates (%)	Gravel Content (%)	Sand Content (%)	Fines Content (%)	Liquid Limit (%)	Plasticity Index (%)	UCS (psf)	Swell Pressure (psf)	Swell Percent (%)
	5195					**SOFT DIG POTHOLE** Sample was not collected. Pea gravel not representative of native grounc conditions.											
						7.5 ft.											
5	5190		10 19	5		**DENVER FORMATION** Clayey Sandstone, very soft, completely weathered, olive yellow, mostly fine sand, little clay, dry, gypsum and calcite in sample.											
10	5185		11 32	6		Claystone, very soft, completely weathered, olive yellow, little fine sand, dry, gypsum and calcite in sample.	16	114				61					
			5 22	6		Clayey Sandstone, very soft, moderately weathered, olive yellow, mostly fine sand, some clay, dry.	18	107				46	44	19	13,682		
15	5180		9 21	6		Interbedded Siltstone and Claystone, very soft, moderately weathered, claystone is gray, sandstone is olive yellow, few fine sand.	21	102				45	15				
			20 48	8		Sandstone, very soft, moderately weathered, olive, mostly fine sand, fines present, moist.											
20	5175		28 50/6"	6		As above except less fines.	18	110							17,894		
25	5170		12 41	8		As above.	18	105				42			12,492		
30	5165		16 32	6		As above except few lenses of gray claystone. 31.0 ft. **END OF EXPLORATION**											

Groundwater Depth / Monitoring Well Configuration | Geologic Graphic

General Notes:
1) Soil classifications are in general accordance with ASTM D2487 Standard Practice for Classification of Soils for Engineering Purposes (Unified Soil Classification System)
2) The maximum particle size identified in the material description is dependent on sampler dimensions.
3) Additional information is provided on the Boring Log Key.

Groundwater Data:

Date:	Elapsed Time:	Depth to Groundwater:
10/09/20	7 days	19.3 feet
06/21/21	262 days	DNE
07/19/21	290 days	DNE

BORING: TB-500

Project Name: TWP, Thornton Reach, Ph. 1
Project Number: 19049
Client's Name: AECOM
Owner's Name: City of Thornton
Drilling Subcontractor: Authentic Drilling
Lithos Representative: M. Smith
Date(s) of Drilling: 03/11/21

Drilling and Sampling Methods

Drill Make and Model: CME 55-300
Drilling Method: Hollow Stem Auger (HSA)
Bit Type: Cutting Head
Casing Description: HSA
Hammer Weight (lbs)/Fall (in): 140/30
Sampler Type(s): Mod. Cal., Split Spoon
Sampler Diameter(s): 2.0 inches

LITHOS ENGINEERING

Boring Location: 1,050'S of 156th on Quebec
Boring Elevation: 5120.0 feet
Notes: Elevation estimated from AECOM plan and profile drawings.

Sampling Data | Visual Material Description | Laboratory Testing Results (In-Situ States; INDEX DATA; Strength & Compressibility)

Soil:
-GEOLOGIC INTERPRETATION-
USCS Classification (group symbol), particle sizes, density or consistency, color, moisture, other descriptions

Rock:
-GEOLOGIC INTERPRETATION-
Bedrock Classification, hardness, weather, color, texture, joint size, other descriptions

Depth (ft)	Elevation (ft)	Sample Identification	Blow Count/6 in	Recovery (in) / RQD (%)	Drilling Rate (min./ft.)	Visual Material Description	Moisture Content (%)	Dry Unit Weight (pcf)	Water Soluble Sulfates (%)	Gravel Content (%)	Sand Content (%)	Fines Content (%)	Liquid Limit (%)	Plasticity Index (%)	UCS (psf)	Swell Pressure (psf)	Swell Percent (%)
	5125					**FINE ALLUVIUM** LEAN CLAY (CL), gray to dark bluish gray, dry, identified by auger cuttings.											
5	5120		3 5	6		As above except medium stiff, gray, dry to moist.	27	94		0	12	88	41	20			
10	5115		4 6	9		As above except trace fine sand, medium stiff, brownish gray, trace iron oxidation.											
			6 8	9		LEAN CLAY with sand (CL), little to some fine sand, stiff, yellowish brown, dry to moist. 15.0 ft.											
15	5110		4 6	10		**COARSE ALLUVIUM** Clayey SAND (SC), mostly fine to medium sand, some clay, loose, yellowish to reddish brown, moist.	20	106				37	22	8			
			5 10	6		As above except medium dense.	16	110									
20	5105		3 5 8	10		20.0 ft. **DENVER FORMATION** Claystone, very soft, moderately weathered, yellowish brown, trace fine sand, trace iron oxidation, dry, trace calcite.											
			9 15	6		Claystone with sand, very soft, moderately weathered, yellowish brown, little fine sand, few iron oxidation, no calcite, trace lignite, angular discontinuities.	27	95			78	67	39	8,636			
25	5095		5 13	6		Clayey Sandstone, very soft, moderately weathered, yellowish brown, mostly fine to medium sand, some clay, little iron oxidation, vertical bedding.	17	115			43	38	19				
30	5085		7 11	6		Claystone, very soft, moderately weathered, gray, trace fine sand, trace iron oxidation, dry, trace calcite. 31.0 ft. **END OF EXPLORATION**											

Groundwater Depth / Monitoring Well Configuration | Geologic Graphic

General Notes:
1) Soil classifications are in general accordance with ASTM D2487 Standard Practice for Classification of Soils for Engineering Purposes (Unified Soil Classification System)
2) The maximum particle size identified in the material description is dependent on sampler dimensions.
3) Additional information is provided on the Boring Log Key.

Groundwater Data:

Date:	Elapsed Time:	Depth to Groundwater:
03/18/21	7 days	10.1 feet
06/21/21	102 days	6.7 feet
07/19/21	130 days	7.6 feet

BORING: TB-600

Project Name: TWP, Thornton Reach, Ph. 1
Project Number: 19049
Client's Name: AECOM
Owner's Name: City of Thornton
Drilling Subcontractor: Elite Drilling Services
Lithos Representative: Adam Pring
Date(s) of Drilling: 05/08/20

Drilling and Sampling Methods

Drill Make and Model: CME 55
Drilling Method: Hollow Stem Auger (HSA)
Bit Type: Cutting Head
Casing Description: HSA
Hammer Weight (lbs)/Fall (in): 140/30
Sampler Type(s): Mod. Cal.
Sampler Diameter(s): 2.0 inches

LITHOS ENGINEERING

Boring Location: 1,200'S of 156th on Quebec
Boring Elevation: 5125.0 feet
Notes: Elevation estimated from AECOM plan and profile drawings.

Sampling Data | Visual Material Description | Laboratory Testing Results (In-Situ States; INDEX DATA; Strength & Compressibility)

Soil:
-GEOLOGIC INTERPRETATION-
USCS Classification (group symbol), particle sizes, density or consistency, color, moisture, other descriptions

Rock:
-GEOLOGIC INTERPRETATION-
Bedrock Classification, hardness, weather, color, texture, joint size, other descriptions

Depth (ft)	Elevation (ft)	Sample Identification	Blow Count/6 in	Recovery (in) / RQD (%)	Drilling Rate (min./ft.)	Visual Material Description	Moisture Content (%)	Dry Unit Weight (pcf)	Water Soluble Sulfates (%)	Gravel Content (%)	Sand Content (%)	Fines Content (%)	Liquid Limit (%)	Plasticity Index (%)	UCS (psf)	Swell Pressure (psf)	Swell Percent (%)
	5195					**SOFT DIG POTHOLE** Sample was not collected. Pea gravel not representative of native grounc conditions.											
						7.5 ft.											
5	5190		4 7	8		**FINE ALLUVIUM** Sandy LEAN CLAY (CL), some fine sand, few silt, stiff, light brown, moist.	20	96					66	37	20		
						10.0 ft.											
10	5185		10 30	4		**COARSE ALLUVIUM** Silty SAND (SM), mostly fine sand, little silt, dense, light brown, dry to moist.	15	109		1	74	25					
						12.0 ft. **DENVER FORMATION** Silty Claystone, very soft, highly weathered, light brown, some iron oxidation.											
			4 9	4													
15	5180		7 15	4		Clayey Sandstone, very soft, highly weathered, light brown, mostly fine sand, some clay, some iron oxidation.	23	101					47	44	22	4,228	
			8 30	8		Silty Claystone, very soft, highly weathered, little silt, light brown, minor iron oxidation.											
20	5175		50	8		As above.	23	104					52	44	25	14,734	
25	5170		12 23	8		Claystone, very soft, highly weathered, light gray to light brown, iron oxidation.	18	114							18,029		
30	5165		6 20	4		As above except gray.											

Groundwater Depth / Monitoring Well Configuration | Geologic Graphic

General Notes:
1) Soil classifications are in general accordance with ASTM D2487 Standard Practice for Classification of Soils for Engineering Purposes (Unified Soil Classification System)
2) The maximum particle size identified in the material description is dependent on sampler dimensions.
3) Additional information is provided on the Boring Log Key.

Groundwater Data:

Date:	Elapsed Time:	Depth to Groundwater:
05/15/20	7 days	14.1 feet
06/21/21	409 days	13.4 feet
07/19/21	437 days	14.1 feet

BORING: TB-600

Project Name: TWP, Thornton Reach, Ph. 1
Project Number: 19049
Client's Name: AECOM
Owner's Name: City of Thornton
Drilling Subcontractor: Elite Drilling Services
Lithos Representative: Adam Pring
Date(s) of Drilling: 05/08/20

Drilling and Sampling Methods

Drill Make and Model: CME 55
Drilling Method: Hollow Stem Auger (HSA)
Bit Type: Cutting Head
Casing Description: HSA
Hammer Weight (lbs)/Fall (in): 140/30
Sampler Type(s): Mod. Cal.
Sampler Diameter(s): 2.0 inches

LITHOS ENGINEERING

Boring Location: 1,200'S of 156th on Quebec
Boring Elevation: 5125.0 feet
Notes: Elevation estimated from AECOM plan and profile drawings.

Sampling Data | Visual Material Description | Laboratory Testing Results (In-Situ States; INDEX DATA; Strength & Compressibility)

Soil:
-GEOLOGIC INTERPRETATION-
USCS Classification (group symbol), particle sizes, density or consistency, color, moisture, other descriptions

Rock:
-GEOLOGIC INTERPRETATION-
Bedrock Classification, hardness, weather, color, texture, joint size, other descriptions

Depth (ft)	Elevation (ft)	Sample Identification	Blow Count/6 in	Recovery (in) / RQD (%)	Drilling Rate (min./ft.)	Visual Material Description	Moisture Content (%)	Dry Unit Weight (pcf)	Water Soluble Sulfates (%)	Gravel Content (%)	Sand Content (%)	Fines Content (%)	Liquid Limit (%)	Plasticity Index (%)	UCS (psf)	Swell Pressure (psf)	Swell Percent (%)
35	5090		5 5	4		As above except light brown.											
			10 12	8		Clayey Siltstone, very soft, moderately weathered, light brown.											
40	5085		50/8"	4		As above.											
			5 5	4		Silty Sandstone, soft, moderately weathered, gray to brown, mostly fine sand, little silt. Sandstone, soft, moderately weathered, gray to brown, mostly fine sand.											
45	5080		50/8"	4		As above except slightly weathered, blueish gray. 46.0 ft. **END OF EXPLORATION**											

Groundwater Depth / Monitoring Well Configuration | Geologic Graphic

General Notes:
1) Soil classifications are in general accordance with ASTM D2487 Standard Practice for Classification of Soils for Engineering Purposes (Unified Soil Classification System)
2) The maximum particle size identified in the material description is dependent on sampler dimensions.
3) Additional information is provided on the Boring Log Key.

Groundwater Data:

Date:	Elapsed Time:	Depth to Groundwater:
05/15/20	7 days	14.1 feet
06/21/21	409 days	13.4 feet
07/19/21	437 days	14.1 feet

LITHOS ENGINEERING

Thornton WATER PROJECT

TWP SEGMENT A,
PROJECT No. 12-777H5

CLIENT

CITY OF THORNTON
12450 WASHINGTON ST,
THORNTON, CO 80241
720.977.6700 tel 000.000.0000 fax
www.thorntonwaterproject.com

CONSULTANT

LITHOS ENGINEERING
2750 S WADSWORTH BLVD, SUITE D-200
DENVER, COLORADO 80227
T 303.625.9502
WWW.LITHOSENG.COM

ISSUE/REVISION

I/R	DATE	DESCRIPTION
A	10/14/2021	95% PREFINAL SUBMITTAL

VERIFIED SCALES

SCALE: NTS

BAR IS ONE INCH ON ORIGINAL DRAWING
0 1"
IF NOT ONE INCH ON THIS SHEET, ADJUST SCALES ACCORDINGLY

DRAWN BY:	JP
CHKD BY:	LH
CHKD BY:	NS
APPD BY:	NS

PROJECT NUMBER

60619101

SHEET TITLE

TUNNEL BORING LOGS 1

SHEET NUMBER

DT30

Z:\Shared\S-Drive\Projects\19049 Thornton RWL - Thornton Reach\Design\Dwgs\Phase I - Boring Logs.dwg

BORING: TB-700

Project Name: TWP, Thornton Reach, Ph. 1
Project Number: 19049
Client's Name: AECOM
Owner's Name: City of Thornton
Drilling Subcontractor: Elite Drilling Services
Lithos Representative: Adam Pring
Date(s) of Drilling: 05/27/20

Drilling and Sampling Methods

Drill Make and Model: CME 55
Drilling Method: Solid Stem Auger
Bit Type: Cutting Head
Casing Description: N/A
Hammer Weight (lbs)/Fall (in): 140/30
Sampler Type(s): Mod. Cal.
Sampler Diameter(s): 2.0 inches

LITHOS ENGINEERING

Boring Location: 300'S of Heritage on Quebec
Boring Elevation: 5126.0 feet
Notes: Elevation estimated from AECOM plan and profile drawings.

Sampling Data | Visual Material Description | Laboratory Testing Results

Depth (ft)	Elevation (ft)	Sample Identification	Blow Count/6 in	Recovery (in) / RQD (%)	Drilling Rate (min./ft.)	Visual Material Description (Soil: -GEOLOGIC INTERPRETATION- USCS Classification (group symbol), particle sizes, density or consistency, color, moisture, other descriptions; Rock: -GEOLOGIC INTERPRETATION- Bedrock Classification, hardness, weather, color, texture, joint size, other descriptions)	Moisture Content (%)	Dry Unit Weight (pcf)	Water Soluble Sulfates (%)	Gravel Content (%)	Sand Content (%)	Fines Content (%)	Liquid Limit (%)	Plasticity Index (%)	UCS (psf)	Swell Pressure (psf)	Swell Percent (%)
	5125					**FILL**											
						Sandy LEAN CLAY (CL), some fine sand, trace medium sand, brown, moist, organics, identified from auger cuttings.											
						6.0 ft.											
5	5120		2 3	8		**FINE ALLUVIUM** LEAN CLAY with sand (CL), little medium sand, medium stiff, dark brown, moist.											
10	5115		2 3	8		Sandy LEAN CLAY (CL), some medium sand, few gravel, trace silt, medium stiff, brown, moist.	14	113			7	39	54	32	15	2,240	
15	5110		3 6	8		As above except stiff, light brown.	17	107				50	25	10			
						18.0 ft.											
						DENVER FORMATION Top of bedrock determined from change in drill rig action.											
20	5105		50/9"	4		Clayey Sandstone, very soft, completely weathered, light brown to brown, mostly fine sand, some clay, wet.	22	99				37	51	14	11,150		
			50/8"	4		Sandstone, very soft, highly weathered, light brown, mostly fine to medium sand, trace clay, iron oxidation.											
25	5100		50/4"	4		Clayey Sandstone, very soft, highly weathered, light brown, mostly fine to medium sand, some silt, iron oxidation.	20	106				34	40	12	10,970		
			50/5"	4		As above.											
30	5095		50/3"	3		As above except medium hard, moderately weathered, brownish gray to light gray, mostly fine sand.	15	91				32	NV	NP	6,740		

Groundwater Depth / Monitoring Well Configuration

General Notes:
1) Soil classifications are in general accordance with ASTM D2487 Standard Practice for Classification of Soils for Engineering Purposes (Unified Soil Classification System)
2) The maximum particle size identified in the material description is dependent on sampler dimensions.
3) Additional information is provided on the Boring Log Key.

Groundwater Data:

Date:	Elapsed Time:	Depth to Groundwater:
06/03/20	7 days	13.8 feet
06/21/21	390 days	13.1 feet
07/19/21	418 days	13.8 feet

BORING: TB-700

Project Name: TWP, Thornton Reach, Ph. 1
Project Number: 19049
Client's Name: AECOM
Owner's Name: City of Thornton
Drilling Subcontractor: Elite Drilling Services
Lithos Representative: Adam Pring
Date(s) of Drilling: 05/27/20

Drilling and Sampling Methods

Drill Make and Model: CME 55
Drilling Method: Solid Stem Auger
Bit Type: Cutting Head
Casing Description: N/A
Hammer Weight (lbs)/Fall (in): 140/30
Sampler Type(s): Mod. Cal.
Sampler Diameter(s): 2.0 inches

LITHOS ENGINEERING

Boring Location: 300'S of Heritage on Quebec
Boring Elevation: 5126.0 feet
Notes: Elevation estimated from AECOM plan and profile drawings.

Sampling Data | Visual Material Description | Laboratory Testing Results

Depth (ft)	Elevation (ft)	Sample Identification	Blow Count/6 in	Recovery (in) / RQD (%)	Drilling Rate (min./ft.)	Visual Material Description (Soil: -GEOLOGIC INTERPRETATION- USCS Classification (group symbol), particle sizes, density or consistency, color, moisture, other descriptions; Rock: -GEOLOGIC INTERPRETATION- Bedrock Classification, hardness, weather, color, texture, joint size, other descriptions)	Moisture Content (%)	Dry Unit Weight (pcf)	Water Soluble Sulfates (%)	Gravel Content (%)	Sand Content (%)	Fines Content (%)	Liquid Limit (%)	Plasticity Index (%)	UCS (psf)	Swell Pressure (psf)	Swell Percent (%)
35	5090		50/3"	3		Sandy Claystone, soft, moderately weathered, brown to gray, some fine sand, trace medium sand.											
			50/5"	4		Silty, clayey Sandstone, soft, slightly weathered, gray, mostly fine sand, little silty clay.											
			50/3"	3		Silty Sandstone, soft, slightly weathered, light gray and blue gray, mostly fine sand, trace medium sand, little silt.											
40	5085		50/2"	2		As above.											
45	5080		50/3"	2		Silty Claystone, soft, moderately weathered, dark gray.											
50	5075		50/2"	2		Silty sandstone, medium hard, slightly weathered, light gray, mostly fine sand, little silt.											
						51.0 ft.											
						END OF EXPLORATION											

Groundwater Depth / Monitoring Well Configuration

General Notes:
1) Soil classifications are in general accordance with ASTM D2487 Standard Practice for Classification of Soils for Engineering Purposes (Unified Soil Classification System)
2) The maximum particle size identified in the material description is dependent on sampler dimensions.
3) Additional information is provided on the Boring Log Key.

Groundwater Data:

Date:	Elapsed Time:	Depth to Groundwater:
06/03/20	7 days	13.8 feet
06/21/21	390 days	13.1 feet
07/19/21	418 days	13.8 feet

BORING: TB-800

Project Name: TWP, Thornton Reach, Ph. 1
Project Number: 19049
Client's Name: AECOM
Owner's Name: City of Thornton
Drilling Subcontractor: Elite Drilling Services
Lithos Representative: Adam Pring
Date(s) of Drilling: 04/29/20

Drilling and Sampling Methods

Drill Make and Model: CME 55
Drilling Method: Hollow Stem Auger, HQ Core
Bit Type: Cutting Head
Casing Description: Auger, HQ Core Barrel
Hammer Weight (lbs)/Fall (in): 140 / 30
Sampler Type(s): Mod. Cal., HQ Core
Sampler Diameter(s): 2.0 inches, 2.5 inches

LITHOS ENGINEERING

Boring Location: 490'S of Heritage on Quebec
Boring Elevation: 5124.0 feet
Notes: Elevation estimated from AECOM plan and profile drawings.

Sampling Data | Visual Material Description | Laboratory Testing Results

Depth (ft)	Elevation (ft)	Sample Identification	Blow Count/6 in	Recovery (in) / RQD (%)	Drilling Rate (min./ft.)	Visual Material Description (Soil: -GEOLOGIC INTERPRETATION- USCS Classification (group symbol), particle sizes, density or consistency, color, moisture, other descriptions; Rock: -GEOLOGIC INTERPRETATION- Bedrock Classification, hardness, weather, color, texture, joint size, other descriptions)	Moisture Content (%)	Dry Unit Weight (pcf)	Water Soluble Sulfates (%)	Gravel Content (%)	Sand Content (%)	Fines Content (%)	Liquid Limit (%)	Plasticity Index (%)	UCS (psf)	Swell Pressure (psf)	Swell Percent (%)
	5130					**SOFT DIG POTHOLE** Sample was not collected. Pea gravel not representative of native ground conditions.											
			3 4			**FILL** Sandy LEAN CLAY (CL), little sand trace to few fine gravel, medium stiff, brown to dark brown, moist, iron oxidation staining, wood chips, coarser at deeper depths.											
						6.0 ft.											
5	5125		5 6			**FINE ALLUVIUM** Sandy LEAN CLAY (CL), little sand trace to few fine gravel, stiff, brown to dark brown, moist, iron oxidation staining, wood chips, coarser at deeper depths.											
						9.0 ft.											
10	5120		3 4			As above.											
15	5115		2 3	4		LEAN CLAY with sand (CL), little fine sand, medium stiff, dark brown to black, moist.											
			2 3	4		Sandy LEAN CLAY (CL), some fine sand, loose, dark brown to black, moist.											
						20.0 ft.											
20	5110		4 4	4		**COARSE ALLUVIUM** Clayey SAND (SC), mostly fine sand, little clay, loose, dark brown to black, moist, trace calcite, iron oxidation.											
			4 6	4		Poorly graded SAND (SP), mostly medium sand, loose, tan to tanish brown, wet.											
						25.0 ft.											
25	5105		50/7"	8		**DENVER FORMATION** Clayey Sandstone, soft, highly weathered, dark tan, mostly medium sand, little clay, iron oxidation.											
			50/ 11"	8		As above.	26	98							11,556		
30	5095		50/5"	4		As above.											

Groundwater Depth / Monitoring Well Configuration

General Notes:
1) Soil classifications are in general accordance with ASTM D2487 Standard Practice for Classification of Soils for Engineering Purposes (Unified Soil Classification System)
2) The maximum particle size identified in the material description is dependent on sampler dimensions.
3) Additional information is provided on the Boring Log Key.

Groundwater Data:

Date:	Elapsed Time:	Depth to Groundwater:
05/05/20	7 days	14.0 feet
06/21/21	419 days	DNE
07/19/21	447 days	DNE

BORING: TB-800

Project Name: TWP, Thornton Reach, Ph. 1
Project Number: 19049
Client's Name: AECOM
Owner's Name: City of Thornton
Drilling Subcontractor: Elite Drilling Services
Lithos Representative: Adam Pring
Date(s) of Drilling: 04/29/20

Drilling and Sampling Methods

Drill Make and Model: CME 55
Drilling Method: Hollow Stem Auger, HQ Core
Bit Type: Cutting Head
Casing Description: Auger, HQ Core Barrel
Hammer Weight (lbs)/Fall (in): 140 / 30
Sampler Type(s): Mod. Cal., HQ Core
Sampler Diameter(s): 2.0 inches, 2.5 inches

LITHOS ENGINEERING

Boring Location: 490'S of Heritage on Quebec
Boring Elevation: 5124.0 feet
Notes: Elevation estimated from AECOM plan and profile drawings.

Sampling Data | Visual Material Description | Laboratory Testing Results

Depth (ft)	Elevation (ft)	Sample Identification	Blow Count/6 in	Recovery (in) / RQD (%)	Drilling Rate (min./ft.)	Visual Material Description (Soil: -GEOLOGIC INTERPRETATION- USCS Classification (group symbol), particle sizes, density or consistency, color, moisture, other descriptions; Rock: -GEOLOGIC INTERPRETATION- Bedrock Classification, hardness, weather, color, texture, joint size, other descriptions)	Moisture Content (%)	Dry Unit Weight (pcf)	Water Soluble Sulfates (%)	Gravel Content (%)	Sand Content (%)	Fines Content (%)	Liquid Limit (%)	Plasticity Index (%)	UCS (psf)	Swell Pressure (psf)	Swell Percent (%)
35	5090		50/5"	8		As above.											
			14 0	12		Claystone, very soft, moderately weathered, light gray to dark gray, silty pockets throughout, iron oxidation.											
			50/5"	8		As above.											
			50/5"	4		Sandstone with clay, very soft, highly weathered, tan to brown, mostly medium sand, few clay.											
40	5085		50/2"			As above except moderately weathered, mottled dark tanish brown to light gray.											
45	5080			15 58	3.5	Silty clayey Sandstone, soft, moderately weathered, light gray, mostly fine to medium sand, little silty clay. Silty Claystone, soft to medium, slightly weathered, light gray to dark gray. Horizontal bedding at 44° - very rough, stepped, 1", no weathering.	18	111							30,419		
				57 91	2.3	Sandstone, medium hard, fresh, blueish gray, mostly medium sand.											
50	5075					Claystone, medium hard, fresh, blue gray.	15	117							139, 348		
						50.0 ft.											
						END OF EXPLORATION											

Groundwater Depth / Monitoring Well Configuration

General Notes:
1) Soil classifications are in general accordance with ASTM D2487 Standard Practice for Classification of Soils for Engineering Purposes (Unified Soil Classification System)
2) The maximum particle size identified in the material description is dependent on sampler dimensions.
3) Additional information is provided on the Boring Log Key.

Groundwater Data:

Date:	Elapsed Time:	Depth to Groundwater:
06/05/20	7 days	14.0 feet
06/21/21	419 days	DNE
07/19/21	447 days	DNE

BORING: TB-900

Project Name: TWP, Thornton Reach, Ph. 1
Project Number: 19049
Client's Name: AECOM
Owner's Name: City of Thornton
Drilling Subcontractor: Elite Drilling Services
Lithos Representative: J.Halverson
Date(s) of Drilling: 04/12/21

Drilling and Sampling Methods

Drill Make and Model: 48X Mobile
Drilling Method: Hollow Stem Auger (HSA)
Bit Type: Cutting Head
Casing Description: HSA
Hammer Weight (lbs)/Fall (in): 140/30
Sampler Type(s): Mod. Cal.
Sampler Diameter(s): 2.0 inches

LITHOS ENGINEERING

Boring Location: W.E470 onramp @ Quebec St.
Boring Elevation: 5192.0 feet
Notes: Elevation estimated from AECOM plan and profile.

Sampling Data | Visual Material Description | Laboratory Testing Results

Depth (ft)	Elevation (ft)	Sample Identification	Blow Count/6 in	Recovery (in) / RQD (%)	Drilling Rate (min./ft.)	Visual Material Description (Soil: -GEOLOGIC INTERPRETATION- USCS Classification (group symbol), particle sizes, density or consistency, color, moisture, other descriptions; Rock: -GEOLOGIC INTERPRETATION- Bedrock Classification, hardness, weather, color, texture, joint size, other descriptions)	Moisture Content (%)	Dry Unit Weight (pcf)	Water Soluble Sulfates (%)	Gravel Content (%)	Sand Content (%)	Fines Content (%)	Liquid Limit (%)	Plasticity Index (%)	UCS (psf)	Swell Pressure (psf)	Swell Percent (%)
	5195					**FILL** LEAN CLAY (CL), few coarse sand, yellowish brown to olive brown, dry to moist, dry on surface, moist 1-2' down, description from auger cuttings and wall of borehole.											
						6.0 ft.											
5	5190		8 13	9		**DENVER FORMATION** Claystone, very soft, highly weathered, light gray to gray, dry to moist, iron oxidation, white precipitate.											
10	5185		50/5"	7		Silty Sandstone, very soft, highly weathered, pale olive, mostly fine sand, little silt, dry to moist, iron oxidation.	6	120				15	NV	NP			
15	5180		50/6"	9		As above.	6	84				15	NV	NP			
20	5175		25 25/3"	10		Sandy Claystone, very soft, moderately weathered, gray to pale olive, some fine sand, iron oxidation, white precipitate.	14	118				69	38	16	16,985		
			8 35	8		As above except moderately to highly weathered.											
25	5170		26 24/4"	8		Claystone with sand, very soft, slightly to moderately weathered, pale olive, little fine sand, moist, iron oxidation.	13	115				79	37	18	23,006		
			24 26/2"	8		Sandstone, very soft, moderately to highly weathered, pale olive, mostly fine sand, dry to moist, iron oxidation.											
30	5165		50/5"	8		As above except moderately weathered, mostly fine to medium sand, dry, iron oxidation, few well cemented sandstone nodules ≥ 1cm diameter, soft to medium, pale olive.	6	119				17	NV	NP			

Groundwater Depth / Monitoring Well Configuration

General Notes:
1) Soil classifications are in general accordance with ASTM D2487 Standard Practice for Classification of Soils for Engineering Purposes (Unified Soil Classification System)
2) The maximum particle size identified in the material description is dependent on sampler dimensions.
3) Additional information is provided on the Boring Log Key.

Groundwater Data:

Date:	Elapsed Time:	Depth to Groundwater:
04/19/21	7 days	48.9 feet
06/21/21	70 days	47.3 feet
07/19/21	98 days	48.0 feet

BORING: TB-900

Project Name: TWP, Thornton Reach, Ph. 1
Project Number: 19049
Client's Name: AECOM
Owner's Name: City of Thornton
Drilling Subcontractor: Elite Drilling Services
Lithos Representative: J.Halverson
Date(s) of Drilling: 04/12/21

Drilling and Sampling Methods

Drill Make and Model: 48X Mobile
Drilling Method: Hollow Stem Auger (HSA)
Bit Type: Cutting Head
Casing Description: HSA
Hammer Weight (lbs)/Fall (in): 140/30
Sampler Type(s): Mod. Cal.
Sampler Diameter(s): 2.0 inches

LITHOS ENGINEERING

Boring Location: W.E470 onramp @ Quebec St.
Boring Elevation: 5192.0 feet
Notes: Elevation estimated from AECOM plan and profile.

Sampling Data | Visual Material Description | Laboratory Testing Results

Depth (ft)	Elevation (ft)	Sample Identification	Blow Count/6 in	Recovery (in) / RQD (%)	Drilling Rate (min./ft.)	Visual Material Description (Soil: -GEOLOGIC INTERPRETATION- USCS Classification (group symbol), particle sizes, density or consistency, color, moisture, other descriptions; Rock: -GEOLOGIC INTERPRETATION- Bedrock Classification, hardness, weather, color, texture, joint size, other descriptions)	Moisture Content (%)	Dry Unit Weight (pcf)	Water Soluble Sulfates (%)	Gravel Content (%)	Sand Content (%)	Fines Content (%)	Liquid Limit (%)	Plasticity Index (%)	UCS (psf)	Swell Pressure (psf)	Swell Percent (%)
	5195		50/6"	8		As above.											
			50/6"	8		As above except moist.											
35	5190																
40	5185		15 23	9		Claystone, very soft, slightly to moderately weathered, gray to brown, moist, iron oxidation.											
						44' - Auger grinding.											
45	5180		25 23	12		As above except slightly weathered, grayish brown.											
50	5175		50/5"	8		As above except slightly weathered, dark tan to brown, few fine sand, iron oxidation, white precipitate, trace mica.	8	96			17	NV	NP	1,015			
						51.0 ft.											
						END OF EXPLORATION											

Groundwater Depth / Monitoring Well Configuration

General Notes:
1) Soil classifications are in general accordance with ASTM D2487 Standard Practice for Classification of Soils for Engineering Purposes (Unified Soil Classification System)
2) The maximum particle size identified in the material description is dependent on sampler dimensions.
3) Additional information is provided on the Boring Log Key.

Groundwater Data:

Date:	Elapsed Time:	Depth to Groundwater:
04/19/21	7 days	48.9 feet
06/21/21	70 days	47.3 feet
07/19/21	98 days	48.0 feet

BORING: TB-1000

Project Name: TWP, Thornton Reach, Ph. 1
Project Number: 19049
Client's Name: AECOM
Owner's Name: City of Thornton
Drilling Subcontractor: Elite Drilling Services
Lithos Representative: J.Halverson
Date(s) of Drilling: 04/12/21

Drilling and Sampling Methods

Drill Make and Model: 48X Mobile
Drilling Method: Hollow Stem Auger (HSA)
Bit Type: Cutting Head
Casing Description: HSA
Hammer Weight (lbs)/Fall (in): 140/30
Sampler Type(s): Mod. Cal.
Sampler Diameter(s): 2.0 inches

LITHOS ENGINEERING

Boring Location: W.E470 onramp @ Quebec St.
Boring Elevation: 5182.0 feet
Notes: Elevation estimated from AECOM plan and profile.

Sampling Data | Visual Material Description | Laboratory Testing Results

Depth (ft)	Elevation (ft)	Sample Identification	Blow Count/6 in	Recovery (in) / RQD (%)	Drilling Rate (min./ft.)	Visual Material Description (Soil: -GEOLOGIC INTERPRETATION- USCS Classification (group symbol), particle sizes, density or consistency, color, moisture, other descriptions; Rock: -GEOLOGIC INTERPRETATION- Bedrock Classification, hardness, weather, color, texture, joint size, other descriptions)	Moisture Content (%)	Dry Unit Weight (pcf)	Water Soluble Sulfates (%)	Gravel Content (%)	Sand Content (%)	Fines Content (%)	Liquid Limit (%)	Plasticity Index (%)	UCS (psf)	Swell Pressure (psf)	Swell Percent (%)
	5185					**FILL** Sandy LEAN CLAY (CL), some medium to coarse sand, pale olive, dry to moist, dry on surface, moist 1-2' down, description from auger cuttings and wall of borehole.											
						6.0 ft.											
5	5180		10 17	6		**DENVER FORMATION** Interbedded Sandstone and Claystone, very soft, highly to completely weathered, pale olive to gray, some fine to coarse sand, moist, coarser sand present in sandstone interbeds, iron oxidation. As above.											
			11 23	8													
10	5175		23 27/3"	8		Clayey Sandstone, very soft, highly to completely weathered, pale olive to gray, mostly fine to coarse sand, some clay, moist, iron oxidation.	14	116				41	28	11	3,982		
15	5170		11 27	9		Claystone, very soft, slightly weathered, gray, few to little fine sand, iron oxidation.											
			11 30	10		Sandstone, very soft, moderately weathered, orangeish pale olive, mostly fine sand, moist, iron oxidation.											
20	5165		20 30/4"	9		As above except highly weathered, increase in grain size.	11	102				15	NV	NP	1,242		
			21 29/3"	10		Silty Sandstone, very soft, moderately weathered, orangeish pale olive, mostly fine sand, few to little silt, moist, iron oxidation.	13	106				13	NV	NP			
			24 26/5"	12		As above except reduced iron oxidation.	15	107				13	NV	NP	1,098		
25	5160		11 15	9		Claystone, very soft, moderately weathered, gray, moist, iron oxidation.											
30	5155		20 30/4"	8		Sandstone, very soft, moderately weathered, pale olive, mostly fine sand, moist, iron oxidation, claystone nodules ≥ 1cm observed, trace to few mica.											

Groundwater Depth / Monitoring Well Configuration

General Notes:
1) Soil classifications are in general accordance with ASTM D2487 Standard Practice for Classification of Soils for Engineering Purposes (Unified Soil Classification System)
2) The maximum particle size identified in the material description is dependent on sampler dimensions.
3) Additional information is provided on the Boring Log Key.

Groundwater Data:

Date:	Elapsed Time:	Depth to Groundwater:
04/19/21	7 days	19.8 feet
06/21/21	70 days	20.7 feet
07/19/21	98 days	21.0 feet

BORING: TB-1000

Project Name: TWP, Thornton Reach, Ph. 1
Project Number: 19049
Client's Name: AECOM
Owner's Name: City of Thornton
Drilling Subcontractor: Elite Drilling Services
Lithos Representative: J.Halverson
Date(s) of Drilling: 04/12/21

Drilling and Sampling Methods

Drill Make and Model: 48X Mobile
Drilling Method: Hollow Stem Auger (HSA)
Bit Type: Cutting Head
Casing Description: HSA
Hammer Weight (lbs)/Fall (in): 140/30
Sampler Type(s): Mod. Cal.
Sampler Diameter(s): 2.0 inches

LITHOS ENGINEERING

Boring Location: W.E470 onramp @ Quebec St.
Boring Elevation: 5182.0 feet
Notes: Elevation estimated from AECOM plan and profile.

Sampling Data | Visual Material Description | Laboratory Testing Results

Depth (ft)	Elevation (ft)	Sample Identification	Blow Count/6 in	Recovery (in) / RQD (%)	Drilling Rate (min./ft.)	Visual Material Description (Soil: -GEOLOGIC INTERPRETATION- USCS Classification (group symbol), particle sizes, density or consistency, color, moisture, other descriptions; Rock: -GEOLOGIC INTERPRETATION- Bedrock Classification, hardness, weather, color, texture, joint size, other descriptions)	Moisture Content (%)	Dry Unit Weight (pcf)	Water Soluble Sulfates (%)	Gravel Content (%)	Sand Content (%)	Fines Content (%)	Liquid Limit (%)	Plasticity Index (%)	UCS (psf)	Swell Pressure (psf)	Swell Percent (%)
35	5150		35 50/5"	10		Interbedded Sandstone and Claystone, very soft, moderately weathered, olive to gray, moist, iron oxidation, trace to few mica.											
40	5145		31 39	8		As above except iron oxidation, white precipitate.											
						41.0 ft.											
						END OF EXPLORATION											

Groundwater Depth / Monitoring Well Configuration

General Notes:
1) Soil classifications are in general accordance with ASTM D2487 Standard Practice for Classification of Soils for Engineering Purposes (Unified Soil Classification System)
2) The maximum particle size identified in the material description is dependent on sampler dimensions.
3) Additional information is provided on the Boring Log Key.

Groundwater Data:

Date:	Elapsed Time:	Depth to Groundwater:
04/19/21	7 days	19.8 feet
06/21/21	70 days	20.7 feet
07/19/21	98 days	21.0 feet

Z:\Shared\S-Drive\Projects\19049 Thornton R\WL - Thornton Reach\Design\Dwgs\Phase I - Boring Logs.dwg

LITHOS ENGINEERING

Thornton WATER PROJECT

TWP SEGMENT A,
PROJECT No. 12-777H5

CLIENT

CITY OF THORNTON
12450 WASHINGTON ST,
THORNTON, CO 80241
720.977.6700 tel 000.000.0000 fax
www.thorntonwaterproject.com

CONSULTANT

LITHOS ENGINEERING
2750 S WADSWORTH BLVD, SUITE D-200
DENVER, COLORADO 80227
T 303.625.9502
WWW.LITHOSENG.COM

ISSUE/REVISION

I/R	DATE	DESCRIPTION
A	10/14/2021	95% PREFINAL SUBMITTAL

VERIFIED SCALES

SCALE: NTS

BAR IS ONE INCH ON ORIGINAL DRAWING
0 1"
IF NOT ONE INCH ON THIS SHEET, ADJUST SCALES ACCORDINGLY

DRAWN BY:	JP
CHKD BY:	LH
CHKD BY:	NS
APPD BY:	NS

PROJECT NUMBER

60619101

SHEET TITLE

TUNNEL BORING LOGS 2

SHEET NUMBER

DT31

BORING: TB-1100

Project Name: TWP, Thornton Reach, Ph. 1
Project Number: 19049
Client's Name: AECOM
Owner's Name: City of Thornton
Drilling Subcontractor: Elite Drilling Services
Lithos Representative: J.Halverson
Date(s) of Drilling: 04/13/21

Drilling and Sampling Methods

Drill Make and Model: 48X Mobile
Drilling Method: Hollow Stem Auger (HSA)
Bit Type: Cutting Head
Casing Description: HSA
Hammer Weight (lbs)/Fall (in): 140/30
Sampler Type(s): Mod. Cal.
Sampler Diameter(s): 2.0 inches

LITHOS ENGINEERING

Boring Location: E.E470 offramp @ Quebec St.
Boring Elevation: 5180.0 feet
Notes: Elevation estimated from AECOM plan and profile.

Sampling Data | Visual Material Description | Laboratory Testing Results

Depth (ft)	Elevation (ft)	Sample Identification	Blow Count/6 in	Recovery (in) / RQD (%)	Drilling Rate (min./ft.)	Moisture Content (%)	Dry Unit Weight (pcf)	Water Soluble Sulfates (%)	Gravel Content (%)	Sand Content (%)	Fines Content (%)	Liquid Limit (%)	Plasticity Index (%)	UCS (psf)	Swell Pressure (psf)	Swell Percent (%)
	5180															
5	5175															
		3 3	0													
		3 3	8			23	101									
10	5170															
		9 17	10			22	104				94	61	36	10,220		
		17 25	9													
15	5165															
		12 32	14			19	104				44	NV	NP	5,447		
		27 23/2"	10			17	106				16	NV	NP			
20	5160															
		30 25/2"	11			16	109				13	NV	NP			
25	5155															
		13 25	11			25	99				90	62	33	12,161		
30	5150															
		27 23/3"	12													

Soil:
-GEOLOGIC INTERPRETATION-
USCS Classification (group symbol), particle sizes, density or consistency, color, moisture, other descriptions

Rock:
-GEOLOGIC INTERPRETATION-
Bedrock Classification, hardness, weather, color, texture, joint size, other descriptions

FILL
LEAN CLAY with sand (CL), little fine to coarse sand, pale olive to brown, dry to moist, dry on surface, moist 1-2' down, description from auger cuttings and wall of borehole, few organics on surface.

No recovery, medium stiff.

LEAN CLAY with sand (CL), little fine to coarse sand, trace fine gravel, medium stiff, gray to pale olive, moist, iron oxidation. — 8.5 ft.

DENVER FORMATION
Claystone, very soft, slightly weathered, olive gray to brown, moist, iron oxidation.

Interbedded Sandstone and Claystone, very soft, slightly weathered, pale olive, moist, few fine sand, iron oxidation.

Interbedded Sandstone and Siltstone, very soft, moderately weathered, gray to pale olive, mostly fine sand, some silt, moist, few mica, iron oxidation.

As above except moderately to highly weathered, pale olive, mostly fine sand, little silt, iron oxidation.

As above except slightly weathered, weakly cemented, trace iron oxidation.

Claystone, very soft, slightly weathered, greenish gray to dark gray, moist, iron oxidation, white precipitate.

As above except moderately weathered, olive gray.

General Notes:
1) Soil classifications are in general accordance with ASTM D2487 Standard Practice for Classification of Soils for Engineering Purposes (Unified Soil Classification System)
2) The maximum particle size identified in the material description is dependent on sampler dimensions.
3) Additional information is provided on the Boring Log Key.

Groundwater Data:

Date:	Elapsed Time:	Depth to Groundwater:
04/20/21	7 days	15.2 feet
06/21/21	69 days	16.0 feet
07/19/21	97 days	16.4 feet

BORING: TB-1100

Project Name: TWP, Thornton Reach, Ph. 1
Project Number: 19049
Client's Name: AECOM
Owner's Name: City of Thornton
Drilling Subcontractor: Elite Drilling Services
Lithos Representative: J.Halverson
Date(s) of Drilling: 04/13/21

Drilling and Sampling Methods

Drill Make and Model: 48X Mobile
Drilling Method: Hollow Stem Auger (HSA)
Bit Type: Cutting Head
Casing Description: HSA
Hammer Weight (lbs)/Fall (in): 140/30
Sampler Type(s): Mod. Cal.
Sampler Diameter(s): 2.0 inches

LITHOS ENGINEERING

Boring Location: E.E470 offramp @ Quebec St.
Boring Elevation: 5180.0 feet
Notes: Elevation estimated from AECOM plan and profile.

Sampling Data | Visual Material Description | Laboratory Testing Results

Depth (ft)	Elevation (ft)	Sample Identification	Blow Count/6 in	Recovery (in) / RQD (%)	Drilling Rate (min./ft.)	Moisture Content (%)	Dry Unit Weight (pcf)	Water Soluble Sulfates (%)	Gravel Content (%)	Sand Content (%)	Fines Content (%)	Liquid Limit (%)	Plasticity Index (%)	UCS (psf)	Swell Pressure (psf)	Swell Percent (%)
30	5150															
		11 26	12													
35	5145															
40	5140	27 23/3"	10													
45	5135															
50	5130															
55	5125															
60	5120															
65	5115															

Soil:
-GEOLOGIC INTERPRETATION-
USCS Classification (group symbol), particle sizes, density or consistency, color, moisture, other descriptions

Rock:
-GEOLOGIC INTERPRETATION-
Bedrock Classification, hardness, weather, color, texture, joint size, other descriptions

As above except dark gray, olive gray color along discontinuities.

38.5' - Auger grinding.

As above except soft, fresh, grayish dark green. — 41.0 ft.

END OF EXPLORATION

General Notes:
1) Soil classifications are in general accordance with ASTM D2487 Standard Practice for Classification of Soils for Engineering Purposes (Unified Soil Classification System)
2) The maximum particle size identified in the material description is dependent on sampler dimensions.
3) Additional information is provided on the Boring Log Key.

Groundwater Data:

Date:	Elapsed Time:	Depth to Groundwater:
04/20/21	7 days	15.2 feet
06/21/21	69 days	16.0 feet
07/19/21	97 days	16.4 feet

BORING: TB-1200

Project Name: TWP, Thornton Reach, Ph. 1
Project Number: 19049
Client's Name: AECOM
Owner's Name: City of Thornton
Drilling Subcontractor: Authentic Drilling
Lithos Representative: A. Wilkes
Date(s) of Drilling: 09/29/20

Drilling and Sampling Methods

Drill Make and Model: CME 75 Truck Rig
Drilling Method: Hollow Stem Auger (HSA)
Bit Type: Center Bit/Flat
Casing Description: HSA
Hammer Weight (lbs)/Fall (in): 140/30
Sampler Type(s): Mod. Cal.
Sampler Diameter(s): 2.0 inches

LITHOS ENGINEERING

Boring Location: E.E470 offramp @ Quebec St.
Boring Elevation: 5205.0 feet
Notes: Elevation estimated from AECOM plan and profile.

Sampling Data | Visual Material Description | Laboratory Testing Results

Depth (ft)	Elevation (ft)	Sample Identification	Blow Count/6 in	Recovery (in) / RQD (%)	Drilling Rate (min./ft.)	Moisture Content (%)	Dry Unit Weight (pcf)	Water Soluble Sulfates (%)	Gravel Content (%)	Sand Content (%)	Fines Content (%)	Liquid Limit (%)	Plasticity Index (%)	UCS (psf)	Swell Pressure (psf)	Swell Percent (%)
	5205															
5	5200	1 1	0													
10	5195	28 50/5"	6													
15	5190	20 50/4"	6			13	110					56				
20	5185	17 29	6			13						47				
25	5180	20 50/5"	8			11	124							28,227		
		23 50/3"	6													
30	5175	30 26	8													

Soil:
-GEOLOGIC INTERPRETATION-
USCS Classification (group symbol), particle sizes, density or consistency, color, moisture, other descriptions

Rock:
-GEOLOGIC INTERPRETATION-
Bedrock Classification, hardness, weather, color, texture, joint size, other descriptions

SOFT DIG POTHOLE
Sample was not collected. Pea gravel not representative of native grounc conditions.

No recovery. — 6.0 ft.

DENVER FORMATION
Top of bedrock determined from change in drill rig action.

Sandstone, very soft, moderately weathered, gray, mostly fine sand, dry, iron oxidation.

Interbedded Claystone and Sandstone, very soft, slightly weathered, gray, some fine sand, dry.

As above except mostly fine sand, gypsum and calcite veins.

Silty Sandstone, soft, slightly weathered, gray, dry.

Interbedded Sandstone and Claystone, soft, slightly weathered, gray, fine sand, dry, iron oxidation in sandstone.

Silty Sandstone, very soft, moderately weathered, gray to olive gray, dry, iron oxidation.

General Notes:
1) Soil classifications are in general accordance with ASTM D2487 Standard Practice for Classification of Soils for Engineering Purposes (Unified Soil Classification System)
2) The maximum particle size identified in the material description is dependent on sampler dimensions.
3) Additional information is provided on the Boring Log Key.

Groundwater Data:

Date:	Elapsed Time:	Depth to Groundwater:
10/06/20	7 days	45.2 feet
06/21/21	265 days	44.5 feet
07/19/21	293 days	44.4 feet

BORING: TB-1200

Project Name: TWP, Thornton Reach, Ph. 1
Project Number: 19049
Client's Name: AECOM
Owner's Name: City of Thornton
Drilling Subcontractor: Authentic Drilling
Lithos Representative: A. Wilkes
Date(s) of Drilling: 09/29/20

Drilling and Sampling Methods

Drill Make and Model: CME 75 Truck Rig
Drilling Method: Hollow Stem Auger (HSA)
Bit Type: Center Bit/Flat
Casing Description: HSA
Hammer Weight (lbs)/Fall (in): 140/30
Sampler Type(s): Mod. Cal.
Sampler Diameter(s): 2.0 inches

LITHOS ENGINEERING

Boring Location: E.E470 offramp @ Quebec St.
Boring Elevation: 5205.0 feet
Notes: Elevation estimated from AECOM plan and profile.

Sampling Data | Visual Material Description | Laboratory Testing Results

Depth (ft)	Elevation (ft)	Sample Identification	Blow Count/6 in	Recovery (in) / RQD (%)	Drilling Rate (min./ft.)	Moisture Content (%)	Dry Unit Weight (pcf)	Water Soluble Sulfates (%)	Gravel Content (%)	Sand Content (%)	Fines Content (%)	Liquid Limit (%)	Plasticity Index (%)	UCS (psf)	Swell Pressure (psf)	Swell Percent (%)
		5 5	8													
35	5170	12 48	8													
		37 50/3"	8													
40	5165	15 44	8													
		45 50/2"	8													
45	5160	47 50/4"	8													
		24 50/5"	8													
50	5155	30 49	8													
55	5150	39 50/4"	10													
60	5145	23 48	8													
65	5140															

Soil:
-GEOLOGIC INTERPRETATION-
USCS Classification (group symbol), particle sizes, density or consistency, color, moisture, other descriptions

Rock:
-GEOLOGIC INTERPRETATION-
Bedrock Classification, hardness, weather, color, texture, joint size, other descriptions

Claystone, scft, slightly weathered, olive to greenish gray, trace silt, iron oxidation, dry.

As above.

As above expect few silt.

As above.

Sandstone, very soft, slightly weathered, reddish brown, mostly medium sand, trace clay, iron oxidation, dry.

As above except some coarse sand.

As above except olive to brown, mostly coarse sand.

As above except yellowish brown, moist.

As above except moderately weathered, brown, mostly coarse sand, trace silty clay, wet.

Claystone, scft, slightly weathered, greenish black, iron oxidation, dry. — 61.0 ft.

END OF EXPLORATION

General Notes:
1) Soil classifications are in general accordance with ASTM D2487 Standard Practice for Classification of Soils for Engineering Purposes (Unified Soil Classification System)
2) The maximum particle size identified in the material description is dependent on sampler dimensions.
3) Additional information is provided on the Boring Log Key.

Groundwater Data:

Date:	Elapsed Time:	Depth to Groundwater:
10/06/20	7 days	45.2 feet
06/21/21	265 days	44.5 feet
07/19/21	293 days	44.4 feet

	Dry Unit Weight (pcf)	Water Soluble Sulfates (%)	Gravel Content (%)	Sand Content (%)	Fines Content (%)	Liquid Limit (%)	Plasticity Index (%)	UCS (psf)	Swell Pressure (psf)
35	118				47	25			
40	121				67	40	27	27,213	
45	113				22			3,771	
50	113				22			1,721	

BORING: TB-1205

Project Name: TWP, Thornton Reach, Ph. 1
Project Number: 19049
Client's Name: AECOM
Owner's Name: City of Thornton
Drilling Subcontractor: Authentic Drilling
Lithos Representative: A. Wilkes
Date(s) of Drilling: 09/30/20

Drilling and Sampling Methods

Drill Make and Model: CME 75 Truck Rig
Drilling Method: Hollow Stem Auger (HSA)
Bit Type: Center Bit/Flat
Casing Description: HSA
Hammer Weight (lbs)/Fall (in): 140/30
Sampler Type(s): Mod. Cal.
Sampler Diameter(s): 2.0 inches

LITHOS ENGINEERING

Boring Location: 1320'S of E-470 E Offramp
Boring Elevation: 5197.0 feet
Notes: Elevation estimated from AECOM plan and profile.

Sampling Data | Visual Material Description | Laboratory Testing Results

Depth (ft)	Elevation (ft)	Sample Identification	Blow Count/6 in	Recovery (in) / RQD (%)	Drilling Rate (min./ft.)	Moisture Content (%)	Dry Unit Weight (pcf)	Water Soluble Sulfates (%)	Gravel Content (%)	Sand Content (%)	Fines Content (%)	Liquid Limit (%)	Plasticity Index (%)	UCS (psf)	Swell Pressure (psf)	Swell Percent (%)
	5197															
5	5192															
		4 14	6													
		10 22	6													
10	5187															
		5 11	6			23	101				97	62	43	8,737		
		11 31	8			14					16	NV	NP			
15	5182															
		9 50/6"	6													
		11 50/5"	8			11	122				40	38	20			
20	5177															
		50/5"	6													
25	5172															
		36 50/5"	6													
30	5167															

Soil:
-GEOLOGIC INTERPRETATION-
USCS Classification (group symbol), particle sizes, density or consistency, color, moisture, other descriptions

Rock:
-GEOLOGIC INTERPRETATION-
Bedrock Classification, hardness, weather, color, texture, joint size, other descriptions

SOFT DIG POTHOLE
Sample was not collected. Pea gravel not representative of native grounc conditions.

7.5 ft.

DENVER FORMATION
Claystone, ccmpletely weathered, very soft, olive gray, dry, gypsum and black mineral discontinuity infilling.

As above except moderately weathered.

As above except moderately weathered, greenish gray, iron oxidation, dry.

Sandstone, very soft, moderately weathered, greenish gray, trace silt.

Clayey Siltstcne, soft, moderately weathered, olive, iron oxidation, dry.

Clayey Sandstone, very soft, moderately weathered, yellowish brown, mostly fine sand, some clay, dry.

Sandstone, very soft, slightly weathered, yellow, mostly fine sand, dry.

As above except moist.

General Notes:
1) Soil classifications are in general accordance with ASTM D2487 Standard Practice for Classification of Soils for Engineering Purposes (Unified Soil Classification System)
2) The maximum particle size identified in the material description is dependent on sampler dimensions.
3) Additional information is provided on the Boring Log Key.

Groundwater Data:

Date:	Elapsed Time:	Depth to Groundwater:
10/07/20	7 days	31.3 feet
06/21/21	264 days	30.4 feet
07/19/21	292 days	29.2 feet

BORING: TB-1205

Project Name: TWP, Thornton Reach, Ph. 1
Project Number: 19049
Client's Name: AECOM
Owner's Name: City of Thornton
Drilling Subcontractor: Authentic Drilling
Lithos Representative: A. Wilkes
Date(s) of Drilling: 09/30/20

Drilling and Sampling Methods

Drill Make and Model: CME 75 Truck Rig
Drilling Method: Hollow Stem Auger (HSA)
Bit Type: Center Bit/Flat
Casing Description: HSA
Hammer Weight (lbs)/Fall (in): 140/30
Sampler Type(s): Mod. Cal.
Sampler Diameter(s): 2.0 inches

LITHOS ENGINEERING

Boring Location: 1320'S of E-470 E Offramp
Boring Elevation: 5197.0 feet
Notes: Elevation estimated from AECOM plan and profile.

Sampling Data | Visual Material Description | Laboratory Testing Results

Depth (ft)	Elevation (ft)	Sample Identification	Blow Count/6 in	Recovery (in) / RQD (%)	Drilling Rate (min./ft.)	Moisture Content (%)	Dry Unit Weight (pcf)	Water Soluble Sulfates (%)	Gravel Content (%)	Sand Content (%)	Fines Content (%)	Liquid Limit (%)	Plasticity Index (%)	UCS (psf)	Swell Pressure (psf)	Swell Percent (%)
30	5167															
		24 50/5"	6													
35	5162															
40	5157															
45	5152															
50	5147															
55	5142															
60	5137															
65	5132															

Soil:
-GEOLOGIC INTERPRETATION-
USCS Classification (group symbol), particle sizes, density or consistency, color, moisture, other descriptions

Rock:
-GEOLOGIC INTERPRETATION-
Bedrock Classification, hardness, weather, color, texture, joint size, other descriptions

Clayey Siltstcne, soft, slightly weathered, greenish gray, moist. — 36.0 ft.

END OF EXPLORATION

General Notes:
1) Soil classifications are in general accordance with ASTM D2487 Standard Practice for Classification of Soils for Engineering Purposes (Unified Soil Classification System)
2) The maximum particle size identified in the material description is dependent on sampler dimensions.
3) Additional information is provided on the Boring Log Key.

Groundwater Data:

Date:	Elapsed Time:	Depth to Groundwater:
10/07/20	7 days	31.3 feet
06/21/21	264 days	30.4 feet
07/19/21	292 days	29.2 feet

BORING: TB-1210

Project Name: TWP, Thornton Reach, Ph. 1
Project Number: 19049
Client's Name: AECOM
Owner's Name: City of Thornton
Drilling Subcontractor: Kumar and Associates
Lithos Representative: A. Wilkes
Date(s) of Drilling: 09/30/20

Drilling and Sampling Methods

Drill Make and Model: CME 75 Truck Rig
Drilling Method: Hollow Stem Auger (HSA)
Bit Type: Center Bit/Flat
Casing Description: HSA
Hammer Weight (lbs)/Fall (in): 140/30
Sampler Type(s): Mod. Cal.
Sampler Diameter(s): 2.0 inches

LITHOS ENGINEERING

Boring Location: 1570'S of E-470 E Offramp
Boring Elevation: 5199.0 feet
Notes: Elevation estimated from AECOM plan and profile.

Sampling Data | Visual Material Description | Laboratory Testing Results

Depth (ft)	Elevation (ft)	Sample Identification	Blow Count/6 in	Recovery (in) / RQD (%)	Drilling Rate (min./ft.)	Moisture Content (%)	Dry Unit Weight (pcf)	Water Soluble Sulfates (%)	Gravel Content (%)	Sand Content (%)	Fines Content (%)	Liquid Limit (%)	Plasticity Index (%)	UCS (psf)	Swell Pressure (psf)	Swell Percent (%)
	5199															
5	5194															
		7 16	5													
10	5189															
		8 24	6			14	118				83	55	38			
		7 49	6													
15	5184															
		12 35	6			15	115				88	58	41	25,353		
		2 38	8													
20	5179															
		27 50/4"	6			12	120				60	41	27	22,878		
25	5174															
		32 50/2"	6													
30	5169															
		50/1"	44													
35	5164															

Soil:
-GEOLOGIC INTERPRETATION-
USCS Classification (group symbol), particle sizes, density or consistency, color, moisture, other descriptions

Rock:
-GEOLOGIC INTERPRETATION-
Bedrock Classification, hardness, weather, color, texture, joint size, other descriptions

SOFT DIG POTHOLE
Sample was not collected. Pea gravel not representative of native grounc conditions.

7.5 ft.

DENVER FORMATION
Claystone with sand, soft, moderately weathered, olive gray, little fine sand, trace silt, iron oxidation, dry.

As above.

As above except increased silt, white precipitate.

Claystone, scft, moderately weathered, olive, trace silt, iron oxidation, dry.

Siltstone with sand, soft, slightly weathered, olive, little sand, iron oxidation, dry.

Clayey Sandstone, very soft, moderately weathered, light olive, little clay, some iron oxidation.

Sandstone, very soft, moderately weathered, yellowish brown, mostly fine sand, moist.

No recovery, sampler wet.

General Notes:
1) Soil classifications are in general accordance with ASTM D2487 Standard Practice for Classification of Soils for Engineering Purposes (Unified Soil Classification System)
2) The maximum particle size identified in the material description is dependent on sampler dimensions.
3) Additional information is provided on the Boring Log Key.

Groundwater Data:

Date:	Elapsed Time:	Depth to Groundwater:
10/07/20	7 days	30.5 feet
06/21/21	264 days	30.0 feet
07/19/21	292 days	28.9 feet

BORING: TB-1210

Project Name: TWP, Thornton Reach, Ph. 1
Project Number: 19049
Client's Name: AECOM
Owner's Name: City of Thornton
Drilling Subcontractor: Kumar and Associates
Lithos Representative: A. Wilkes
Date(s) of Drilling: 09/30/20

Drilling and Sampling Methods

Drill Make and Model: CME 75 Truck Rig
Drilling Method: Hollow Stem Auger (HSA)
Bit Type: Center Bit/Flat
Casing Description: HSA
Hammer Weight (lbs)/Fall (in): 140/30
Sampler Type(s): Mod. Cal.
Sampler Diameter(s): 2.0 inches

LITHOS ENGINEERING

Boring Location: 1570'S of E-470 E Offramp
Boring Elevation: 5199.0 feet
Notes: Elevation estimated from AECOM plan and profile.

Sampling Data | Visual Material Description | Laboratory Testing Results

Depth (ft)	Elevation (ft)	Sample Identification	Blow Count/6 in	Recovery (in) / RQD (%)	Drilling Rate (min./ft.)	Moisture Content (%)	Dry Unit Weight (pcf)	Water Soluble Sulfates (%)	Gravel Content (%)	Sand Content (%)	Fines Content (%)	Liquid Limit (%)	Plasticity Index (%)	UCS (psf)	Swell Pressure (psf)	Swell Percent (%)
35	5164															
		3.5	8													
40	5159															
45	5154															
50	5149															
55	5144															
60	5139															
65	5134															

Soil:
-GEOLOGIC INTERPRETATION-
USCS Classification (group symbol), particle sizes, density or consistency, color, moisture, other descriptions

Rock:
-GEOLOGIC INTERPRETATION-
Bedrock Classification, hardness, weather, color, texture, joint size, other descriptions

Claystone, scft, slightly weathered, gray, moist. — 36.0 ft.

END OF EXPLORATION

General Notes:
1) Soil classifications are in general accordance with ASTM D2487 Standard Practice for Classification of Soils for Engineering Purposes (Unified Soil Classification System)
2) The maximum particle size identified in the material description is dependent on sampler dimensions.
3) Additional information is provided on the Boring Log Key.

Groundwater Data:

Date:	Elapsed Time:	Depth to Groundwater:
10/07/20	7 days	30.5 feet
06/21/21	264 days	30.0 feet
07/19/21	292 days	28.9 feet

	Dry Unit Weight (pcf)	Water Soluble Sulfates (%)	Gravel Content (%)	Sand Content (%)	Fines Content (%)	Liquid Limit (%)	Plasticity Index (%)	UCS (psf)	Swell Pressure (psf)
35	118				47	25			
40	121				67	40	27	27,213	
45	113				22			3,771	
50	113				22			1,721	

Z:\Shared\S-Drive\Projects\19049 Thornton R\WL - Thornton Reach\Design\Dwgs\Phase I - Boring Logs.dwg

LITHOS ENGINEERING

Thornton WATER PROJECT

TWP SEGMENT A,
PROJECT No. 12-777H5

CLIENT

CITY OF THORNTON
12450 WASHINGTON ST,
THORNTON, CO 80241
720.977.6700 tel 000.000.0000 fax
www.thorntonwaterproject.com

CONSULTANT

LITHOS ENGINEERING
2750 S WADSWORTH BLVD, SUITE D-200
DENVER, COLORADO 80227
T 303.625.9502
WWW.LITHOSENG.COM

ISSUE/REVISION

I/R	DATE	DESCRIPTION
A	10/14/2021	95% PREFINAL SUBMITTAL

VERIFIED SCALES

SCALE: NTS

BAR IS ONE INCH ON ORIGINAL DRAWING
0 1"
IF NOT ONE INCH ON THIS SHEET, ADJUST SCALES ACCORDINGLY

DRAWN BY:	JP
CHKD BY:	LH
CHKD BY:	NS
APPD BY:	NS

PROJECT NUMBER

60619101

SHEET TITLE

TUNNEL BORING LOGS 3

SHEET NUMBER

DT32

BORING: TB-1215

Project Name: TWP, Thornton Reach, Ph. 1
Project Number: 19049
Client's Name: AECOM
Owner's Name: City of Thornton
Drilling Subcontractor: Authentic Drilling
Lithos Representative: A. Wilkes
Date(s) of Drilling: 10/02/20

Drilling and Sampling Methods

Drill Make and Model: CME Truck Rig
Drilling Method: Hollow Stem Auger (HSA)
Bit Type: Center Bit/Flat
Casing Description: HSA
Hammer Weight (lbs)/Fall (in): 140/30
Sampler Type(s): Mod. Cal.
Sampler Diameter(s): 2.0 inches

LITHOS ENGINEERING

Boring Location: 115'NW of 136th and Quebec
Boring Elevation: 5200.0 feet
Notes: Elevation estimated from AECOM plan and profile drawings.

Sampling Data | Visual Material Description | Laboratory Testing Results (In-Situ States; INDEX DATA; Strength & Compressibility)

Soil:
-GEOLOGIC INTERPRETATION-
USCS Classificaton (group symbol), particle sizes, density or consistency, color, moisture, other descriptions

Rock:
-GEOLOGIC INTERPRETATION-
Bedrock Classification, hardness, weather, color, texture, joint size, other descriptions

Elev. (ft)	Sample Identification	Blow Count/6 in	Recovery (in) / RQD (%)	Drilling Rate (min./ft.)	Visual Material Description	Moisture Content (%)	Dry Unit Weight (pcf)	Water Soluble Sulfates (%)	Gravel Content (%)	Sand Content (%)	Fines Content (%)	Liquid Limit (%)	Plasticity Index (%)	UCS (psf)	Swell Pressure (psf)	Swell Percent (%)
					FILL Poorly graded SAND (SP), mostly fine sand, reddish yellow, dry, geologic interpretation from auger cuttings.											
5195					10.0 ft.											
5190		7 9	8		**DENVER FORMATION** Claystone, very soft, highly weathered, gray, dry.	17	107	0.09								
		7 20	6		As above except iron oxidation.	17	112									
5185		7 14	6		As above.											
		8 35	8		Sandstone, very soft, highly weathered, gray, mostly fine sand, iron oxidation, dry.	12	122							16,853		
5180		15 47	6		Interbedded Claystone and Sandstone, very soft, slightly weathered, olive gray, some clay, moist.	15	110				33					
		7 36	6		As above.											
5175		13 47	2		Clayey Sandstone, very soft, moderately weathered, olive yellow, mostly fine to medium sand, little clay, wet.	15	116					46	23			
		7 17	8		Claystone, very soft, moderately weathered, olive gray, moist, iron oxidation.											
5170		15 28	6		As above except dry.											

General Notes:
1) Soil classifications are in general accordance with ASTM D2487 Standard Practice for Classification of Soils for Engineering Purposes (Unified Soil Classification System)
2) The maximum particle size identified in the material description is dependent on sampler dimensions.
3) Additional information is provided on the Boring Log Key.

Groundwater Data:

Date:	Elapsed Time:	Depth to Groundwater:
10/09/20	7 days	21.9 feet
06/21/21	262 days	22.6 feet
07/19/21	290 days	23.0 feet

BORING: TB-1215

Project Name: TWP, Thornton Reach, Ph. 1
Project Number: 19049
Client's Name: AECOM
Owner's Name: City of Thornton
Drilling Subcontractor: Authentic Drilling
Lithos Representative: A. Wilkes
Date(s) of Drilling: 10/02/20

Drilling and Sampling Methods

Drill Make and Model: CME Truck Rig
Drilling Method: Hollow Stem Auger (HSA)
Bit Type: Center Bit/Flat
Casing Description: HSA
Hammer Weight (lbs)/Fall (in): 140/30
Sampler Type(s): Mod. Cal.
Sampler Diameter(s): 2.0 inches

LITHOS ENGINEERING

Boring Location: 115'NW of 136th and Quebec
Boring Elevation: 5200.0 feet
Notes: Elevation estimated from AECOM plan and profile drawings.

Sampling Data | Visual Material Description | Laboratory Testing Results (In-Situ States; INDEX DATA; Strength & Compressibility)

Soil:
-GEOLOGIC INTERPRETATION-
USCS Classificaton (group symbol), particle sizes, density or consistency, color, moisture, other descriptions

Rock:
-GEOLOGIC INTERPRETATION-
Bedrock Classification, hardness, weather, color, texture, joint size, other descriptions

Elev. (ft)	Sample Identification	Blow Count/6 in	Recovery (in) / RQD (%)	Drilling Rate (min./ft.)	Visual Material Description	Moisture Content (%)	Dry Unit Weight (pcf)	Water Soluble Sulfates (%)	Gravel Content (%)	Sand Content (%)	Fines Content (%)	Liquid Limit (%)	Plasticity Index (%)	UCS (psf)	Swell Pressure (psf)	Swell Percent (%)
5150		10 33	8		As above.											
5145		50/6"	6		Sandy Claystone, very soft, moderately weathered, olive gray, some sand, moist, iron oxidation.											
					41.0 ft. **END OF EXPLORATION**											

General Notes:
1) Soil classifications are in general accordance with ASTM D2487 Standard Practice for Classification of Soils for Engineering Purposes (Unified Soil Classification System)
2) The maximum particle size identified in the material description is dependent on sampler dimensions.
3) Additional information is provided on the Boring Log Key.

Groundwater Data:

Date:	Elapsed Time:	Depth to Groundwater:
10/09/20	7 days	21.9 feet
06/21/21	262 days	22.6 feet
07/19/21	290 days	23.0 feet

BORING: TB-1220

Project Name: TWP, Thornton Reach, Ph. 1
Project Number: 19049
Client's Name: AECOM
Owner's Name: City of Thornton
Drilling Subcontractor: Authentic Drilling
Lithos Representative: A. Wilkes
Date(s) of Drilling: 10/05/20

Drilling and Sampling Methods

Drill Make and Model: CME Truck Rig
Drilling Method: Hollow Stem Auger (HSA)
Bit Type: Center Bit/Flat
Casing Description: HSA
Hammer Weight (lbs)/Fall (in): 140/30
Sampler Type(s): Mod. Cal.
Sampler Diameter(s): 2.0 inches

LITHOS ENGINEERING

Boring Location: 140'SW of 136th and Quebec
Boring Elevation: 5190.0 feet
Notes: Elevation estimated from AECOM plan and profile drawings.

Sampling Data | Visual Material Description | Laboratory Testing Results (In-Situ States; INDEX DATA; Strength & Compressibility)

Soil:
-GEOLOGIC INTERPRETATION-
USCS Classificaton (group symbol), particle sizes, density or consistency, color, moisture, other descriptions

Rock:
-GEOLOGIC INTERPRETATION-
Bedrock Classification, hardness, weather, color, texture, joint size, other descriptions

Elev. (ft)	Sample Identification	Blow Count/6 in	Recovery (in) / RQD (%)	Drilling Rate (min./ft.)	Visual Material Description	Moisture Content (%)	Dry Unit Weight (pcf)	Water Soluble Sulfates (%)	Gravel Content (%)	Sand Content (%)	Fines Content (%)	Liquid Limit (%)	Plasticity Index (%)	UCS (psf)	Swell Pressure (psf)	Swell Percent (%)
5190					**SOFT DIG POTHOLE** Sample was not collected. Pea gravel not representative of native grounc conditions.											
5185		3 5	6		**FINE ALLUVIUM** LEAN CLAY with sand (CL), little fine sand, medium stiff, olive yellow, moist, medium plasticity.											
5180		2 3	4		As above except less sand, olive.	17	109									
		3 6	6		**DENVER FORMATION** Sandy Claystone, very soft, completely weathered, some fine sand, light gray with tan and orange, iron oxidation, moist.	9	106							1,947		
5175		4 14	6		Claystone, very soft, moderately weathered, light gray, dry.	17	115							7,844		
5170		5 10	6		As above except some iron oxidation.											
5165		8 25	6		Siltstone, soft, slightly weathered, gray, iron oxidation, dry.											
5160		16 35	8		As above except some gypsum inclusions.											
					31.0 ft. **END OF EXPLORATION**											

General Notes:
1) Soil classifications are in general accordance with ASTM D2487 Standard Practice for Classification of Soils for Engineering Purposes (Unified Soil Classification System)
2) The maximum particle size identified in the material description is dependent on sampler dimensions.
3) Additional information is provided on the Boring Log Key.

Groundwater Data:

Date:	Elapsed Time:	Depth to Groundwater:
10/12/20	7 days	28.1 feet
06/21/21	259 days	24.5 feet
07/19/21	287 days	24.8 feet

BORING: TB-1300

Project Name: TWP, Thornton Reach, Ph. 1
Project Number: 19049
Client's Name: AECOM
Owner's Name: City of Thornton
Drilling Subcontractor: Kumar and Associates
Lithos Representative: Adam Pring
Date(s) of Drilling: 05/01/2020

Drilling and Sampling Methods

Drill Make and Model: CME 55
Drilling Method: Hollow Stem Auger (HSA)
Bit Type: Cutting Head
Casing Description: HSA
Hammer Weight (lbs)/Fall (in): 140/30
Sampler Type(s): Mod. Cal., SPT
Sampler Diameter(s): 2.0 inches, 1.4 inches

LITHOS ENGINEERING

Boring Location: 1400'S of 136th on Quebec
Boring Elevation: 5142.0 feet
Notes: Elevation estimated from AECOM plan and profile.

Sampling Data | Visual Material Description | Laboratory Testing Results (In-Situ States; INDEX DATA; Strength & Compressibility)

Soil:
-GEOLOGIC INTERPRETATION-
USCS Classificaton (group symbol), particle sizes, density or consistency, color, moisture, other descriptions

Rock:
-GEOLOGIC INTERPRETATION-
Bedrock Classification, hardness, weather, color, texture, joint size, other descriptions

Elev. (ft)	Sample Identification	Blow Count/6 in	Recovery (in) / RQD (%)	Drilling Rate (min./ft.)	Visual Material Description	Moisture Content (%)	Dry Unit Weight (pcf)	Water Soluble Sulfates (%)	Gravel Content (%)	Sand Content (%)	Fines Content (%)	Liquid Limit (%)	Plasticity Index (%)	UCS (psf)	Swell Pressure (psf)	Swell Percent (%)
					SOFT DIG POTHOLE Sample was not collected. Pea gravel not representative of native grounc conditions.											
5140		3 5	0		No recovery, pea gravel.											
					6.0 ft. **DENVER FORMATION** Top of bedrock determined from change in drill rig action.											
5135		7 14	4		Claystone, very soft, highly weathered, brown, iron oxidation.	15	119				84	36	23			
5130		50/ 11"	8		As above except medium gray, less iron oxidation.											
5125		50/8"	8		As above except moderately weathered, light and medium gray.											
		50/7"	4		Siltstone, very soft, slightly weathered, medium gray, iron oxidation.											
5120		50/6"	4		Siltstone with sand, very soft, moderately weathered, mottled dark gray to light gray to light brown, little fine sand, wet.											
		50/6"	4		Sandstone, very soft, completely weathered, light brown and tan, trace fines, wet, very thinly bedded.											
5115		50/6"	3		As above except tan to light gray.											
		17 45 50/6"	18		Silty Claystone, very soft, highly weathered, medium gray.											
5110																

General Notes:
1) Soil classifications are in general accordance with ASTM D2487 Standard Practice for Classification of Soils for Engineering Purposes (Unified Soil Classification System)
2) The maximum particle size identified in the material description is dependent on sampler dimensions.
3) Additional information is provided on the Boring Log Key.

Groundwater Data:

Date:	Elapsed Time:	Depth to Groundwater:
06/08/20	7 days	22.0 feet
06/21/21	416 days	22.3 feet
07/19/21	444 days	22.5 feet

BORING: TB-1300

Project Name: TWP, Thornton Reach, Ph. 1
Project Number: 19049
Client's Name: AECOM
Owner's Name: City of Thornton
Drilling Subcontractor: Kumar and Associates
Lithos Representative: Adam Pring
Date(s) of Drilling: 05/01/2020

Drilling and Sampling Methods

Drill Make and Model: CME 55
Drilling Method: Hollow Stem Auger (HSA)
Bit Type: Cutting Head
Casing Description: HSA
Hammer Weight (lbs)/Fall (in): 140/30
Sampler Type(s): Mod. Cal., SPT
Sampler Diameter(s): 2.0 inches, 1.4 inches

LITHOS ENGINEERING

Boring Location: 1400'S of 136th on Quebec
Boring Elevation: 5142.0 feet
Notes: Elevation estimated from AECOM plan and profile.

Sampling Data | Visual Material Description | Laboratory Testing Results (In-Situ States; INDEX DATA; Strength & Compressibility)

Soil:
-GEOLOGIC INTERPRETATION-
USCS Classificaton (group symbol), particle sizes, density or consistency, color, moisture, other descriptions

Rock:
-GEOLOGIC INTERPRETATION-
Bedrock Classification, hardness, weather, color, texture, joint size, other descriptions

Elev. (ft)	Sample Identification	Blow Count/6 in	Recovery (in) / RQD (%)	Drilling Rate (min./ft.)	Visual Material Description	Moisture Content (%)	Dry Unit Weight (pcf)	Water Soluble Sulfates (%)	Gravel Content (%)	Sand Content (%)	Fines Content (%)	Liquid Limit (%)	Plasticity Index (%)	UCS (psf)	Swell Pressure (psf)	Swell Percent (%)
		50/4"	4		As above except soft, moderately weathered.											
5100		50/7"	8		Claystone, very soft, slightly weathered, dark and blue gray.	17	111				100	59	36			
		50/4"	4		As above.	18	113				99	44	23	11,893		
5095		50/5	4		As above except fresh, trace silt, lignite inclusions.											
5090		50/3"	4		As above.											
5085		50/4"	4		As above except slightly weathered.											
					51.0 ft. **END OF EXPLORATION**											

General Notes:
1) Soil classifications are in general accordance with ASTM D2487 Standard Practice for Classification of Soils for Engineering Purposes (Unified Soil Classification System)
2) The maximum particle size identified in the material description is dependent on sampler dimensions.
3) Additional information is provided on the Boring Log Key.

Groundwater Data:

Date:	Elapsed Time:	Depth to Groundwater:
06/08/20	7 days	22.0 feet
06/21/21	416 days	22.3 feet
07/19/21	444 days	22.5 feet

BORING: TB-1400

Project Name: TWP, Thornton Reach, Ph. 1
Project Number: 19049
Client's Name: AECOM
Owner's Name: City of Thornton
Drilling Subcontractor: Kumar and Associates
Lithos Representative: Adam Pring
Date(s) of Drilling: 04/27/2020

Drilling and Sampling Methods

Drill Make and Model: CME 55
Drilling Method: Hollow Stem Auger, HQ Core
Bit Type: Cutting Head
Casing Description: Auger, HQ Core Barrel
Hammer Weight (lbs)/Fall (in): 140/30
Sampler Type(s): Modified California, HQ Rock
Sampler Diameter(s): 2.0 inches, 2.5 inches

LITHOS ENGINEERING

Boring Location: 530'N of 132nd on Quebec
Boring Elevation: 5145.0 feet
Notes: Elevation estimated from AECOM plan and profile.

Sampling Data | Visual Material Description | Laboratory Testing Results (In-Situ States; INDEX DATA; Strength & Compressibility)

Soil:
-GEOLOGIC INTERPRETATION-
USCS Classificaton (group symbol), particle sizes, density or consistency, color, moisture, other descriptions

Rock:
-GEOLOGIC INTERPRETATION-
Bedrock Classification, hardness, weather, color, texture, joint size, other descriptions

Elev. (ft)	Sample Identification	Blow Count/6 in	Recovery (in) / RQD (%)	Drilling Rate (min./ft.)	Visual Material Description	Moisture Content (%)	Dry Unit Weight (pcf)	Water Soluble Sulfates (%)	Gravel Content (%)	Sand Content (%)	Fines Content (%)	Liquid Limit (%)	Plasticity Index (%)	UCS (psf)	Swell Pressure (psf)	Swell Percent (%)
					SOFT DIG POTHOLE Sample was not collected. Pea gravel not representative of native grounc conditions.											
5140		5 5	2		5.0 ft. **FINE ALLUVIUM** Sandy LEAN CLAY (CL), some medium sand, stiff, light brown to dark brown, moist.											
		8 11	4		8.0 ft. **DENVER FORMATION** Claystone, very soft, completely weathered, light gray to brown.											
5135		11 22	4		As above except highly weathered, gray, trace lignite, calcite.	20	107				96			9,709		
		15 26	8		As above except moderately weathered.											
5130		25 26	6		As above.	22	104				100			12,307		
		16 32	8		As above except silt laminations, trace lignite.											
5125		17 26	8		As above except dark gray, mottled with lignite.											
		50/6"	8		Sandstone, soft, moderately weathered, tanish brown, mostly fine to medium sand, claystone inclusions < 1cm, claystone laminations. Claystone, very soft, highly weathered, dark gray.											
5120		17 0	2.00		Sandstone, very soft, completely weathered, dark tanish brown, mostly medium sand.											
5115		12 26	1.20		Claystone, moderately weathered, very soft, gray, very fine grained, iron oxidation.											

General Notes:
1) Soil classifications are in general accordance with ASTM D2487 Standard Practice for Classification of Soils for Engineering Purposes (Unified Soil Classification System)
2) The maximum particle size identified in the material description is dependent on sampler dimensions.
3) Additional information is provided on the Boring Log Key.

Groundwater Data:

Date:	Elapsed Time:	Depth to Groundwater:
05/04/20	7 days	DNE
06/21/21	420 days	DNE
07/19/21	448 days	DNE

BORING: TB-1400

Project Name: TWP, Thornton Reach, Ph. 1
Project Number: 19049
Client's Name: AECOM
Owner's Name: City of Thornton
Drilling Subcontractor: Kumar and Associates
Lithos Representative: Adam Pring
Date(s) of Drilling: 04/27/2020

Drilling and Sampling Methods

Drill Make and Model: CME 55
Drilling Method: Hollow Stem Auger, HQ Core
Bit Type: Cutting Head
Casing Description: Auger, HQ Core Barrel
Hammer Weight (lbs)/Fall (in): 140/30
Sampler Type(s): Modified California, HQ Rock
Sampler Diameter(s): 2.0 inches, 2.5 inches

LITHOS ENGINEERING

Boring Location: 530'N of 132nd on Quebec
Boring Elevation: 5145.0 feet
Notes: Elevation estimated from AECOM plan and profile.

Sampling Data | Visual Material Description | Laboratory Testing Results (In-Situ States; INDEX DATA; Strength & Compressibility)

Soil:
-GEOLOGIC INTERPRETATION-
USCS Classificaton (group symbol), particle sizes, density or consistency, color, moisture, other descriptions

Rock:
-GEOLOGIC INTERPRETATION-
Bedrock Classification, hardness, weather, color, texture, joint size, other descriptions

Elev. (ft)	Sample Identification	Blow Count/6 in	Recovery (in) / RQD (%)	Drilling Rate (min./ft.)	Visual Material Description	Moisture Content (%)	Dry Unit Weight (pcf)	Water Soluble Sulfates (%)	Gravel Content (%)	Sand Content (%)	Fines Content (%)	Liquid Limit (%)	Plasticity Index (%)	UCS (psf)	Swell Pressure (psf)	Swell Percent (%)
5110		60 100	2.75		As above except soft, slightly weathered, dark gray, little iron oxidation.	16	115							11,603		
5105		59 93	2.83		As above except medium gray.											
5100		62 100	2.60		As above except soft, fresh, silty.	24	102							45,392		
					48.0 ft. **END OF EXPLORATION**											
5095																
5090																
5085																
5080																

General Notes:
1) Soil classifications are in general accordance with ASTM D2487 Standard Practice for Classification of Soils for Engineering Purposes (Unified Soil Classification System)
2) The maximum particle size identified in the material description is dependent on sampler dimensions.
3) Additional information is provided on the Boring Log Key.

Groundwater Data:

Date:	Elapsed Time:	Depth to Groundwater:
05/04/20	7 days	DNE
06/21/21	420 days	DNE
07/19/21	448 days	DNE

LITHOS ENGINEERING

Thornton WATER PROJECT

TWP SEGMENT A,
PROJECT No. 12-777H5

CLIENT

CITY OF THORNTON
12450 WASHINGTON ST,
THORNTON, CO 80241
720.977.6700 tel 000.000.0000 fax
www.thorntonwaterproject.com

CONSULTANT

LITHOS ENGINEERING
2750 S WADSWORTH BLVD, SUITE D-200
DENVER, COLORADO 80227
T 303.625.9502
WWW.LITHOSENG.COM

ISSUE/REVISION

I/R	DATE	DESCRIPTION
A	10/14/2021	95% PREFINAL SUBMITTAL

VERIFIED SCALES

SCALE: NTS

BAR IS ONE INCH ON ORIGINAL DRAWING
0 1"
IF NOT ONE INCH ON THIS SHEET, ADJUST SCALES ACCORDINGLY

DRAWN BY:	JP
CHKD BY:	LH
CHKD BY:	NS
APPD BY:	NS

PROJECT NUMBER

60619101

SHEET TITLE

TUNNEL BORING LOGS 4

SHEET NUMBER

DT33

BORING: TB-1500

Project Name: TWP, Thornton Reach, Ph. 1
Project Number: 19049
Client's Name: AECOM
Owner's Name: City of Thornton
Drilling Subcontractor: Elite Drilling Services
Lithos Representative: A. Wilkes
Date(s) of Drilling: 12/04/20

Drilling and Sampling Methods

Drill Make and Model: CME Buggy Rig
Drilling Method: Hollow Stem Auger (HSA)
Bit Type: Cutting Head
Casing Description: HSA
Hammer Weight (lbs)/Fall (in): 140/30
Sampler Type(s): Mod. Cal.
Sampler Diameter(s): 2.0 inches

LITHOS ENGINEERING

Boring Location: 690'NNE of 130th & Quebec
Boring Elevation: 5104.0 feet
Notes: Elevation estimated from AECOM plan and profile drawings.

Sampling Data | Visual Material Description | Laboratory Testing Results

Soil:
-GEOLOGIC INTERPRETATION-
USCS Classification (group symbol), particle sizes, density or consistency, color, moisture, other descriptions

Rock:
-GEOLOGIC INTERPRETATION-
Bedrock Classification, hardness, weather, color, texture, joint size, other descriptions

Depth (ft)	Elevation (ft)	Sample Identification	Blow Count/6 in	Recovery (in) / RQD (%)	Drilling Rate (min./ft.)	Visual Material Description	Moisture Content (%)	Dry Unit Weight (pcf)	Water Soluble Sulfates (%)	Gravel Content (%)	Sand Content (%)	Fines Content (%)	Liquid Limit (%)	Plasticity Index (%)	UCS (psf)	Swell Pressure (psf)	Swell Percent (%)
						FILL LEAN CLAY with gravel and cobbles (CL), little gravel and cobbles, trace angular granite cobbles, moist, geologic interpretation from auger cuttings.											
8.0 ft.																	
						DENVER FORMATION Top of bedrock determined by change in drill rig action.											
						Sandstone, very soft, completely weathered, olive yellow, mica, moist.											
		26 50/3"	5														
		28 50/4"	6			As above except gray with yellow lineations, mostly fine sand, wet.											
		33 50/5"	6			As above except mostly coarse sand.	14	105				7	NV	NP			
		42 50/5"	6			Clayey Sandstone, very soft, compitely weathered, gray with yellow lineations, mostly fine to medium sand, some clay, wet											
		13 28	7			Claystone, very soft, highly weathered, dark gray, some iron oxidation, moist, medium plasticity.	19	112				98	53	35	14,860		
		19 31	6			As above.											
		28 50/3	7			Sandy Claystone, soft, fresh, gray, some fine sand, massive, dry.	16	116				62	46	20	10,060		
		29 40	6			Silty Claystone, soft, fresh, gray, some silt, massive, dry.											

Groundwater Depth / Monitoring Well Configuration

General Notes:
1) Soil classifications are in general accordance with ASTM D2487 Standard Practice for Classification of Soils for Engineering Purposes (Unified Soil Classification System)
2) The maximum particle size identified in the material description is dependent on sampler dimensions.
3) Additional information is provided on the Boring Log Key.

Groundwater Data:

Date:	Elapsed Time:	Depth to Groundwater:
12/11/20	7 days	10.9 feet
06/21/21	199 days	9.9 feet
07/19/21	227 days	8.8 feet

BORING: TB-1500

Project Name: TWP, Thornton Reach, Ph. 1
Project Number: 19049
Client's Name: AECOM
Owner's Name: City of Thornton
Drilling Subcontractor: Elite Drilling Services
Lithos Representative: A. Wilkes
Date(s) of Drilling: 12/04/20

Drilling and Sampling Methods

Drill Make and Model: CME Buggy Rig
Drilling Method: Hollow Stem Auger (HSA)
Bit Type: Cutting Head
Casing Description: HSA
Hammer Weight (lbs)/Fall (in): 140/30
Sampler Type(s): Mod. Cal.
Sampler Diameter(s): 2.0 inches

LITHOS ENGINEERING

Boring Location: 690'NNE of 130th & Quebec
Boring Elevation: 5104.0 feet
Notes: Elevation estimated from AECOM plan and profile drawings.

Sampling Data | Visual Material Description | Laboratory Testing Results

Soil:
-GEOLOGIC INTERPRETATION-
USCS Classification (group symbol), particle sizes, density or consistency, color, moisture, other descriptions

Rock:
-GEOLOGIC INTERPRETATION-
Bedrock Classification, hardness, weather, color, texture, joint size, other descriptions

Depth (ft)	Elevation (ft)	Sample Identification	Blow Count/6 in	Recovery (in) / RQD (%)	Drilling Rate (min./ft.)	Visual Material Description	Moisture Content (%)	Dry Unit Weight (pcf)	Water Soluble Sulfates (%)	Gravel Content (%)	Sand Content (%)	Fines Content (%)	Liquid Limit (%)	Plasticity Index (%)	UCS (psf)	Swell Pressure (psf)	Swell Percent (%)
						As above except increased silt content.											
			14 38	6		As above.											
			50/6"	6		Siltstone, very soft, fresh, gray, dry, massive.											
41.0 ft.						**END OF EXPLORATIONS**											

Groundwater Depth / Monitoring Well Configuration

General Notes:
1) Soil classifications are in general accordance with ASTM D2487 Standard Practice for Classification of Soils for Engineering Purposes (Unified Soil Classification System)
2) The maximum particle size identified in the material description is dependent on sampler dimensions.
3) Additional information is provided on the Boring Log Key.

Groundwater Data:

Date:	Elapsed Time:	Depth to Groundwater:
12/11/20	7 days	10.9 feet
06/21/21	199 days	9.9 feet
07/19/21	227 days	8.8 feet

BORING: TB-1600

Project Name: TWP, Thornton Reach, Ph. 1
Project Number: 19049
Client's Name: AECOM
Owner's Name: City of Thornton
Drilling Subcontractor: Authentic Drilling
Lithos Representative: Wes Hogan
Date(s) of Drilling: 12/21/20

Drilling and Sampling Methods

Drill Make and Model: CME-55/300
Drilling Method: Hollow Stem Auger (HSA)
Bit Type: Cutting Head
Casing Description: HSA
Hammer Weight (lbs)/Fall (in): 140/30
Sampler Type(s): Mod. Cal.
Sampler Diameter(s): 2.0 inches

LITHOS ENGINEERING

Boring Location: 490'NbyE of 130th & Quebec
Boring Elevation: 5117.0 feet
Notes: Elevation estimated from AECOM plan and profile drawings.

Sampling Data | Visual Material Description | Laboratory Testing Results

Soil:
-GEOLOGIC INTERPRETATION-
USCS Classification (group symbol), particle sizes, density or consistency, color, moisture, other descriptions

Rock:
-GEOLOGIC INTERPRETATION-
Bedrock Classification, hardness, weather, color, texture, joint size, other descriptions

Depth (ft)	Elevation (ft)	Sample Identification	Blow Count/6 in	Recovery (in) / RQD (%)	Drilling Rate (min./ft.)	Visual Material Description	Moisture Content (%)	Dry Unit Weight (pcf)	Water Soluble Sulfates (%)	Gravel Content (%)	Sand Content (%)	Fines Content (%)	Liquid Limit (%)	Plasticity Index (%)	UCS (psf)	Swell Pressure (psf)	Swell Percent (%)
						SOFT DIG POTHOLE Sample was not collected. Pea gravel not representative of native grounc conditions.											
			6 8														
10.0 ft.						**FINE ALLUVIUM** Sandy LEAN CLAY with gravel (CL), little sand, little fine gravel, stiff, olive brown, dry, maximum particle size 1/2".											
			6 10			LEAN CLAY with sand (CL), little sand, very stiff, olive, dry.											
			5 7			As above except some sand.	18	110				70	45	30	5,390		
25.0 ft.						**COARSE ALLUVIUM** Poorly graded SAND with silt (SP-SM), medium dense, pale olive, wet.											
27.5 ft.			10 17														
			13 19			**DENVER FORMATION** Claystone, scft, highly weathered, gray, dry, iron oxidation.											
			11 16			As above.	22	105				97	62	38	18,720		

Groundwater Depth / Monitoring Well Configuration

General Notes:
1) Soil classifications are in general accordance with ASTM D2487 Standard Practice for Classification of Soils for Engineering Purposes (Unified Soil Classification System)
2) The maximum particle size identified in the material description is dependent on sampler dimensions.
3) Additional information is provided on the Boring Log Key.

Groundwater Data:

Date:	Elapsed Time:	Depth to Groundwater:
12/28/20	7 days	20.6 feet
06/21/21	182 days	19.3 feet
07/19/21	210 days	18.8 feet

BORING: TB-1600

Project Name: TWP, Thornton Reach, Ph. 1
Project Number: 19049
Client's Name: AECOM
Owner's Name: City of Thornton
Drilling Subcontractor: Authentic Drilling
Lithos Representative: Wes Hogan
Date(s) of Drilling: 12/21/20

Drilling and Sampling Methods

Drill Make and Model: CME-55/300
Drilling Method: Hollow Stem Auger (HSA)
Bit Type: Cutting Head
Casing Description: HSA
Hammer Weight (lbs)/Fall (in): 140/30
Sampler Type(s): Mod. Cal.
Sampler Diameter(s): 2.0 inches

LITHOS ENGINEERING

Boring Location: 490'NbyE of 130th & Quebec
Boring Elevation: 5117.0 feet
Notes: Elevation estimated from AECOM plan and profile drawings.

Sampling Data | Visual Material Description | Laboratory Testing Results

Soil:
-GEOLOGIC INTERPRETATION-
USCS Classification (group symbol), particle sizes, density or consistency, color, moisture, other descriptions

Rock:
-GEOLOGIC INTERPRETATION-
Bedrock Classification, hardness, weather, color, texture, joint size, other descriptions

Depth (ft)	Elevation (ft)	Sample Identification	Blow Count/6 in	Recovery (in) / RQD (%)	Drilling Rate (min./ft.)	Visual Material Description	Moisture Content (%)	Dry Unit Weight (pcf)	Water Soluble Sulfates (%)	Gravel Content (%)	Sand Content (%)	Fines Content (%)	Liquid Limit (%)	Plasticity Index (%)	UCS (psf)	Swell Pressure (psf)	Swell Percent (%)
			9 9			As above except highly weathered.											
			12 21			As above except medium.											
			20 50			As above.											
			13 34			Interbedded Claystone and Siltstone, soft, highly weathered, light olive, dry.											
			28 24			Siltstone, medium, moderately weathered, dark gray, dry.											
			30 50			As above except medium dark gray.											
			50/6"			As above.											
			50/7"			As above except slightly weathered.											
56.0 ft.						**END OF EXPLORATION**											

Groundwater Depth / Monitoring Well Configuration

General Notes:
1) Soil classifications are in general accordance with ASTM D2487 Standard Practice for Classification of Soils for Engineering Purposes (Unified Soil Classification System)
2) The maximum particle size identified in the material description is dependent on sampler dimensions.
3) Additional information is provided on the Boring Log Key.

Groundwater Data:

Date:	Elapsed Time:	Depth to Groundwater:
12/28/20	7 days	20.6 feet
06/21/21	182 days	19.3 feet
07/19/21	210 days	18.8 feet

BORING: TB-1605

Project Name: TWP, Thornton Reach, Ph. 1
Project Number: 19049
Client's Name: AECOM
Owner's Name: City of Thornton
Drilling Subcontractor: Elite Drilling Services
Lithos Representative: J. Halverson
Date(s) of Drilling: 05/06/21

Drilling and Sampling Methods

Drill Make and Model: CME 75
Drilling Method: Hollow Stem Auger (HSA)
Bit Type: Cutting Head
Casing Description: Hollow Stem Auger
Hammer Weight (lbs)/Fall (in): 140/30
Sampler Type(s): Mod. Cal.
Sampler Diameter(s): 2.0 inches

LITHOS ENGINEERING

Boring Location: 45'N of 128th on SB Quebec
Boring Elevation: 5124.0 feet
Notes: Elevation estimated from AECOM plan and profile drawings.

Sampling Data | Visual Material Description | Laboratory Testing Results

Soil:
-GEOLOGIC INTERPRETATION-
USCS Classification (group symbol), particle sizes, density or consistency, color, moisture, other descriptions

Rock:
-GEOLOGIC INTERPRETATION-
Bedrock Classification, hardness, weather, color, texture, joint size, other descriptions

Depth (ft)	Elevation (ft)	Sample Identification	Blow Count/6 in	Recovery (in) / RQD (%)	Drilling Rate (min./ft.)	Visual Material Description	Moisture Content (%)	Dry Unit Weight (pcf)	Water Soluble Sulfates (%)	Gravel Content (%)	Sand Content (%)	Fines Content (%)	Liquid Limit (%)	Plasticity Index (%)	UCS (psf)	Swell Pressure (psf)	Swell Percent (%)
						PAVEMENT SECTION Asphalt: 10.5-inches Base Course: 0-inches											
0.9 ft.						**FINE ALLUVIUM** LEAN CLAY (CL), few medium to coarse sand, brown, moist, high plasticity, description based on auger cuttings.											
			5 10	9		Sandy LEAN CLAY (CL), some fine sand, stiff, olive yellow, moist, some white precipitate.	17	110				65	36	19			
3.7 ft.																	
			6 9	9		As above except few fine to coarse gravel, maximum particle size 2.0-inches, little white precipitate.	13	112									
			6 15	8		As above except some fine to medium sand, few fine gravel, very stiff, reddish brown, dry to moist, medium plasticity, trace white precipitate, maximum particle size 0.5-inches.	15	117				58	36	20	11,819		
			3 6	6		LEAN CLAY iCL), few fine sand, stiff, olive yellow, dry to moist, some white precipitate.											
			6 10	8		Sandy LEAN CLAY (CL), some to mostly fine sand, very stiff, moist, little white precipitate, medium plasticity.	13	118		0	47	53	29	17	9,509		
			4 6	6		As above except stiff, yellowish olive brown, few white precipitate.											
			5 4	6		As above except stiff, high plasticity, trace white precipitate.	17	110									
			4 4	12		As above except medium stiff, medium to high plasticity.											
			5 6	12		LEAN CLAY iCL), few fine sand, stiff, yellowish brown, wet, coarse gravel in sampler shoe, maximum particle size 0.75-inches.											
			5 8	12		Sandy LEAN CLAY with gravel (CL), some fine to coarse sand, little fine to coarse gravel, stiff, olive yellow, wet, high plasticity.											

Groundwater Depth / Monitoring Well Configuration

General Notes:
1) Soil classifications are in general accordance with ASTM D2487 Standard Practice for Classification of Soils for Engineering Purposes (Unified Soil Classification System)
2) The maximum particle size identified in the material description is dependent on sampler dimensions.
3) Additional information is provided on the Boring Log Key.

Groundwater Data:

Date:	Elapsed Time:	Depth to Groundwater:
06/12/21	6 days	24.9 feet
06/21/21	46 days	8.7 feet
07/19/21	74 days	9.0 feet

BORING: TB-1605

Project Name: TWP, Thornton Reach, Ph. 1
Project Number: 19049
Client's Name: AECOM
Owner's Name: City of Thornton
Drilling Subcontractor: Elite Drilling Services
Lithos Representative: J. Halverson
Date(s) of Drilling: 05/06/21

Drilling and Sampling Methods

Drill Make and Model: CME 75
Drilling Method: Hollow Stem Auger (HSA)
Bit Type: Cutting Head
Casing Description: Hollow Stem Auger
Hammer Weight (lbs)/Fall (in): 140/30
Sampler Type(s): Mod. Cal.
Sampler Diameter(s): 2.0 inches

LITHOS ENGINEERING

Boring Location: 45'N of 128th on SB Quebec
Boring Elevation: 5124.0 feet
Notes: Elevation estimated from AECOM plan and profile drawings.

Sampling Data | Visual Material Description | Laboratory Testing Results

Soil:
-GEOLOGIC INTERPRETATION-
USCS Classification (group symbol), particle sizes, density or consistency, color, moisture, other descriptions

Rock:
-GEOLOGIC INTERPRETATION-
Bedrock Classification, hardness, weather, color, texture, joint size, other descriptions

Depth (ft)	Elevation (ft)	Sample Identification	Blow Count/6 in	Recovery (in) / RQD (%)	Drilling Rate (min./ft.)	Visual Material Description	Moisture Content (%)	Dry Unit Weight (pcf)	Water Soluble Sulfates (%)	Gravel Content (%)	Sand Content (%)	Fines Content (%)	Liquid Limit (%)	Plasticity Index (%)	UCS (psf)	Swell Pressure (psf)	Swell Percent (%)
			5 8	12		**DENVER FORMATION** Claystone, very soft, slightly weathered, olive to blueish gray, moist, iron oxidation, white precipitate.											
			4 14	10		As above except olive gray, no white precipitate.											
			13 20	10		As above except greenish gray, lentite stringers, iron oxidation.											
40.9 ft.						**END OF EXPLORATION**											

Groundwater Depth / Monitoring Well Configuration

General Notes:
1) Soil classifications are in general accordance with ASTM D2487 Standard Practice for Classification of Soils for Engineering Purposes (Unified Soil Classification System)
2) The maximum particle size identified in the material description is dependent on sampler dimensions.
3) Additional information is provided on the Boring Log Key.

Groundwater Data:

Date:	Elapsed Time:	Depth to Groundwater:
06/12/21	6 days	24.9 feet
06/21/21	46 days	8.7 feet
07/19/21	74 days	9.0 feet

BORING: TB-1610

Project Name: TWP, Thornton Reach, Ph. 1
Project Number: 19049
Client's Name: AECOM
Owner's Name: City of Thornton
Drilling Subcontractor: Elite Drilling Services
Lithos Representative: J. Halverson
Date(s) of Drilling: 05/05/21

Drilling and Sampling Methods

Drill Make and Model: CME 75
Drilling Method: Hollow Stem Auger (HSA)
Bit Type: Cutting Head
Casing Description: HSA
Hammer Weight (lbs)/Fall (in): 140/30
Sampler Type(s): Mod. Cal., SPT
Sampler Diameter(s): 2.0 inches, 1.4 inches

LITHOS ENGINEERING

Boring Location: SW corner of 128th on Quebec
Boring Elevation: 5124.0 feet
Notes: Elevation estimated from AECOM plan and profile drawings.

Sampling Data | Visual Material Description | Laboratory Testing Results

Soil:
-GEOLOGIC INTERPRETATION-
USCS Classification (group symbol), particle sizes, density or consistency, color, moisture, other descriptions

Rock:
-GEOLOGIC INTERPRETATION-
Bedrock Classification, hardness, weather, color, texture, joint size, other descriptions

Depth (ft)	Elevation (ft)	Sample Identification	Blow Count/6 in	Recovery (in) / RQD (%)	Drilling Rate (min./ft.)	Visual Material Description	Moisture Content (%)	Dry Unit Weight (pcf)	Water Soluble Sulfates (%)	Gravel Content (%)	Sand Content (%)	Fines Content (%)	Liquid Limit (%)	Plasticity Index (%)	UCS (psf)	Swell Pressure (psf)	Swell Percent (%)
						TOPSOIL LEAN CLAY iCL), few fine to medium sand, brown, moist, few organics at surface.											
1.0 ft.						**FINE ALLUVIUM**											
			7 12	6		Sandy LEAN CLAY (CL), some medium sand, very stiff, yellowish brown, dry to moist, medium plasticity.	14	114									
			7 18	8		As above.											
			7 7	7		As above except stiff.											
			4 5	8		As above except some fine sand, moist.	14	110				61	33	18	8,009		
			4 6	7		As above except some to mostly fine sand, stiff.	13	113		0	47	53	27	14	7,833		
20.0 ft.						**COARSE ALLUVIUM** Silty SAND (SM), mostly fine sand, some silt, loose, yellowish brown, moist.	10	108				38	NV	NP			
22.5 ft.			4 5	8		**FINE ALLUVIUM** LEAN CLAY iCL), trace fine sand, stiff, yellowish brown, moist, high plasticity.											
			7 8	7		As above.											
			5 7	7		LEAN CLAY with sand (CL), little fine sand, medium stiff, pale olive, moist, high plasticity.											
			3 4	11		As above.											
			4 4	12													

Groundwater Depth / Monitoring Well Configuration

General Notes:
1) Soil classifications are in general accordance with ASTM D2487 Standard Practice for Classification of Soils for Engineering Purposes (Unified Soil Classification System)
2) The maximum particle size identified in the material description is dependent on sampler dimensions.
3) Additional information is provided on the Boring Log Key.

Groundwater Data:

Date:	Elapsed Time:	Depth to Groundwater:
05/12/21	7 days	DNE
06/21/21	47 days	N/A
07/19/21	75 days	N/A

BORING: TB-1610

Project Name: TWP, Thornton Reach, Ph. 1
Project Number: 19049
Client's Name: AECOM
Owner's Name: City of Thornton
Drilling Subcontractor: Elite Drilling Services
Lithos Representative: J. Halverson
Date(s) of Drilling: 05/05/21

Drilling and Sampling Methods

Drill Make and Model: CME 75
Drilling Method: Hollow Stem Auger (HSA)
Bit Type: Cutting Head
Casing Description: HSA
Hammer Weight (lbs)/Fall (in): 140/30
Sampler Type(s): Mod. Cal., SPT
Sampler Diameter(s): 2.0 inches, 1.4 inches

LITHOS ENGINEERING

Boring Location: SW corner of 128th on Quebec
Boring Elevation: 5124.0 feet
Notes: Elevation estimated from AECOM plan and profile drawings.

Sampling Data | Visual Material Description | Laboratory Testing Results

Soil:
-GEOLOGIC INTERPRETATION-
USCS Classification (group symbol), particle sizes, density or consistency, color, moisture, other descriptions

Rock:
-GEOLOGIC INTERPRETATION-
Bedrock Classification, hardness, weather, color, texture, joint size, other descriptions

Depth (ft)	Elevation (ft)	Sample Identification	Blow Count/6 in	Recovery (in) / RQD (%)	Drilling Rate (min./ft.)	Visual Material Description	Moisture Content (%)	Dry Unit Weight (pcf)	Water Soluble Sulfates (%)	Gravel Content (%)	Sand Content (%)	Fines Content (%)	Liquid Limit (%)	Plasticity Index (%)	UCS (psf)	Swell Pressure (psf)	Swell Percent (%)
			3 5	12		**COARSE ALLUVIUM** Poorly-graded SAND (SP), mostly fine sand, few clay, medium dense, pale olive, wet, iron oxidation.											
			4 8	8		Poorly-graded SAND with gravel (SP), mostly medium to coarse sand, little fine to coarse gravel, medium dense, olive, wet, maximum particle size 0.75-inch.											
40.0 ft.																	
			4 5	5		**DENVER FORMATION** Claystone, very soft, slightly weathered, blueish gray, moist, iron oxidation, black stringers.											
41.0 ft.						**END OF EXPLORATION**											

Groundwater Depth / Monitoring Well Configuration

General Notes:
1) Soil classifications are in general accordance with ASTM D2487 Standard Practice for Classification of Soils for Engineering Purposes (Unified Soil Classification System)
2) The maximum particle size identified in the material description is dependent on sampler dimensions.
3) Additional information is provided on the Boring Log Key.

Groundwater Data:

Date:	Elapsed Time:	Depth to Groundwater:
05/12/21	7 days	DNE
06/21/21	47 days	N/A
07/19/21	75 days	N/A

LITHOS ENGINEERING

Thornton WATER PROJECT

TWP SEGMENT A,
PROJECT No. 12-777H5

CLIENT

CITY OF THORNTON
12450 WASHINGTON ST,
THORNTON, CO 80241
720.977.6700 tel 000.000.0000 fax
www.thorntonwaterproject.com

CONSULTANT

LITHOS ENGINEERING
2750 S WADSWORTH BLVD, SUITE D-200
DENVER, COLORADO 80227
T 303.625.9502
WWW.LITHOSENG.COM

ISSUE/REVISION

I/R	DATE	DESCRIPTION
A	10/14/2021	95% PREFINAL SUBMITTAL

VERIFIED SCALES

SCALE: NTS

BAR IS ONE INCH ON ORIGINAL DRAWING
0 1"
IF NOT ONE INCH ON THIS SHEET, ADJUST SCALES ACCORDINGLY

DRAWN BY:	JP
CHKD BY:	LH
CHKD BY:	NS
APPD BY:	NS

PROJECT NUMBER

60619101

SHEET TITLE

TUNNEL BORING LOGS 5

SHEET NUMBER

DT34

Z:\Shared\S-Drive\Projects\19049 Thornton RWL - Thornton Reach\Design\Dwgs\Phase I - Boring Logs.dwg

BORING: TB-1700

Project Name: TWP. Thornton Reach, Ph. 1
Project Number: 19049
Client's Name: AECOM
Owner's Name: City of Thornton
Drilling Subcontractor: Elite Drilling Services
Lithos Representative: J.Halverson
Date(s) of Drilling: 04/14/21

Drilling and Sampling Methods

Drill Make and Model: CME 550X
Drilling Method: Solid Stem Auger
Bit Type: Cutting Head
Casing Description: N/A
Hammer Weight (lbs)/Fall (in): 140/30
Sampler Type(s): Mod. Cal., SPT
Sampler Diameter(s): 2.0 inches, 1.4 inches

LITHOS ENGINEERING

Boring Location: 420'NNE of Quebec & 124th
Boring Elevation: 5075.0 feet
Notes: Elevation estimated from AECOM plan and profile.

Sampling Data | Visual Material Description | Laboratory Testing Results

Soil:
-GEOLOGIC INTERPRETATION-
USCS Classification (group symbol), particle sizes, density or consistency, color, moisture, other descriptions

Rock:
-GEOLOGIC INTERPRETATION-
Bedrock Classification, hardness, weather, color, texture, joint size, other descriptions

Elev. (ft)	Sample Identification	Blow Count/6 in	Recovery (in) / RQD (%)	Visual Material Description	Moisture Content (%)	Dry Unit Weight (pcf)	Water Soluble Sulfates (%)	Gravel Content (%)	Sand Content (%)	Fines Content (%)	Liquid Limit (%)	Plasticity Index (%)	UCS (psf)	Swell Pressure (psf)	Swell Percent (%)
				FINE ALLUVIUM LEAN CLAY with sand (CL), little fine to medium sand, yellowish brown to olive brown, dry to moist, dry on surface moist 1-2' down, trace organics, description from auger cuttings and wall of borehole. 1.0 ft.											
				COARSE ALLUVIUM Top of coarse alluvium determined from auger cuttings and borehole wall.											
	3 4	12		Clayey SAND (SC), mostly very fine to medium sand, some clay, loose, pale olive, moist, high plasticity.	20	107			47	25	11				
	2 5	9		As above except mostly fine to coarse sand, some fines, trace fine gravel, loose, wet.	18	109		1	56	43	24	10			
	6 15	0		12.5 ft. **DENVER FORMATION** Claystone, very soft, slightly weathered, olive, 1" sandstone interbed - pale olive, mostly fine to medium sand, wet, no recovery in cal sampler, drove split spoon to obtain sample.											
	8 7	2		Clayey Sandstone, very soft, slightly weathered, olive, mostly fine sand, some clay.	22	69			43	26	13				
	42 6/11"	1		As above except dark brown, bag sample from sampler shoe.											
	50/4"	4		Sandy Siltstone, soft, fresh, gray, some to mostly fine sand, moist to wet.	15	113			54	NV	NP	5,308			
	50/5"	4		Claystone, very soft, fresh, dark gray, moist to wet.	13	119			86	36	18	15,810			
	50/5"	4		Sandstone, very soft, moderately to highly weathered, pale olive, mostly fine to medium sand, wet.											
	50/5"	5		Claystone, very soft, fresh, dark gray, moist to wet.											

Groundwater Depth / Monitoring Well Configuration

General Notes:
1) Soil classifications are in general accordance with ASTM D2487 Standard Practice for Classification of Soils for Engineering Purposes (Unified Soil Classification System)
2) The maximum particle size identified in the material description is dependent on sampler dimensions.
3) Additional information is provided on the Boring Log Key.

Groundwater Data:

Date:	Elapsed Time:	Depth to Groundwater:

BORING: TB-1700

Project Name: TWP. Thornton Reach, Ph. 1
Project Number: 19049
Client's Name: AECOM
Owner's Name: City of Thornton
Drilling Subcontractor: Elite Drilling Services
Lithos Representative: J.Halverson
Date(s) of Drilling: 04/14/21

Drilling and Sampling Methods

Drill Make and Model: CME 550X
Drilling Method: Solid Stem Auger
Bit Type: Cutting Head
Casing Description: N/A
Hammer Weight (lbs)/Fall (in): 140/30
Sampler Type(s): Mod. Cal., SPT
Sampler Diameter(s): 2.0 inches, 1.4 inches

LITHOS ENGINEERING

Boring Location: 420'NNE of Quebec & 124th
Boring Elevation: 5075.0 feet
Notes: Elevation estimated from AECOM plan and profile.

Sampling Data | Visual Material Description | Laboratory Testing Results

Soil:
-GEOLOGIC INTERPRETATION-
USCS Classification (group symbol), particle sizes, density or consistency, color, moisture, other descriptions

Rock:
-GEOLOGIC INTERPRETATION-
Bedrock Classification, hardness, weather, color, texture, joint size, other descriptions

Elev. (ft)	Sample Identification	Blow Count/6 in	Recovery (in) / RQD (%)	Visual Material Description
				33-33.5' - Hard Drilling/Layer.
	50/6"	7		As above except soft to very soft, dry to moist. 35.5-37' - Hard Drilling/Layer.
	50/6"	6		As above. 41.0 ft. **END OF EXPLORATION**

General Notes:
1) Soil classifications are in general accordance with ASTM D2487 Standard Practice for Classification of Soils for Engineering Purposes (Unified Soil Classification System)
2) The maximum particle size identified in the material description is dependent on sampler dimensions.
3) Additional information is provided on the Boring Log Key.

Groundwater Data:

Date:	Elapsed Time:	Depth to Groundwater:

BORING: TB-1800

Project Name: TWP. Thornton Reach, Ph. 1
Project Number: 19049
Client's Name: AECOM
Owner's Name: City of Thornton
Drilling Subcontractor: Elite Drilling Services
Lithos Representative: J.Halverson
Date(s) of Drilling: 04/13/21

Drilling and Sampling Methods

Drill Make and Model: 48X Mobile
Drilling Method: Hollow Stem Auger, NQ
Bit Type: Cutting Head
Casing Description: Hollow Stem Auger, NQ
Hammer Weight (lbs)/Fall (in): 140/30
Sampler Type(s): Mod. Cal., NQ
Sampler Diameter(s): 2.0 inches, 1.874 inches

LITHOS ENGINEERING

Boring Location: 275'N 124 on Quebec, E side
Boring Elevation: 5087.0 feet
Notes: Elevation estimated from AECOM plan and profile.

Sampling Data | Visual Material Description | Laboratory Testing Results

Soil:
-GEOLOGIC INTERPRETATION-
USCS Classification (group symbol), particle sizes, density or consistency, color, moisture, other descriptions

Rock:
-GEOLOGIC INTERPRETATION-
Bedrock Classification, hardness, weather, color, texture, joint size, other descriptions

Elev. (ft)	Sample Identification	Blow Count/6 in	Recovery (in) / RQD (%)	Visual Material Description	Moisture Content (%)	Dry Unit Weight (pcf)	Water Soluble Sulfates (%)	Gravel Content (%)	Sand Content (%)	Fines Content (%)	Liquid Limit (%)	Plasticity Index (%)	UCS (psf)	Swell Pressure (psf)	Swell Percent (%)
				FINE ALLUVIUM LEAN CLAY with sand (CL), little fine to coarse sand, pale olive to brown, dry to moist, dry on surface moist 1-2' down, description from auger cuttings and wall of borehole, few organics on surface.											
	3 5	8		LEAN CLAY (CL), trace fine sand, medium stiff, brown, moist, high plasticity, white precipitate. 10.0 ft.											
	5 8	10		**COARSE ALLUVIUM** Clayey SAND (SC), mostly very fine to fine sand, some to mostly clay, stiff, brown, moist, high plasticity.	14	117				49	26	13	4,220		
	6 10	12		15.0 ft. **FINE ALLUVIUM** LEAN CLAY with sand (CL), little fine to medium sand, very stiff, olive, moist, high plasticity, coarser grains occur in pockets - pale olive. 18.0 ft. **DENVER FORMATION** Top of bedrock determined from change in drill rig action.											
	17 30	10		Claystone, very soft, slightly weathered, olive, few fine sand, moist, iron oxidation.	12	120				91	50	33	13,786		
	12 27	8		As above except olive to gray to brown, some fine sand, trace to few black grains.											
	33 17/11"	9		As above except soft, olive, no black grains, iron oxidation.	14	120				99	65	46	36,247		
	30 20/11"	9		Silty Sandstone, very soft, fresh, gray to olive, mostly fine sand, some silt, dry to moist.											
	50/5"	7		As above.	16	93				44	NV	NP			

Groundwater Depth / Monitoring Well Configuration

General Notes:
1) Soil classifications are in general accordance with ASTM D2487 Standard Practice for Classification of Soils for Engineering Purposes (Unified Soil Classification System)
2) The maximum particle size identified in the material description is dependent on sampler dimensions.
3) Additional information is provided on the Boring Log Key.

Groundwater Data:

Date:	Elapsed Time:	Depth to Groundwater:
04/20/21	7 days	12.8 feet
06/21/21	69 days	12.2 feet
07/19/21	97 days	12.5 feet

BORING: TB-1800

Project Name: TWP. Thornton Reach, Ph. 1
Project Number: 19049
Client's Name: AECOM
Owner's Name: City of Thornton
Drilling Subcontractor: Elite Drilling Services
Lithos Representative: J.Halverson
Date(s) of Drilling: 04/13/21

Drilling and Sampling Methods

Drill Make and Model: 48X Mobile
Drilling Method: Hollow Stem Auger, NQ
Bit Type: Cutting Head
Casing Description: Hollow Stem Auger, NQ
Hammer Weight (lbs)/Fall (in): 140/30
Sampler Type(s): Mod. Cal., NQ
Sampler Diameter(s): 2.0 inches, 1.874 inches

LITHOS ENGINEERING

Boring Location: 275'N 124 on Quebec, E side
Boring Elevation: 5087.0 feet
Notes: Elevation estimated from AECOM plan and profile.

Sampling Data | Visual Material Description | Laboratory Testing Results

Soil:
-GEOLOGIC INTERPRETATION-
USCS Classification (group symbol), particle sizes, density or consistency, color, moisture, other descriptions

Rock:
-GEOLOGIC INTERPRETATION-
Bedrock Classification, hardness, weather, color, texture, joint size, other descriptions

Elev. (ft)	Sample Identification	Blow Count/6 in	Recovery (in) / RQD (%)	Visual Material Description	Moisture Content (%)	Dry Unit Weight (pcf)	Water Soluble Sulfates (%)	Gravel Content (%)	Sand Content (%)	Fines Content (%)	Liquid Limit (%)	Plasticity Index (%)	UCS (psf)	Swell Pressure (psf)	Swell Percent (%)
	50/6"	9		Interbedded Sandstone and Siltstone, very soft, fresh, gray to olive, wet.											
	50/6"	6	8 / 83	1.2 As above. Interbedded Claystone and Sandstone, very soft, fresh, claystone is dark gray, sandstone is light gray, some fine sand.	13	117							36,721		
			23 / 74	1.2 As above.											
			4.3 / 0	Sandstone, very soft, fresh, light gray, mostly fine to medium sand.											
			36.7% / 8	Interbedded Claystone and Sandstone, very soft, fresh, light gray to dark gray, some fine to medium sand.											
			31 / 7	As above except, very soft to soft. 57.0 ft. **END OF EXPLORATION**											

Groundwater Depth / Monitoring Well Configuration

General Notes:
1) Soil classifications are in general accordance with ASTM D2487 Standard Practice for Classification of Soils for Engineering Purposes (Unified Soil Classification System)
2) The maximum particle size identified in the material description is dependent on sampler dimensions.
3) Additional information is provided on the Boring Log Key.

Groundwater Data:

Date:	Elapsed Time:	Depth to Groundwater:
04/20/21	7 days	12.8 feet
06/21/21	69 days	12.2 feet
07/19/21	97 days	12.5 feet

BORING: TB-1900

Project Name: TWP. Thornton Reach, Ph. 1
Project Number: 19049
Client's Name: AECOM
Owner's Name: City of Thornton
Drilling Subcontractor: Unlimited Access
Lithos Representative: Adam Pring
Date(s) of Drilling: 05/14/20

Drilling and Sampling Methods

Drill Make and Model: CME 55
Drilling Method: Solid Stem Auger
Bit Type: Cutting Head
Casing Description: N/A
Hammer Weight (lbs)/Fall (in): 140/30
Sampler Type(s): Mod. Cal.
Sampler Diameter(s): 2.0 inches

LITHOS ENGINEERING

Boring Location: 265'WNW of 120th & Quebec
Boring Elevation: 5132.0 feet
Notes: Elevation estimated from AECOM plan and profile.

Sampling Data | Visual Material Description | Laboratory Testing Results

Soil:
-GEOLOGIC INTERPRETATION-
USCS Classification (group symbol), particle sizes, density or consistency, color, moisture, other descriptions

Rock:
-GEOLOGIC INTERPRETATION-
Bedrock Classification, hardness, weather, color, texture, joint size, other descriptions

Elev. (ft)	Sample Identification	Blow Count/6 in	Recovery (in) / RQD (%)	Visual Material Description	Moisture Content (%)	Dry Unit Weight (pcf)	Water Soluble Sulfates (%)	Gravel Content (%)	Sand Content (%)	Fines Content (%)	Liquid Limit (%)	Plasticity Index (%)	UCS (psf)	Swell Pressure (psf)	Swell Percent (%)
				COARSE ALLUVIUM Clayey SAND (SC), trace fine gravel, brown and dark brown, moist, little organics and roots, geologic interpretation from auger cuttings.											
	5 9	4		Poorly graded SAND (SP), trace clay, mostly fine sand, medium dense, brown, moist.											
	6 16	4		Clayey SAND (SC), mostly fine sand, some clay, medium dense, dark brown and slightly yellowish brown, moist.	17	111			37	28	16				
	16 34	6		10.0 ft. **DENVER FORMATION** Sandy silty Claystone, very soft, dark brown, completely weathered, some fine sand, moist.	16	116			55	30	12	4,470			
	17 25	8		Claystone, very soft, light gray, completely weathered, trace iron oxidation.											
	50/9"	8		Silty Claystone with sand, very soft, highly weathered, light gray, little fine sand.											
	50/7"	8		As above.	27	110			59	35	23	19,220			
	16 22	12		Silty Claystone, very soft, dark gray.											
	22 28	8		As above except little iron oxidation.											
	20 24	8		Claystone, very soft, dark gray, trace silt.											
	50/7"	8		Silty Claystone, soft, moderately weathered, brown to dark brown.											

Groundwater Depth / Monitoring Well Configuration

General Notes:
1) Soil classifications are in general accordance with ASTM D2487 Standard Practice for Classification of Soils for Engineering Purposes (Unified Soil Classification System)
2) The maximum particle size identified in the material description is dependent on sampler dimensions.
3) Additional information is provided on the Boring Log Key.

Groundwater Data:

Date:	Elapsed Time:	Depth to Groundwater:
06/21/20	7 days	13.8 feet
06/21/21	403 days	11.3 feet
07/19/21	431 days	11.3 feet

BORING: TB-1900

Project Name: TWP. Thornton Reach, Ph. 1
Project Number: 19049
Client's Name: AECOM
Owner's Name: City of Thornton
Drilling Subcontractor: Unlimited Access
Lithos Representative: Adam Pring
Date(s) of Drilling: 05/14/20

Drilling and Sampling Methods

Drill Make and Model: CME 55
Drilling Method: Solid Stem Auger
Bit Type: Cutting Head
Casing Description: N/A
Hammer Weight (lbs)/Fall (in): 140/30
Sampler Type(s): Mod. Cal.
Sampler Diameter(s): 2.0 inches

LITHOS ENGINEERING

Boring Location: 265'WNW of 120th & Quebec
Boring Elevation: 5132.0 feet
Notes: Elevation estimated from AECOM plan and profile.

Sampling Data | Visual Material Description | Laboratory Testing Results

Soil:
-GEOLOGIC INTERPRETATION-
USCS Classification (group symbol), particle sizes, density or consistency, color, moisture, other descriptions

Rock:
-GEOLOGIC INTERPRETATION-
Bedrock Classification, hardness, weather, color, texture, joint size, other descriptions

Elev. (ft)	Sample Identification	Blow Count/6 in	Recovery (in) / RQD (%)	Visual Material Description
	50/4"	4		As above. 36.0 ft. **END OF EXPLORATION**

General Notes:
1) Soil classifications are in general accordance with ASTM D2487 Standard Practice for Classification of Soils for Engineering Purposes (Unified Soil Classification System)
2) The maximum particle size identified in the material description is dependent on sampler dimensions.
3) Additional information is provided on the Boring Log Key.

Groundwater Data:

Date:	Elapsed Time:	Depth to Groundwater:
06/21/20	7 days	13.8 feet
06/21/21	403 days	11.3 feet
07/19/21	431 days	11.3 feet

BORING: TB-2000

Project Name: TWP. Thornton Reach, Ph. 1
Project Number: 19049
Client's Name: AECOM
Owner's Name: City of Thornton
Drilling Subcontractor: Kumar and Associates
Lithos Representative: Adam Pring
Date(s) of Drilling: 04/28/2020

Drilling and Sampling Methods

Drill Make and Model: CME 55
Drilling Method: Hollow Stem Auger (HSA)
Bit Type: Cutting Head
Casing Description: HSA
Hammer Weight (lbs)/Fall (in): 140/30
Sampler Type(s): Mod. Cal.
Sampler Diameter(s): 2.0 inches

LITHOS ENGINEERING

Boring Location: 250'WSW of 120th & Quebec
Boring Elevation: 5132.0 feet
Notes: Elevation estimated from AECOM plan and profile.

Sampling Data | Visual Material Description | Laboratory Testing Results

Soil:
-GEOLOGIC INTERPRETATION-
USCS Classification (group symbol), particle sizes, density or consistency, color, moisture, other descriptions

Rock:
-GEOLOGIC INTERPRETATION-
Bedrock Classification, hardness, weather, color, texture, joint size, other descriptions

Elev. (ft)	Sample Identification	Blow Count/6 in	Recovery (in) / RQD (%)	Visual Material Description	Moisture Content (%)	Dry Unit Weight (pcf)	Water Soluble Sulfates (%)	Gravel Content (%)	Sand Content (%)	Fines Content (%)	Liquid Limit (%)	Plasticity Index (%)	UCS (psf)	Swell Pressure (psf)	Swell Percent (%)
				SOFT DIG POTHOLE Sample was not collected. Pea gravel not representative of native ground conditions.											
	3 3	2		5.0 ft. **FINE ALLUVIUM** Sandy LEAN CLAY (CL), some fine sand, medium stiff, tanish brown, slightly moist, calcareous.											
	7 10	4		7.5 ft. **COARSE ALLUVIUM** Clayey SAND (SC), mostly fine sand, some clay, medium dense, tanish brown, slightly moist, calcareous.	14	119				45	31	19			
	9 12	4		As above.											
	5 8	6		12.5 ft. **FINE ALLUVIUM** Sandy LEAN CLAY (CL), some to mostly fine sand, stiff, tanish brown, moist, calcareous. 14.0 ft. **DENVER FORMATION** Silty Claystone, very soft, highly weathered, brown to dark gray.	18	114		0	49	51					
	13 13	8													
	6 11	8		Claystone, very soft, moderately weathered, dark gray to brown, few silt.	22	103							3,245		
	16 30	8		Silty Claystone, very soft, moderately weathered, dark gray, little silt, calcareous.											
	17 30	8		Claystone, very soft, moderately weathered, dark gray, calcareous.											
	20 30	8		As above except trace lignite.											
	12 42	8		As above.	18	112							11,962		
	50/ 10"	8		Silty Claystone, very soft, moderately weathered, dark gray, some silt.											

Groundwater Depth / Monitoring Well Configuration

General Notes:
1) Soil classifications are in general accordance with ASTM D2487 Standard Practice for Classification of Soils for Engineering Purposes (Unified Soil Classification System)
2) The maximum particle size identified in the material description is dependent on sampler dimensions.
3) Additional information is provided on the Boring Log Key.

Groundwater Data:

Date:	Elapsed Time:	Depth to Groundwater:
05/05/20	7 days	13.6 feet
06/21/21	419 days	13.1 feet
07/19/21	447 days	13.1 feet

BORING: TB-2000

Project Name: TWP. Thornton Reach, Ph. 1
Project Number: 19049
Client's Name: AECOM
Owner's Name: City of Thornton
Drilling Subcontractor: Kumar and Associates
Lithos Representative: Adam Pring
Date(s) of Drilling: 04/28/2020

Drilling and Sampling Methods

Drill Make and Model: CME 55
Drilling Method: Hollow Stem Auger (HSA)
Bit Type: Cutting Head
Casing Description: HSA
Hammer Weight (lbs)/Fall (in): 140/30
Sampler Type(s): Mod. Cal.
Sampler Diameter(s): 2.0 inches

LITHOS ENGINEERING

Boring Location: 250'WSW of 120th & Quebec
Boring Elevation: 5132.0 feet
Notes: Elevation estimated from AECOM plan and profile.

Sampling Data | Visual Material Description | Laboratory Testing Results

Soil:
-GEOLOGIC INTERPRETATION-
USCS Classification (group symbol), particle sizes, density or consistency, color, moisture, other descriptions

Rock:
-GEOLOGIC INTERPRETATION-
Bedrock Classification, hardness, weather, color, texture, joint size, other descriptions

Elev. (ft)	Sample Identification	Blow Count/6 in	Recovery (in) / RQD (%)	Visual Material Description
	50/7"	7		As above except slightly weathered, increased lignite content.
	50/8"	4		As above. 36.0 ft. **END OF EXPLORATION**

General Notes:
1) Soil classifications are in general accordance with ASTM D2487 Standard Practice for Classification of Soils for Engineering Purposes (Unified Soil Classification System)
2) The maximum particle size identified in the material description is dependent on sampler dimensions.
3) Additional information is provided on the Boring Log Key.

Groundwater Data:

Date:	Elapsed Time:	Depth to Groundwater:
05/05/20	7 days	13.6 feet
06/21/21	419 days	13.1 feet
07/19/21	447 days	13.1 feet

LITHOS ENGINEERING

Thornton WATER PROJECT

TWP SEGMENT A,
PROJECT No. 12-777H5

CLIENT

CITY OF THORNTON
12450 WASHINGTON ST,
THORNTON, CO 80241
720.977.6700 tel 000.000.0000 fax
www.thorntonwaterproject.com

CONSULTANT

LITHOS ENGINEERING
2750 S WADSWORTH BLVD, SUITE D-200
DENVER, COLORADO 80227
T 303.625.9502
WWW.LITHOSENG.COM

ISSUE/REVISION

I/R	DATE	DESCRIPTION
A	10/14/2021	95% PREFINAL SUBMITTAL

VERIFIED SCALES

SCALE: NTS

BAR IS ONE INCH ON ORIGINAL DRAWING
0 1"
IF NOT ONE INCH ON THIS SHEET, ADJUST SCALES ACCORDINGLY

DRAWN BY:	JP
CHKD BY:	LH
CHKD BY:	NS
APPD BY:	NS

PROJECT NUMBER

60619101

SHEET TITLE

TUNNEL BORING LOGS 6

SHEET NUMBER

DT35

Z:\Shared\S-Drive\Projects\19049 Thornton R\WL - Thornton Reach\Design\Dwgs\Phase I - Boring Logs.dwg

BORING: TB-2100

Project Name: TWP. Thornton Reach, Ph. 1
Project Number: 19049
Client's Name: AECOM
Owner's Name: City of Thornton
Drilling Subcontractor: Elite Drilling Services
Lithos Representative: J.Halverson
Date(s) of Drilling: 04/14/21

Drilling and Sampling Methods

Drill Make and Model: CME 550X
Drilling Method: Solid Stem Auger
Bit Type: Cutting Head
Casing Description: N/A
Hammer Weight (lbs)/Fall (in): 140/30
Sampler Type(s): Mod. Cal., SPT
Sampler Diameter(s): 2.0 inches, 1.4 inches

LITHOS ENGINEERING

Boring Location: 1250'W of Quebec & 120th
Boring Elevation: 5137.0 feet
Notes: Elevation needs updating, based on AECOM profile and cover assumptions.

Sampling Data | Visual Material Description | Laboratory Testing Results

Soil:
-GEOLOGIC INTERPRETATION-
USCS Classification (group symbol), particle sizes, density or consistency, color, moisture, other descriptions

Rock:
-GEOLOGIC INTERPRETATION-
Bedrock Classification, hardness, weather, color, texture, joint size, other descriptions

Depth (ft)	Elevation (ft)	Sample Identification	Blow Count/6 in	Recovery (in) / RQD (%)	Drilling Rate (min./ft.)	Visual Material Description	Moisture Content (%)	Dry Unit Weight (pcf)	Water Soluble Sulfates (%)	Gravel Content (%)	Sand Content (%)	Fines Content (%)	Liquid Limit (%)	Plasticity Index (%)	UCS (psf)	Swell Pressure (psf)	Swell Percent (%)
	5135					**FINE ALLUVIUM** LEAN CLAY with sand (CL), little fine to coarse sand, pale olive to brown, dry to moist, dry on surface - moist 1-2' down, description from auger cuttings and wall of borehole, few organics on surface, trace organics.											
5	5130	3 7	8			LEAN CLAY (CL), few fine sand, stiff, olive yellow, moist, high plasticity, white precipitate.											
						10.0 ft.											
10	5125	7 13	8			**DENVER FORMATION** Claystone, very soft, slightly weathered, olive yellow, few fine sand, iron oxidation, moist.											
15	5120	20 50/5"	10			Silty Sandstone, very soft, moderately weathered, olive yellow to pale olive, mostly fine sand, some silt, moist to wet, iron oxidation.	23	100				36	NV	NP			
	5118	36 120/2"	4			As above except wet.											
20	5115	18 102/4"	10			As above except olive yellow to gray, wet, coarse sand occurs as pockets/nodules.	19	103				54	NV	NP	8,070		
	5110	11 39	10			Claystone, very soft, moderately weathered, olive yellow, few fine sand, wet, iron oxidation.											
25	5105	35 152/2"	7			Claystone with sand, very soft, moderately weathered, olive yellow to gray, little fine sand, moist, iron oxidation.	15	116				76	37	20	19,770		
	5100	10 20	11			Claystone, very soft, slightly weathered, gray, moist, iron oxidation, lignite stringers ≥ 1-2mm.											
30	5095	32 119/2"	6			As above except fresh, few fine sand, dry to moist, no iron oxidation.											
	5095						24	101									

Groundwater Depth / Monitoring Well Configuration

General Notes:
1) Soil classifications are in general accordance with ASTM D2487 Standard Practice for Classification of Soils for Engineering Purposes (Unified Soil Classification System)
2) The maximum particle size identified in the material description is dependent on sampler dimensions.
3) Additional information is provided on the Boring Log Key.

Groundwater Data:

Date:	Elapsed Time:	Depth to Groundwater:
04/21/21	7 days	7.1 feet
06/21/21	68 days	6.6 feet
07/19/21	96 days	6.4 feet

BORING: TB-2100

Project Name: TWP. Thornton Reach, Ph. 1
Project Number: 19049
Client's Name: AECOM
Owner's Name: City of Thornton
Drilling Subcontractor: Elite Drilling Services
Lithos Representative: J.Halverson
Date(s) of Drilling: 04/14/21

Drilling and Sampling Methods

Drill Make and Model: CME 550X
Drilling Method: Solid Stem Auger
Bit Type: Cutting Head
Casing Description: N/A
Hammer Weight (lbs)/Fall (in): 140/30
Sampler Type(s): Mod. Cal., SPT
Sampler Diameter(s): 2.0 inches, 1.4 inches

LITHOS ENGINEERING

Boring Location: 1250'W of Quebec & 120th
Boring Elevation: 5137.0 feet
Notes: Elevation needs updating, based on AECOM profile and cover assumptions.

Sampling Data | Visual Material Description | Laboratory Testing Results

Soil:
-GEOLOGIC INTERPRETATION-
USCS Classification (group symbol), particle sizes, density or consistency, color, moisture, other descriptions

Rock:
-GEOLOGIC INTERPRETATION-
Bedrock Classification, hardness, weather, color, texture, joint size, other descriptions

Depth (ft)	Elevation (ft)	Sample Identification	Blow Count/6 in	Recovery (in) / RQD (%)	Drilling Rate (min./ft.)	Visual Material Description	Moisture Content (%)	Dry Unit Weight (pcf)	Water Soluble Sulfates (%)	Gravel Content (%)	Sand Content (%)	Fines Content (%)	Liquid Limit (%)	Plasticity Index (%)	UCS (psf)	Swell Pressure (psf)	Swell Percent (%)
35	5090	12 36	12			As above except fresh, dark gray, iron oxidation.											
40	5085	50/6"	5			As above except fresh, dark gray, dry to moist, trace iron oxidation.											
45	5080	50/6"	6			As above except darker gray.											
50	5075	50/5"	5			As above.											
						51.0 ft.											
						END OF EXPLORATION											

Groundwater Depth / Monitoring Well Configuration

General Notes:
1) Soil classifications are in general accordance with ASTM D2487 Standard Practice for Classification of Soils for Engineering Purposes (Unified Soil Classification System)
2) The maximum particle size identified in the material description is dependent on sampler dimensions.
3) Additional information is provided on the Boring Log Key.

Groundwater Data:

Date:	Elapsed Time:	Depth to Groundwater:
04/21/21	7 days	7.1 feet
06/21/21	68 days	6.6 feet
07/19/21	96 days	6.4 feet

BORING: TB-2200

Project Name: TWP. Thornton Reach, Ph. 1
Project Number: 19049
Client's Name: AECOM
Owner's Name: City of Thornton
Drilling Subcontractor: Elite Drilling Services
Lithos Representative: J.Halverson
Date(s) of Drilling: 05/07/21

Drilling and Sampling Methods

Drill Make and Model: CME 75
Drilling Method: Hollow Stem Auger (HSA)
Bit Type: Cutting Head
Casing Description: HSA
Hammer Weight (lbs)/Fall (in): 140/30
Sampler Type(s): Mod. Cal.
Sampler Diameter(s): 2.0 inches

LITHOS ENGINEERING

Boring Location: 1250'W of Quebec on 120th
Boring Elevation: 5137.0 feet
Notes: Elevation needs updating, based on AECOM profile and cover assumptions.

Sampling Data | Visual Material Description | Laboratory Testing Results

Soil:
-GEOLOGIC INTERPRETATION-
USCS Classification (group symbol), particle sizes, density or consistency, color, moisture, other descriptions

Rock:
-GEOLOGIC INTERPRETATION-
Bedrock Classification, hardness, weather, color, texture, joint size, other descriptions

Depth (ft)	Elevation (ft)	Sample Identification	Blow Count/6 in	Recovery (in) / RQD (%)	Drilling Rate (min./ft.)	Visual Material Description	Moisture Content (%)	Dry Unit Weight (pcf)	Water Soluble Sulfates (%)	Gravel Content (%)	Sand Content (%)	Fines Content (%)	Liquid Limit (%)	Plasticity Index (%)	UCS (psf)	Swell Pressure (psf)	Swell Percent (%)
	5135					**FINE ALLUVIUM** Sandy LEAN CLAY (CL), some fine to medium sand, pale olive, dry to moist, trace organics, geologic interpretation from auger cuttings and borehole wall.											
5	5130	1 3	6			LEAN CLAY (CL), trace fine sand, soft, olive yellow, moist, trace organics, iron oxidation, high plasticity.											
10	5125	2 8	11			Sandy SILT (ML), mostly fine sand, few to little clay, loose, olive yellow, moist.											
						11.0 ft.											
						DENVER FORMATION	20	104				55	NV	NP			
15	5120	7 11	9			Claystone, very soft, slightly to moderatedly weathered, olive, calcite, iron oxidation, trace organics, moist.											
20	5115	4 8	6			As above except moderately weathered.											
	5113	8 19	8			As above except slightly weathered, no calcite.	18	115				85	52	32	12,879		
	5110	7 15	7			As above except moderately weathered, few fine sand.											
25	5105	9 19	9			As above except slightly weathered, blueish gray, trace black stingers, iron oxidation, olive mottling.	23	102				97	91	65	6,912		
	5100	6 20	8			As above.											
30	5095	50/6"	6			As above except gray.	12	124				78	51	33	21,842		

Groundwater Depth / Monitoring Well Configuration

General Notes:
1) Soil classifications are in general accordance with ASTM D2487 Standard Practice for Classification of Soils for Engineering Purposes (Unified Soil Classification System)
2) The maximum particle size identified in the material description is dependent on sampler dimensions.
3) Additional information is provided on the Boring Log Key.

Groundwater Data:

Date:	Elapsed Time:	Depth to Groundwater:
05/12/21	5 days	46.2 feet
06/21/21	45 days	8.8 feet
07/19/21	73 days	8.3 feet

BORING: TB-2200

Project Name: TWP. Thornton Reach, Ph. 1
Project Number: 19049
Client's Name: AECOM
Owner's Name: City of Thornton
Drilling Subcontractor: Elite Drilling Services
Lithos Representative: J.Halverson
Date(s) of Drilling: 05/07/21

Drilling and Sampling Methods

Drill Make and Model: CME 75
Drilling Method: Hollow Stem Auger (HSA)
Bit Type: Cutting Head
Casing Description: HSA
Hammer Weight (lbs)/Fall (in): 140/30
Sampler Type(s): Mod. Cal.
Sampler Diameter(s): 2.0 inches

LITHOS ENGINEERING

Boring Location: 1250'W of Quebec on 120th
Boring Elevation: 5137.0 feet
Notes: Elevation needs updating, based on AECOM profile and cover assumptions.

Sampling Data | Visual Material Description | Laboratory Testing Results

Soil:
-GEOLOGIC INTERPRETATION-
USCS Classification (group symbol), particle sizes, density or consistency, color, moisture, other descriptions

Rock:
-GEOLOGIC INTERPRETATION-
Bedrock Classification, hardness, weather, color, texture, joint size, other descriptions

Depth (ft)	Elevation (ft)	Sample Identification	Blow Count/6 in	Recovery (in) / RQD (%)	Drilling Rate (min./ft.)	Visual Material Description	Moisture Content (%)	Dry Unit Weight (pcf)	Water Soluble Sulfates (%)	Gravel Content (%)	Sand Content (%)	Fines Content (%)	Liquid Limit (%)	Plasticity Index (%)	UCS (psf)	Swell Pressure (psf)	Swell Percent (%)
35	5090	16 39	9			As above except olive brown, no calcite, no black stringers.											
40	5085	32 a	7			As above except fresh to slightly weathered, trace iron oxidation, trace black stringers.											
45	5080	50/6"	6			As above dark blueish gray.											
50	5075		6			Siltstone, very soft, fresh, blueish gray, few fine sand.											
						50.0 ft.											
						END OF EXPLORATION											

Groundwater Depth / Monitoring Well Configuration

General Notes:
1) Soil classifications are in general accordance with ASTM D2487 Standard Practice for Classification of Soils for Engineering Purposes (Unified Soil Classification System)
2) The maximum particle size identified in the material description is dependent on sampler dimensions.
3) Additional information is provided on the Boring Log Key.

Groundwater Data:

Date:	Elapsed Time:	Depth to Groundwater:
05/12/21	5 days	46.2 feet
06/21/21	45 days	8.8 feet
07/19/21	73 days	8.3 feet

LITHOS ENGINEERING

Thornton WATER PROJECT

TWP SEGMENT A,
PROJECT No. 12-777H5

CLIENT

CITY OF THORNTON
12450 WASHINGTON ST,
THORNTON, CO 80241
720.977.6700 tel 000.000.0000 fax
www.thorntonwaterproject.com

CONSULTANT

LITHOS ENGINEERING
2750 S WADSWORTH BLVD, SUITE D-200
DENVER, COLORADO 80227
T 303.625.9502
WWW.LITHOSENG.COM

ISSUE/REVISION

I/R	DATE	DESCRIPTION
A	10/14/2021	95% PREFINAL SUBMITTAL

VERIFIED SCALES

SCALE: NTS

BAR IS ONE INCH ON ORIGINAL DRAWING
0 1"
IF NOT ONE INCH ON THIS SHEET, ADJUST SCALES ACCORDINGLY

DRAWN BY:	JP
CHKD BY:	LH
CHKD BY:	NS
APPD BY:	NS

PROJECT NUMBER

60619101

SHEET TITLE

TUNNEL BORING LOGS 7

SHEET NUMBER

DT36

OF 83

Z:\Shared\S-Drive\Projects\19049 Thornton RWL - Thornton Reach\Design\Dwgs\Phase I - Boring Logs.dwg

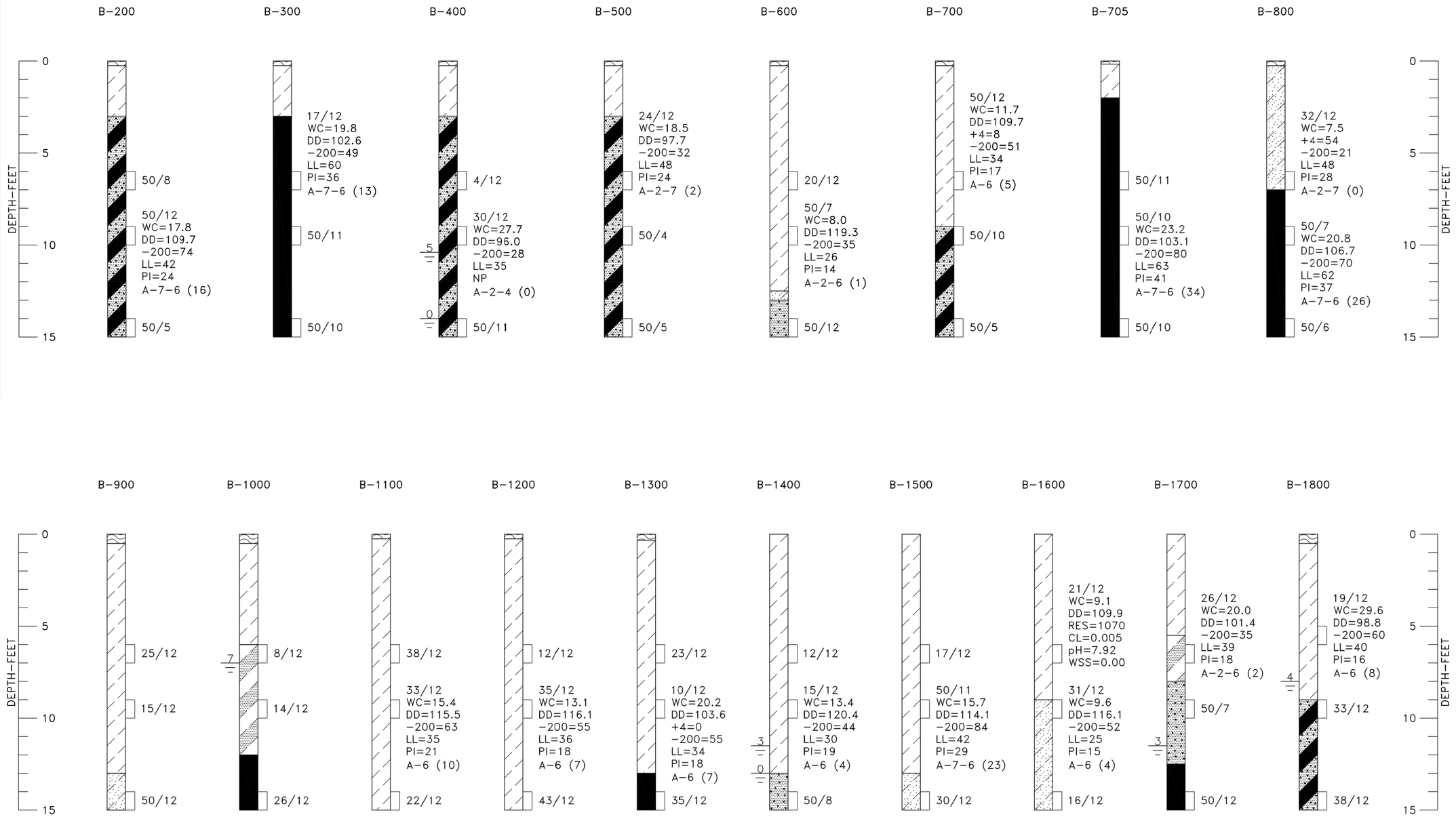

Z:\Shared\S-Drive\Projects\19049 Thornton RWL - Thornton Reach\Design\Dwgs\Phase I - Boring Logs.dwg

LITHOS ENGINEERING

Thornton WATER PROJECT

TWP SEGMENT A,
PROJECT No. 12-777H5

CLIENT

CITY OF THORNTON
12450 WASHINGTON ST,
THORNTON, CO 80241
720.977.6700 tel 000.000.0000 fax
www.thorntonwaterproject.com

CONSULTANT

LITHOS ENGINEERING
2750 S WADSWORTH BLVD, SUITE D-200
DENVER, COLORADO 80227
T 303.625.9502
WWW.LITHOSENG.COM

ISSUE/REVISION

I/R	DATE	DESCRIPTION
A	10/14/2021	95% PREFINAL SUBMITTAL

VERIFIED SCALES

SCALE: NTS

BAR IS ONE INCH ON ORIGINAL DRAWING
0 1"
IF NOT ONE INCH ON THIS SHEET, ADJUST SCALES ACCORDINGLY

DRAWN BY:	JP
CHKD BY:	LH
CHKD BY:	NS
APPD BY:	NS

PROJECT NUMBER

60619101

SHEET TITLE

OPEN-CUT BORING LOGS 1

SHEET NUMBER

DT37 OF 83

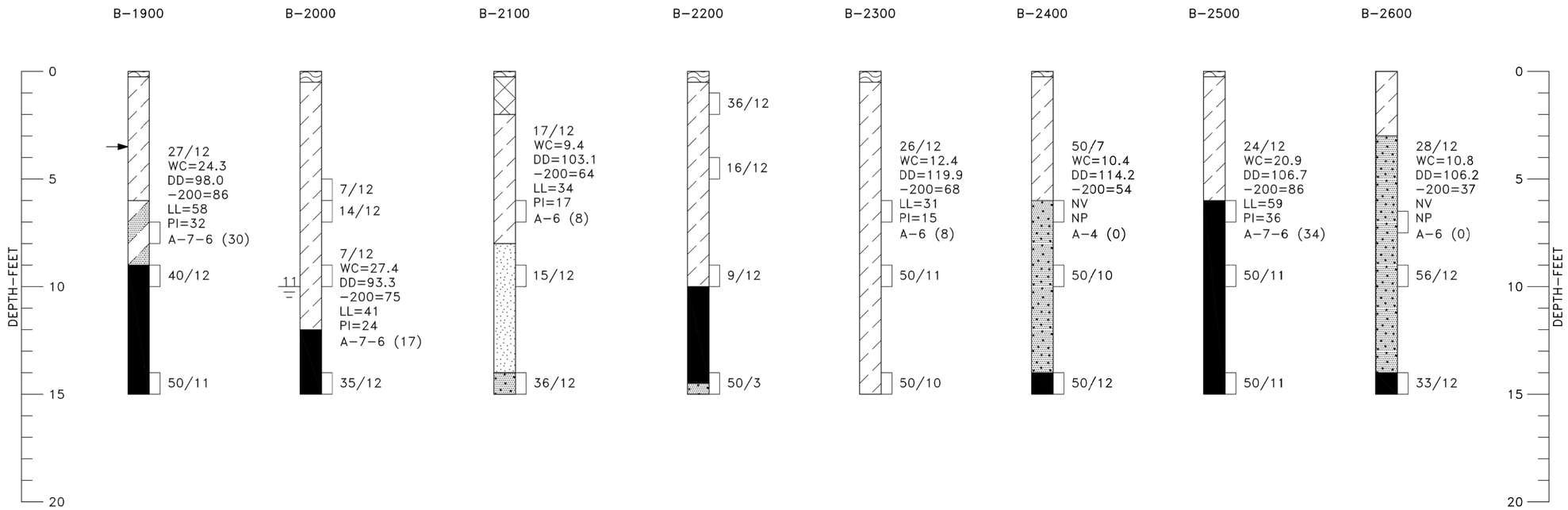

Z:\Shared\S-Drive\Projects\19049 Thornton RWL - Thornton Reach\Design\Dwgs\Phase I - Boring Logs.dwg

LITHOS ENGINEERING

Thornton WATER PROJECT

TWP SEGMENT A,
PROJECT No. 12-777H5

CLIENT

CITY OF THORNTON
12450 WASHINGTON ST,
THORNTON, CO 80241
720.977.6700 tel 000.000.0000 fax
www.thorntonwaterproject.com

CONSULTANT

LITHOS ENGINEERING
2750 S WADSWORTH BLVD, SUITE D-200
DENVER, COLORADO 80227
T 303.625.9502
WWW.LITHOSENG.COM

ISSUE/REVISION

I/R	DATE	DESCRIPTION
A	10/14/2021	95% PREFINAL SUBMITTAL

VERIFIED SCALES

SCALE: NTS

BAR IS ONE INCH ON ORIGINAL DRAWING
0 1"
IF NOT ONE INCH ON THIS SHEET, ADJUST SCALES ACCORDINGLY

DRAWN BY:	JP
CHKD BY:	LH
CHKD BY:	NS
APPD BY:	NS

PROJECT NUMBER

60619101

SHEET TITLE

OPEN-CUT BORING LOGS 2

SHEET NUMBER

DT38

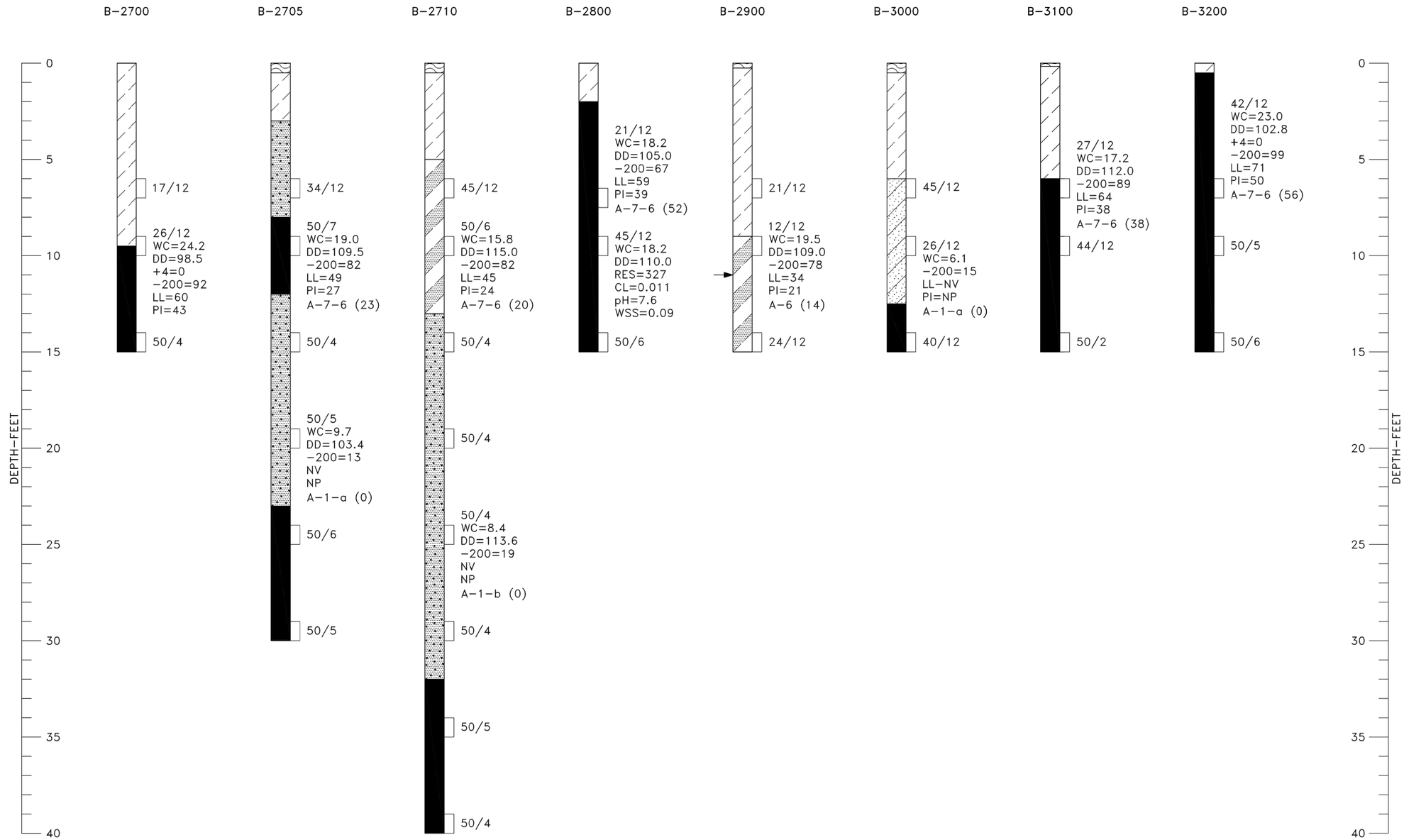

Z:\Shared\S-Drive\Projects\19049 Thornton RWL - Thornton Reach\Design\Dwgs\Phase I - Boring Logs.dwg

LITHOS ENGINEERING

Thornton WATER PROJECT

TWP SEGMENT A,
PROJECT No. 12-777H5

CLIENT

CITY OF THORNTON
12450 WASHINGTON ST,
THORNTON, CO 80241
720.977.6700 tel 000.000.0000 fax
www.thorntonwaterproject.com

CONSULTANT

LITHOS ENGINEERING
2750 S WADSWORTH BLVD, SUITE D-200
DENVER, COLORADO 80227
T 303.625.9502
WWW.LITHOSENG.COM

ISSUE/REVISION

I/R	DATE	DESCRIPTION
A	10/14/2021	95% PREFINAL SUBMITTAL

VERIFIED SCALES

SCALE: NTS

BAR IS ONE INCH ON ORIGINAL DRAWING
0 1"
IF NOT ONE INCH ON THIS SHEET, ADJUST SCALES ACCORDINGLY

DRAWN BY:	JP
CHKD BY:	LH
CHKD BY:	NS
APPD BY:	NS

PROJECT NUMBER

60619101

SHEET TITLE

OPEN-CUT BORING LOGS 3

SHEET NUMBER

DT39

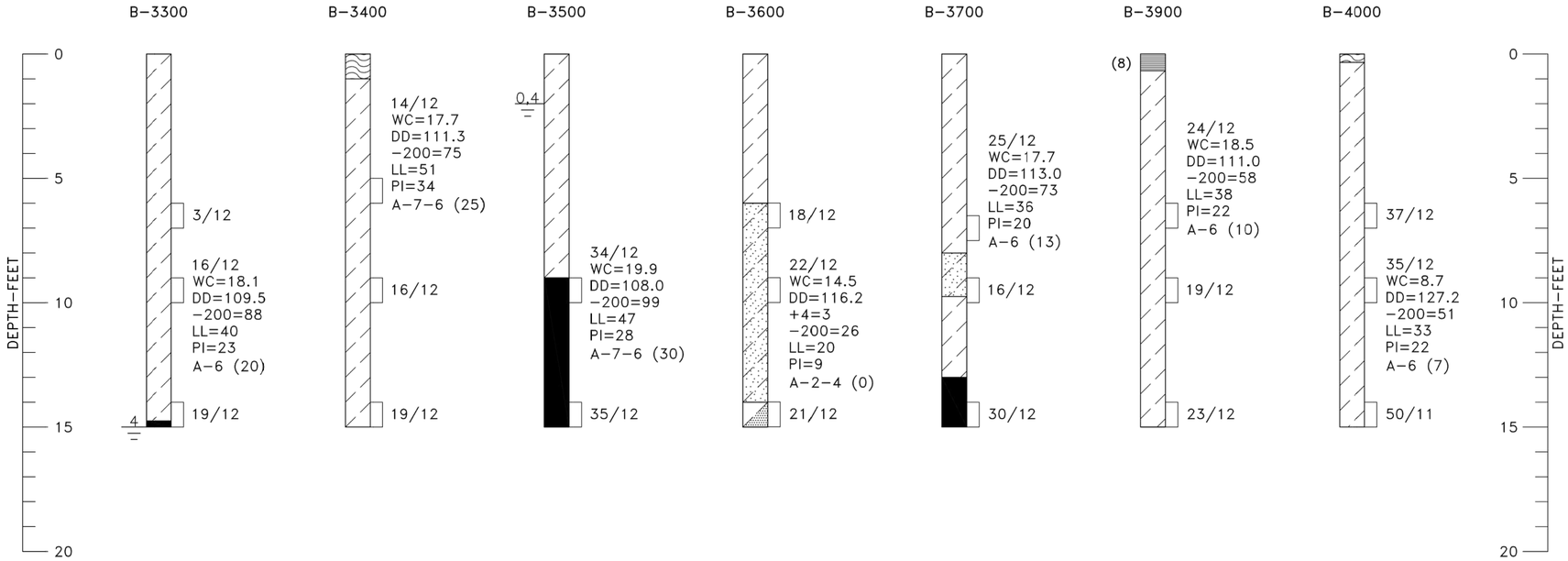

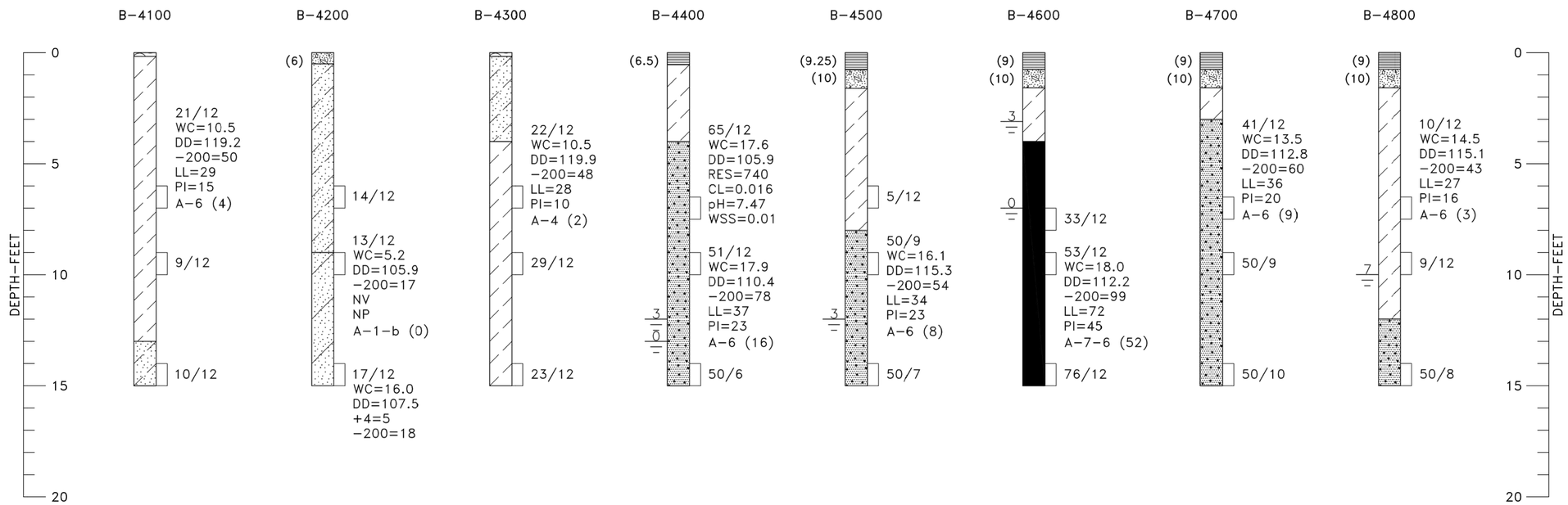

Z:\Shared\S-Drive\Projects\19049 Thornton RWL - Thornton Reach\Design\Dwgs\Phase I - Boring Logs.dwg

LITHOS ENGINEERING

Thornton WATER PROJECT

TWP SEGMENT A,
PROJECT No. 12-777H5

CLIENT

CITY OF THORNTON
12450 WASHINGTON ST,
THORNTON, CO 80241
720.977.6700 tel 000.000.0000 fax
www.thorntonwaterproject.com

CONSULTANT

LITHOS ENGINEERING
2750 S WADSWORTH BLVD, SUITE D-200
DENVER, COLORADO 80227
T 303.625.9502
WWW.LITHOSENG.COM

ISSUE/REVISION

I/R	DATE	DESCRIPTION
A	10/14/2021	95% PREFINAL SUBMITTAL

VERIFIED SCALES

SCALE: NTS

BAR IS ONE INCH ON ORIGINAL DRAWING
0 1"
IF NOT ONE INCH ON THIS SHEET, ADJUST SCALES ACCORDINGLY

DRAWN BY:	JP
CHKD BY:	LH
CHKD BY:	NS
APPD BY:	NS

PROJECT NUMBER

60619101

SHEET TITLE

OPEN-CUT BORING LOGS 4

SHEET NUMBER

DT40

LEGEND

(9.25) ASPHALT, THICKNESS IN INCHES SHOWN IN PARENTHESES TO LEFT OF THE LOG.

(10) BASE COURSE, THICKNESS IN INCHES SHOWN IN PARENTHESES TO LEFT OF THE LOG.

TOPSOIL.

LEAN CLAY TO SANDY LEAN CLAY (CL), FINE TO COARSE GRAINED SAND FRACTION, MEDIUM TO HARD, SLIGHTLY MOIST TO VERY MOIST, LIGHT BROWN TO BROWN.

POORLY GRADED SAND WITH SILT (SP-SM), FINE TO COARSE GRAINED SAND FRACTION, MEDIUM DENSE, MOIST, LIGHT BROWN.

WELL- TO POORLY GRADED SAND (SW TO SP), FINE TO COARSE GRAINED SAND FRACTION, OCCASIONAL GRAVEL, MEDIUM DENSE, SLIGHTLY MOIST TO MOIST, LIGHT BROWN TO BROWN.

CLAYEY SAND (SC), FINE TO COARSE GRAINED SAND FRACTION, MEDIUM DENSE TO VERY DENSE, MOIST TO WET, LIGHT BROWN.

WEATHERED CLAYSTONE, FINE TO MEDIUM GRAINED, STIFF TO VERY STIFF, MOIST, LIGHT BROWN.

SANDSTONE BEDROCK, OCCASIONAL CLAYEY INTERBEDS, FINE TO COARSE GRAINED, FIRM TO VERY HARD, MOIST, YELLOW TO BROWN, GENERALLY WEAK CEMENTATION WITH OCCASIONAL STRONGLY CEMENTED LAYERS.

CLAYSTONE BEDROCK, SILTY INTERBEDS, FINE TO MEDIUM GRAINED, WEATHERED TO VERY HARD, MOIST, TAN TO GRAY.

INTERBEDDED SANDSTONE AND CLAYSTONE BEDROCK, FINE TO MEDIUM GRAINED, HARD TO VERY HARD, MOIST, TAN TO GRAY.

DRIVE SAMPLE, 2-INCH I.D. CALIFORNIA LINER SAMPLE.

12/12 DRIVE SAMPLE BLOW COUNT. INDICATES THAT 12 BLOWS OF A 140-POUND HAMMER FALLING 30 INCHES WERE REQUIRED TO DRIVE THE SAMPLER 12 INCHES.

0 DEPTH TO WATER LEVEL AND NUMBER OF DAYS AFTER DRILLING MEASUREMENT WAS MADE.

DEPTH AT WHICH BORING CAVED.

NOTES

1. THE EXPLORATORY BORINGS WERE DRILLED BETWEEN APRIL 21 2020 AND MARCH 9, 2021 WITH A 4-INCH-DIAMETER CONTINUOUS-FLIGHT POWER AUGER.
2. THE LOCATIONS OF THE EXPLORATORY BORINGS WERE MEASURED APPROXIMATELY BY PACING FROM FEATURES SHOWN ON THE SITE PLAN PROVIDED.
3. THE ELEVATIONS OF THE EXPLORATORY BORINGS WERE NOT MEASURED AND THE LOGS OF THE EXPLORATORY BORINGS ARE PLOTTED TO DEPTH.
4. THE EXPLORATORY BORING LOCATIONS SHOULD BE CONSIDERED ACCURATE ONLY TO THE DEGREE IMPLIED BY THE METHOD USED.
5. THE LINES BETWEEN MATERIALS SHOWN ON THE EXPLORATORY BORING LOGS REPRESENT THE APPROXIMATE BOUNDARIES BETWEEN MATERIAL TYPES AND THE TRANSITIONS MAY BE GRADUAL.
6. GROUNDWATER LEVELS SHOWN ON THE LOGS WERE MEASURED AT THE TIME AND UNDER CONDITIONS INDICATED. FLUCTUATIONS IN THE WATER LEVEL MAY OCCUR WITH TIME.
7. LABORATORY TEST RESULTS:
   WC = WATER CONTENT (%) (ASTM D2216);
   DD = DRY DENSITY (pcf) (ASTM D2216);
   +4 = PERCENTAGE RETAINED ON NO. 4 SIEVE (ASTM D6913);
   -200= PERCENTAGE PASSING NO. 200 SIEVE (ASTM D1140);
   LL = LIQUID LIMIT (ASTM D4318);
   PI = PLASTICITY INDEX (ASTM D4318);
   NV = NO LIQUID LIMIT VALUE (ASTM D4318);
   NP = NON-PLASTIC (ASTM D 4318);
   WSS = WATER SOLUBLE SULFATES (%) (CP-L 2103);
   RES = MINIMUM LABORATORY RESISTIVITY (ohm-cm.) (ASTM G57);
   pH = HYDROGEN ION CONCENTRATION (ASTM E70);
   A-2-6 (0) = AASHTO CLASSIFICATION (GROUP INDEX) (AASHTO M145);
   OMC = OPTIMUM MOISTURE CONTENT (%) (ASTM D698);
   MDD = MAXIMUM DRY DENSITY (pcf) (ASTM D698).

LITHOS ENGINEERING

Thornton WATER PROJECT

TWP SEGMENT A,
PROJECT No. 12-777H5

CLIENT

CITY OF THORNTON
12450 WASHINGTON ST,
THORNTON, CO 80241
720.977.6700 tel 000.000.0000 fax
www.thorntonwaterproject.com

CONSULTANT

LITHOS ENGINEERING
2750 S WADSWORTH BLVD, SUITE D-200
DENVER, COLORADO 80227
T 303.625.9502
WWW.LITHOSENG.COM

ISSUE/REVISION

I/R	DATE	DESCRIPTION
A	10/14/2021	95% PREFINAL SUBMITTAL

VERIFIED SCALES

SCALE: NTS

BAR IS ONE INCH ON ORIGINAL DRAWING
0 1"
IF NOT ONE INCH ON THIS SHEET, ADJUST SCALES ACCORDINGLY

DRAWN BY:	JP
CHKD BY:	LH
CHKD BY:	NS
APPD BY:	NS

PROJECT NUMBER

60619101

SHEET TITLE

OPEN-CUT BORING LOGS 5

SHEET NUMBER

DT41

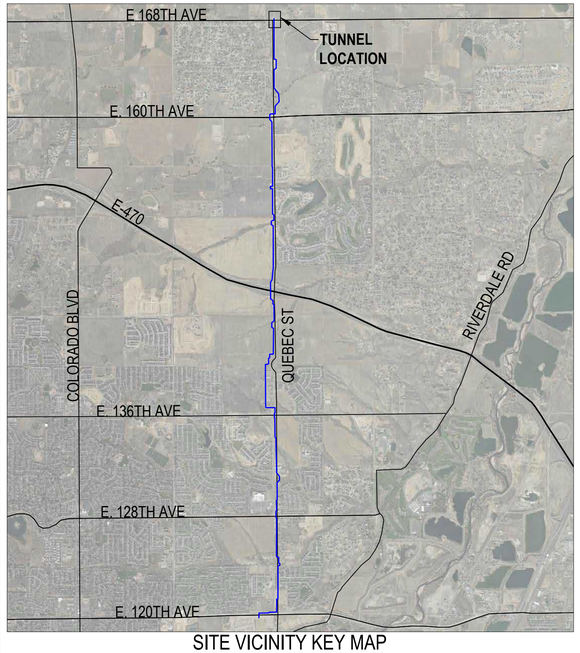

SITE VICINITY KEY MAP

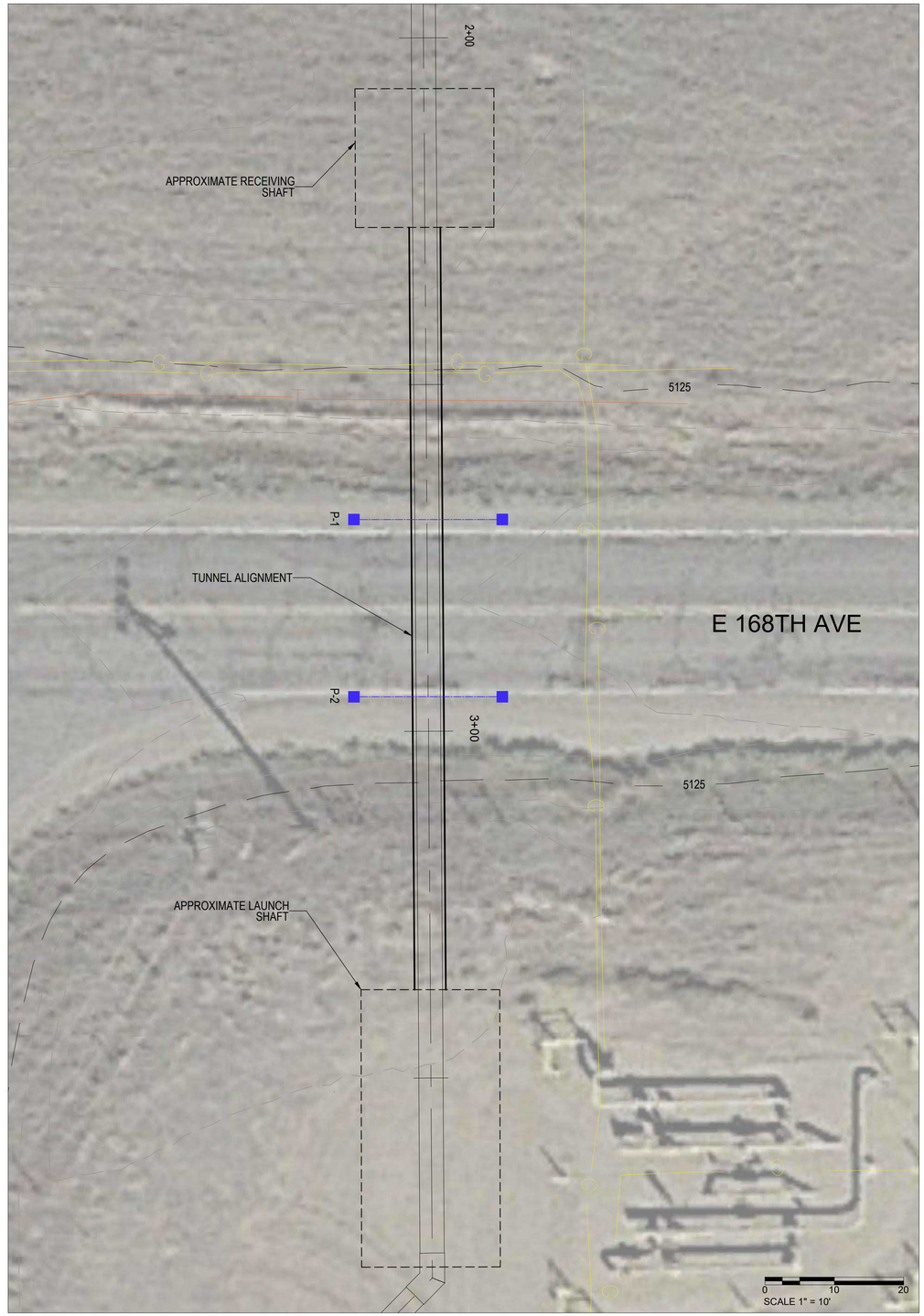

P1 -- INSTRUMENTATION AND MONITORING PLAN
168TH AVE. CROSSING (STA. 2+27.26 TO 3+37.26)

N

GENERAL NOTES:

1) MONITORING ARRAY AND POINT DETAILS ARE PROVIDED ON SHEET IM06.

2) IN GENERAL, ALL MONITORING POINT ARRAYS AND SOIL SURVEY POINTS SHALL BE CENTERED AROUND THE CENTERLINE OF THE PROPOSED WATERLINE AND PERPENDICULAR TO THE TUNNEL ALIGNMENT WITH THE EXCEPTION OF THE SIDEWALK MONITORING ARRAY WHICH SHALL BE ORIENTED AS SHOWN ON SHEET IM05. MONITORING ARRAYS SHALL BE POSITIONED SUCH THAT TRAFFIC IS NOT IMPEDED.

3) UTILITY MONITORING POINTS WITHIN ROADWAYS SHALL HAVE ROAD PLATE COVERS AS SHOWN ON SHEET IM06 TO PREVENT DAMAGE FROM TRAFFIC. ALL UTILITY MONITORING POINTS NOT WITHIN ROADWAYS SHALL BE HOUSED BY A STICK UP COVER AS DETAILED ON SHEET IM06

4) ONLY UTILITIES PERTINENT TO TUNNEL CONSTRUCTION ARE PRESENTED. FOR A COMPLETE LAYOUT OF UTILITIES REFER TO THE PLAN AND PROFILES MENTIONED IN NOTE 5.

5) TUNNEL AND UTILITY LOCATIONS AND OTHER PRESENTED INFORMATION WAS GATHERED FROM THE THORNTON WATER PROJECT SEGMENT A PHASE I 42" Ø RAW WATER PIPELINE 75% SUBMITTAL PLAN AND PROFILES SHEETS PP-01, PP-06, PP-10, PP-12, PP-15, PP-16, PP-23, PP-26, PP-31, AND PP-34 PROVIDED BY AECOM. UTILITY EXTENTS ARE LIMITED BY THIS INFORMATION.

SYMBOLS LEGEND:

- SOIL SURVEY MONITORING POINT ARRAY (S-X)
- SOIL SURVEY MONITORING POINT (SP-X)
- PAVEMENT / SIDEWALK SURVEY MONITORING POINT ARRAY (P-X)/(SW-X)
- UTILITY MONITORING POINTS (U-X)
- PROPOSED TUNNEL ALIGNMENT

RESPONSES TO GEOTECHNICAL COMMENTS FROM THE INTERIM 90% SUBMITTAL AND ANY REVISIONS BASED ON THE RJH GEOTECHNICAL REVIEW WILL BE INCORPORATED INTO THE FINAL SUBMITTAL

NOT FOR CONSTRUCTION - 95%

LITHOS ENGINEERING

TWP SEGMENT A, PROJECT No. 12-777H5

CLIENT

CITY OF THORNTON
12450 WASHINGTON ST,
THORNTON, CO 80241
720.977.6700 tel 000.000.0000 fax
www.thorntonwaterproject.com

CONSULTANT

LITHOS ENGINEERING
2750 S WADSWORTH BLVD, SUITE D-200
DENVER, COLORADO 80227
T 303.625.9502
WWW.LITHOSENG.COM

ISSUE/REVISION

I/R	DATE	DESCRIPTION
B	09/25/2020	35% FINAL SUBMITTAL
A	04/21/2020	35% SUBMITTAL

VERIFIED SCALES

0 10 20
SCALE 1" = 10'

BAR IS ONE INCH ON ORIGINAL DRAWING
0 1"
IF NOT ONE INCH ON THIS SHEET, ADJUST SCALES ACCORDINGLY

DRAWN BY:	DF
CHKD BY:	DF
CHKD BY:	LH
APPD BY:	NS

PROJECT NUMBER

60619101

SHEET TITLE

INSTRUMENTATION AND MONITORING LOCATIONS E 168TH AVE CROSSING

SHEET NUMBER

IM01 OF 83

Z:\Shared\S-Drive\Projects\19049 Thornton RWL - Thornton Reach\Design\Dwgs\I&M Drawing.dwg

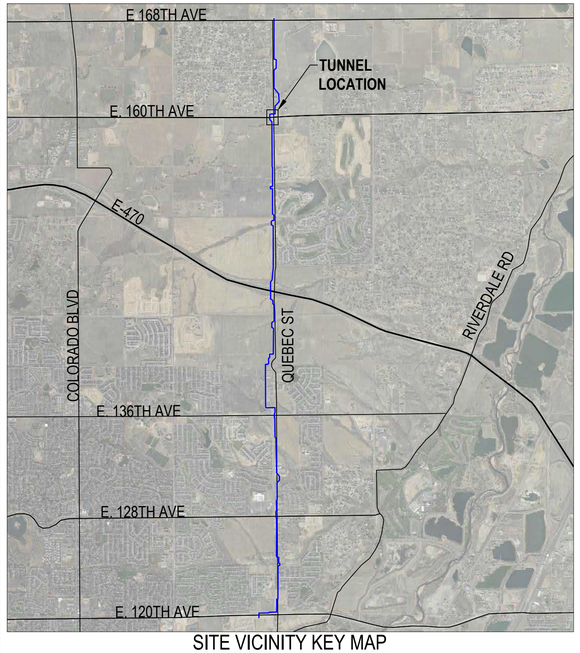

SITE VICINITY KEY MAP

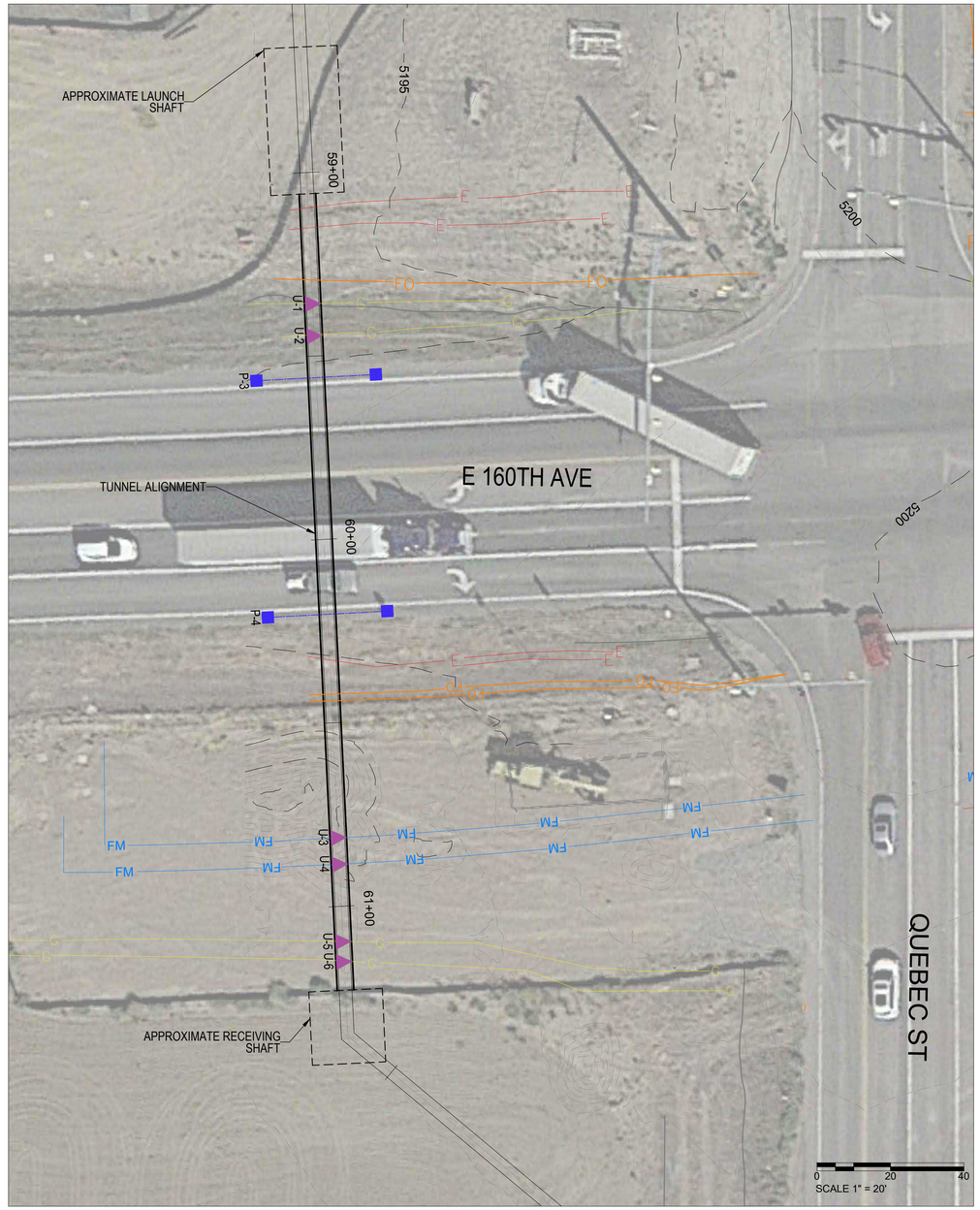

P1 -- INSTRUMENTATION AND MONITORING PLAN
160TH AVE. CROSSING (STA. 59+05.79 TO 61+22.83)

N

GENERAL NOTES:

1) MONITORING ARRAY AND POINT DETAILS ARE PROVIDED ON SHEET IM06.

2) IN GENERAL, ALL MONITORING POINT ARRAYS AND SOIL SURVEY POINTS SHALL BE CENTERED AROUND THE CENTERLINE OF THE PROPOSED WATERLINE AND PERPENDICULAR TO THE TUNNEL ALIGNMENT WITH THE EXCEPTION OF THE SIDEWALK MONITORING ARRAY WHICH SHALL BE ORIENTED AS SHOWN ON SHEET IM05. MONITORING ARRAYS SHALL BE POSITIONED SUCH THAT TRAFFIC IS NOT IMPEDED.

3) UTILITY MONITORING POINTS WITHIN ROADWAYS SHALL HAVE ROAD PLATE COVERS AS SHOWN ON SHEET IM06 TO PREVENT DAMAGE FROM TRAFFIC. ALL UTILITY MONITORING POINTS NOT WITHIN ROADWAYS SHALL BE HOUSED BY A STICK UP COVER AS DETAILED ON SHEET IM06

4) ONLY UTILITIES PERTINENT TO TUNNEL CONSTRUCTION ARE PRESENTED. FOR A COMPLETE LAYOUT OF UTILITIES REFER TO THE PLAN AND PROFILES MENTIONED IN NOTE 5.

5) TUNNEL AND UTILITY LOCATIONS AND OTHER PRESENTED INFORMATION WAS GATHERED FROM THE THORNTON WATER PROJECT SEGMENT A PHASE I 42" Ø RAW WATER PIPELINE 75% SUBMITTAL PLAN AND PROFILES SHEETS PP-01, PP-06, PP-10, PP-12, PP-15, PP-16, PP-23, PP-26, PP-31, AND PP-34 PROVIDED BY AECOM. UTILITY EXTENTS ARE LIMITED BY THIS INFORMATION.

SYMBOLS LEGEND:

- SOIL SURVEY MONITORING POINT ARRAY (S-X)
- SOIL SURVEY MONITORING POINT (SP-X)
- PAVEMENT / SIDEWALK SURVEY MONITORING POINT ARRAY (P-X)/(SW-X)
- UTILITY MONITORING POINTS (U-X)
- PROPOSED TUNNEL ALIGNMENT

RESPONSES TO GEOTECHNICAL COMMENTS FROM THE INTERIM 90% SUBMITTAL AND ANY REVISIONS BASED ON THE RJH GEOTECHNICAL REVIEW WILL BE INCORPORATED INTO THE FINAL SUBMITTAL

NOT FOR CONSTRUCTION - 95%

LITHOS ENGINEERING

TWP SEGMENT A,
PROJECT No. 12-777H5

CLIENT

CITY OF THORNTON
12450 WASHINGTON ST,
THORNTON, CO 80241
720.977.6700 tel 000.000.0000 fax
www.thorntonwaterproject.com

CONSULTANT

LITHOS ENGINEERING
2750 S WADSWORTH BLVD, SUITE D-200
DENVER, COLORADO 80227
T 303.625.9502
WWW.LITHOSENG.COM

ISSUE/REVISION

I/R	DATE	DESCRIPTION
B	09/25/2020	35% FINAL SUBMITTAL
A	04/21/2020	35% SUBMITTAL

VERIFIED SCALES

0 20 40
SCALE 1" = 20'

BAR IS ONE INCH ON ORIGINAL DRAWING
0 1"
IF NOT ONE INCH ON THIS SHEET, ADJUST SCALES ACCORDINGLY

DRAWN BY:	DF
CHKD BY:	DF
CHKD BY:	LH
APPD BY:	NS

PROJECT NUMBER

60619101

SHEET TITLE

INSTRUMENTATION AND MONITORING LOCATIONS E 160TH AVE CROSSING

SHEET NUMBER

IM02

Z:\Shared\S-Drive\Projects\19049 Thornton RWL - Thornton Reach\Design\Dwgs\I&M Drawing.dwg

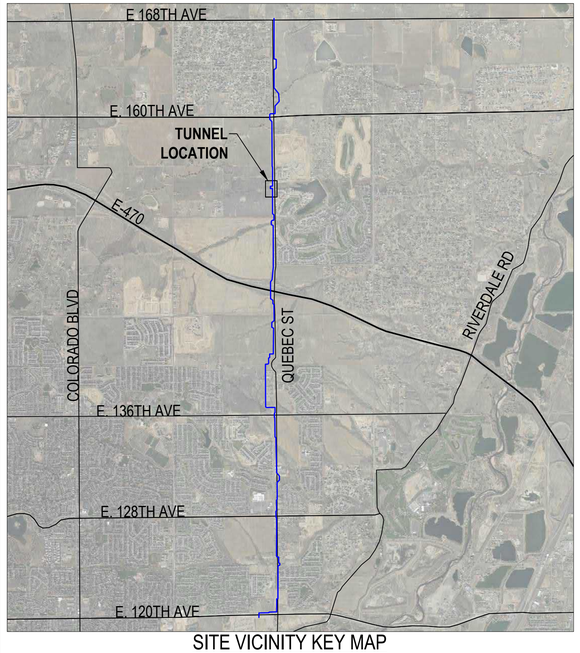

SITE VICINITY KEY MAP

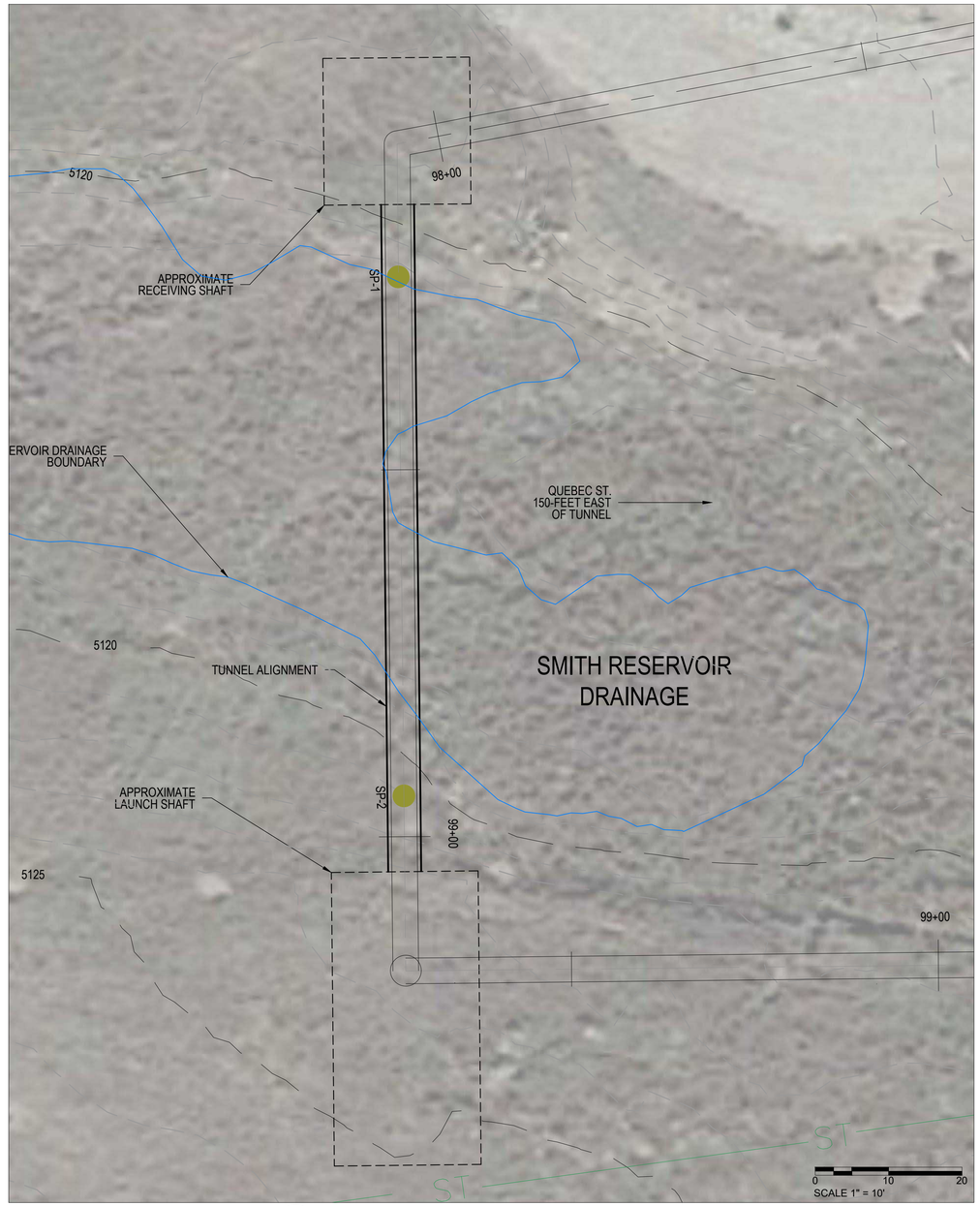

P1 -- INSTRUMENTATION AND MONITORING PLAN

SMITH RESERVOIR FLOODPLAIN CROSSING (STA. 98+13.88 TO 99+04.76)

N

GENERAL NOTES:

1) MONITORING ARRAY AND POINT DETAILS ARE PROVIDED ON SHEET IM06.

2) IN GENERAL, ALL MONITORING POINT ARRAYS AND SOIL SURVEY POINTS SHALL BE CENTERED AROUND THE CENTERLINE OF THE PROPOSED WATERLINE AND PERPENDICULAR TO THE TUNNEL ALIGNMENT WITH THE EXCEPTION OF THE SIDEWALK MONITORING ARRAY WHICH SHALL BE ORIENTED AS SHOWN ON SHEET IM05. MONITORING ARRAYS SHALL BE POSITIONED SUCH THAT TRAFFIC IS NOT IMPEDED.

3) UTILITY MONITORING POINTS WITHIN ROADWAYS SHALL HAVE ROAD PLATE COVERS AS SHOWN ON SHEET IM06 TO PREVENT DAMAGE FROM TRAFFIC. ALL UTILITY MONITORING POINTS NOT WITHIN ROADWAYS SHALL BE HOUSED BY A STICK UP COVER AS DETAILED ON SHEET IM06

4) ONLY UTILITIES PERTINENT TO TUNNEL CONSTRUCTION ARE PRESENTED. FOR A COMPLETE LAYOUT OF UTILITIES REFER TO THE PLAN AND PROFILES MENTIONED IN NOTE 5.

5) TUNNEL AND UTILITY LOCATIONS AND OTHER PRESENTED INFORMATION WAS GATHERED FROM THE THORNTON WATER PROJECT SEGMENT A PHASE I 42" Ø RAW WATER PIPELINE 75% SUBMITTAL PLAN AND PROFILES SHEETS PP-01, PP-06, PP-10, PP-12, PP-15, PP-16, PP-23, PP-26, PP-31, AND PP-34 PROVIDED BY AECOM. UTILITY EXTENTS ARE LIMITED BY THIS INFORMATION.

SYMBOLS LEGEND:

- SOIL SURVEY MONITORING POINT ARRAY (S-X)
- SOIL SURVEY MONITORING POINT (SP-X)
- PAVEMENT / SIDEWALK SURVEY MONITORING POINT ARRAY (P-X)/(SW-X)
- UTILITY MONITORING POINTS (U-X)
- PROPOSED TUNNEL ALIGNMENT

RESPONSES TO GEOTECHNICAL COMMENTS FROM THE INTERIM 90% SUBMITTAL AND ANY REVISIONS BASED ON THE RJH GEOTECHNICAL REVIEW WILL BE INCORPORATED INTO THE FINAL SUBMITTAL

NOT FOR CONSTRUCTION - 95%

LITHOS ENGINEERING

TWP SEGMENT A, PROJECT No. 12-777H5

CLIENT

CITY OF THORNTON
12450 WASHINGTON ST,
THORNTON, CO 80241
720.977.6700 tel 000.000.0000 fax
www.thorntonwaterproject.com

CONSULTANT

LITHOS ENGINEERING
2750 S WADSWORTH BLVD, SUITE D-200
DENVER, COLORADO 80227
T 303.625.9502
WWW.LITHOSENG.COM

ISSUE/REVISION

I/R	DATE	DESCRIPTION
B	09/25/2020	35% FINAL SUBMITTAL
A	04/21/2020	35% SUBMITTAL

VERIFIED SCALES

0 10 20
SCALE 1" = 10'

BAR IS ONE INCH ON ORIGINAL DRAWING
0 1"
IF NOT ONE INCH ON THIS SHEET, ADJUST SCALES ACCORDINGLY

DRAWN BY:	DF
CHKD BY:	DF
CHKD BY:	LH
APPD BY:	NS

PROJECT NUMBER

60619101

SHEET TITLE

INSTRUMENTATION AND MONITORING LOCATIONS SMITH RESERVOIR FLOODPLAIN CROSSING

SHEET NUMBER

IM03 OF 83

Z:\Shared\S-Drive\Projects\19049 Thornton RWL - Thornton Reach\Design\Dwgs\I&M Drawing.dwg

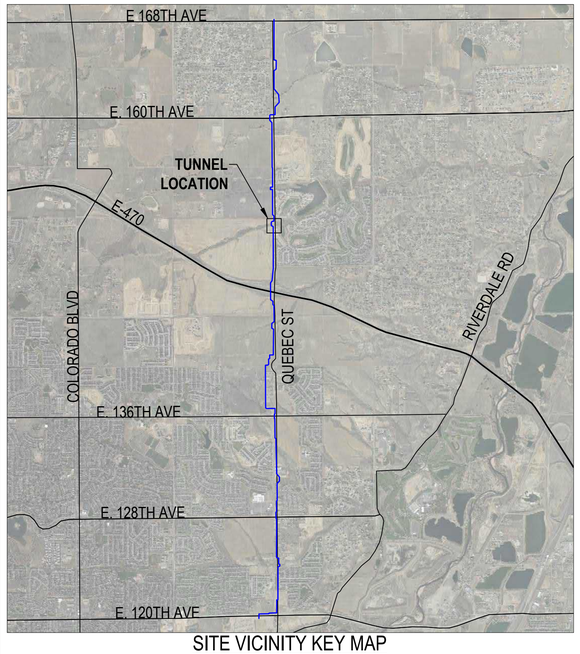

SITE VICINITY KEY MAP

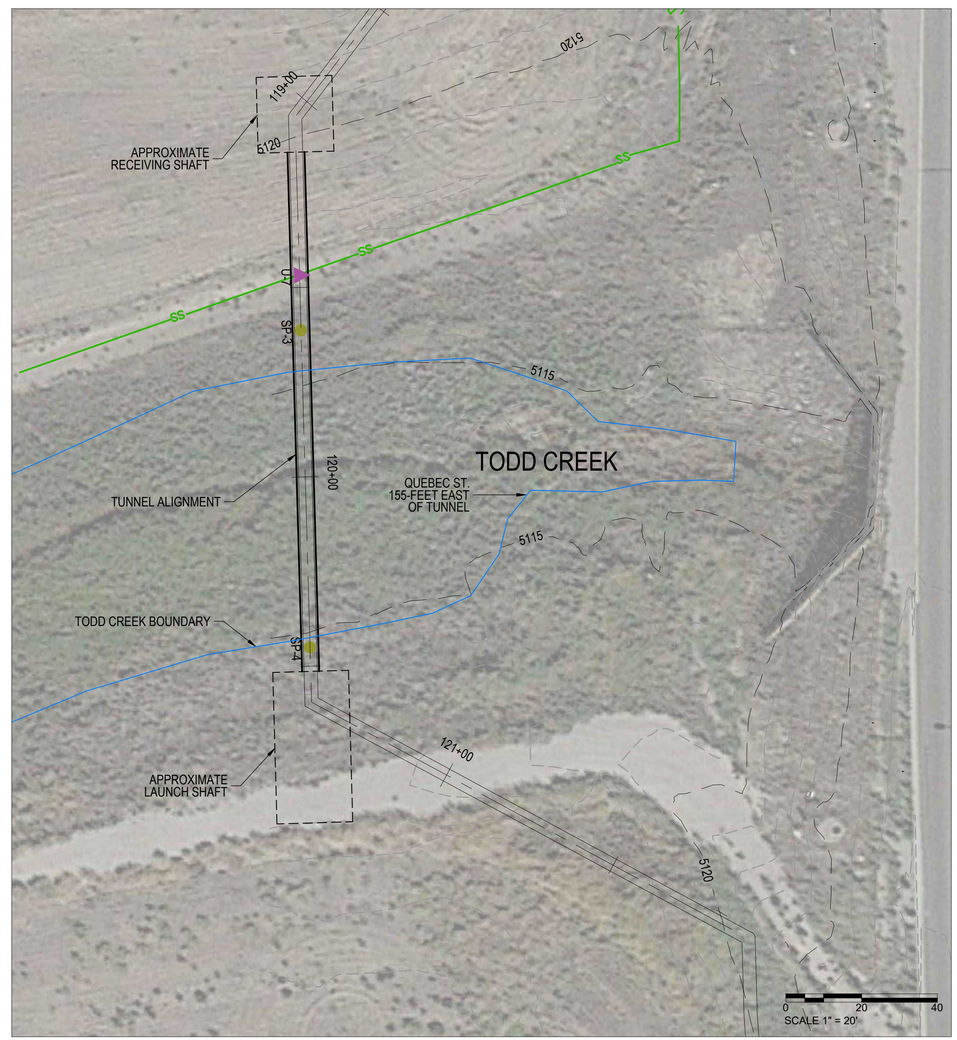

P1 -- INSTRUMENTATION AND MONITORING PLAN
TODD CREEK CROSSING (STA. 119+14.26 TO 120+51.49)

N

GENERAL NOTES:

1) MONITORING ARRAY AND POINT DETAILS ARE PROVIDED ON SHEET IM06.

2) IN GENERAL, ALL MONITORING POINT ARRAYS AND SOIL SURVEY POINTS SHALL BE CENTERED AROUND THE CENTERLINE OF THE PROPOSED WATERLINE AND PERPENDICULAR TO THE TUNNEL ALIGNMENT WITH THE EXCEPTION OF THE SIDEWALK MONITORING ARRAY WHICH SHALL BE ORIENTED AS SHOWN ON SHEET IM05. MONITORING ARRAYS SHALL BE POSITIONED SUCH THAT TRAFFIC IS NOT IMPEDED.

3) UTILITY MONITORING POINTS WITHIN ROADWAYS SHALL HAVE ROAD PLATE COVERS AS SHOWN ON SHEET IM06 TO PREVENT DAMAGE FROM TRAFFIC. ALL UTILITY MONITORING POINTS NOT WITHIN ROADWAYS SHALL BE HOUSED BY A STICK UP COVER AS DETAILED ON SHEET IM06

4) ONLY UTILITIES PERTINENT TO TUNNEL CONSTRUCTION ARE PRESENTED. FOR A COMPLETE LAYOUT OF UTILITIES REFER TO THE PLAN AND PROFILES MENTIONED IN NOTE 5.

5) TUNNEL AND UTILITY LOCATIONS AND OTHER PRESENTED INFORMATION WAS GATHERED FROM THE THORNTON WATER PROJECT SEGMENT A PHASE I 42" Ø RAW WATER PIPELINE 75% SUBMITTAL PLAN AND PROFILES SHEETS PP-01, PP-06, PP-10, PP-12, PP-15, PP-16, PP-23, PP-26, PP-31, AND PP-34 PROVIDED BY AECOM. UTILITY EXTENTS ARE LIMITED BY THIS INFORMATION.

SYMBOLS LEGEND:

- SOIL SURVEY MONITORING POINT ARRAY (S-X)
- SOIL SURVEY MONITORING POINT (SP-X)
- PAVEMENT / SIDEWALK SURVEY MONITORING POINT ARRAY (P-X)/(SW-X)
- UTILITY MONITORING POINTS (U-X)
- PROPOSED TUNNEL ALIGNMENT

RESPONSES TO GEOTECHNICAL COMMENTS FROM THE INTERIM 90% SUBMITTAL AND ANY REVISIONS BASED ON THE RJH GEOTECHNICAL REVIEW WILL BE INCORPORATED INTO THE FINAL SUBMITTAL

NOT FOR CONSTRUCTION - 95%

LITHOS ENGINEERING

TWP SEGMENT A,
PROJECT No. 12-777H5

CLIENT

CITY OF THORNTON
12450 WASHINGTON ST,
THORNTON, CO 80241
720.977.6700 tel 000.000.0000 fax
www.thorntonwaterproject.com

CONSULTANT

LITHOS ENGINEERING
2750 S WADSWORTH BLVD, SUITE D-200
DENVER, COLORADO 80227
T 303.625.9502
WWW.LITHOSENG.COM

ISSUE/REVISION

I/R	DATE	DESCRIPTION
B	09/25/2020	35% FINAL SUBMITTAL
A	04/21/2020	35% SUBMITTAL

VERIFIED SCALES

0 20 40
SCALE 1" = 20'

BAR IS ONE INCH ON ORIGINAL DRAWING
0 1"
IF NOT ONE INCH ON THIS SHEET, ADJUST SCALES ACCORDINGLY

DRAWN BY:	DF
CHKD BY:	DF
CHKD BY:	LH
APPD BY:	NS

PROJECT NUMBER

60619101

SHEET TITLE

INSTRUMENTATION AND MONITORING LOCATIONS TODD CREEK CROSSING

SHEET NUMBER

IM04 OF 83

Z:\Shared\S-Drive\Projects\19049 Thornton RWL - Thornton Reach\Design\Dwgs\I&M Drawing.dwg

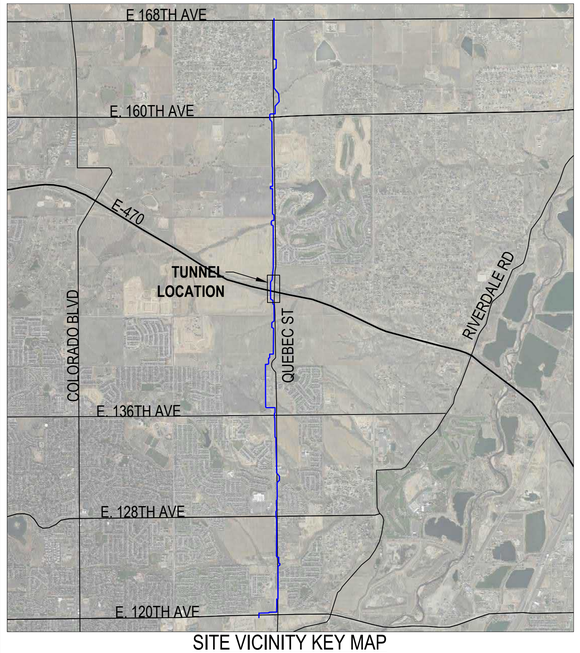

SITE VICINITY KEY MAP

SYMBOLS LEGEND:

- SOIL SURVEY MONITORING POINT ARRAY (S-X)
- SOIL SURVEY MONITORING POINT (SP-X)
- PAVEMENT / SIDEWALK SURVEY MONITORING POINT ARRAY (P-X)/(SW-X)
- UTILITY MONITORING POINTS (U-X)
- PROPOSED TUNNEL ALIGNMENT

GENERAL NOTES:

1) MONITORING ARRAY AND POINT DETAILS ARE PROVIDED ON SHEET IM06.

2) IN GENERAL, ALL MONITORING POINT ARRAYS AND SOIL SURVEY POINTS SHALL BE CENTERED AROUND THE CENTERLINE OF THE PROPOSED WATERLINE AND PERPENDICULAR TO THE TUNNEL ALIGNMENT WITH THE EXCEPTION OF THE SIDEWALK MONITORING ARRAY WHICH SHALL BE ORIENTED AS SHOWN ON SHEET IM05. MONITORING ARRAYS SHALL BE POSITIONED SUCH THAT TRAFFIC IS NOT IMPEDED.

3) UTILITY MONITORING POINTS WITHIN ROADWAYS SHALL HAVE ROAD PLATE COVERS AS SHOWN ON SHEET IM06 TO PREVENT DAMAGE FROM TRAFFIC. ALL UTILITY MONITORING POINTS NOT WITHIN ROADWAYS SHALL BE HOUSED BY A STICK UP COVER AS DETAILED ON SHEET IM06

4) ONLY UTILITIES PERTINENT TO TUNNEL CONSTRUCTION ARE PRESENTED. FOR A COMPLETE LAYOUT OF UTILITIES REFER TO THE PLAN AND PROFILES MENTIONED IN NOTE 5.

5) TUNNEL AND UTILITY LOCATIONS AND OTHER PRESENTED INFORMATION WAS GATHERED FROM THE THORNTON WATER PROJECT SEGMENT A PHASE I 42" Ø RAW WATER PIPELINE 75% SUBMITTAL PLAN AND PROFILES SHEETS PP-01, PP-06, PP-10, PP-12, PP-15, PP-16, PP-23, PP-26, PP-31, AND PP-34 PROVIDED BY AECOM. UTILITY EXTENTS ARE LIMITED BY THIS INFORMATION.

RESPONSES TO GEOTECHNICAL COMMENTS FROM THE INTERIM 90% SUBMITTAL AND ANY REVISIONS BASED ON THE RJH GEOTECHNICAL REVIEW WILL BE INCORPORATED INTO THE FINAL SUBMITTAL

N

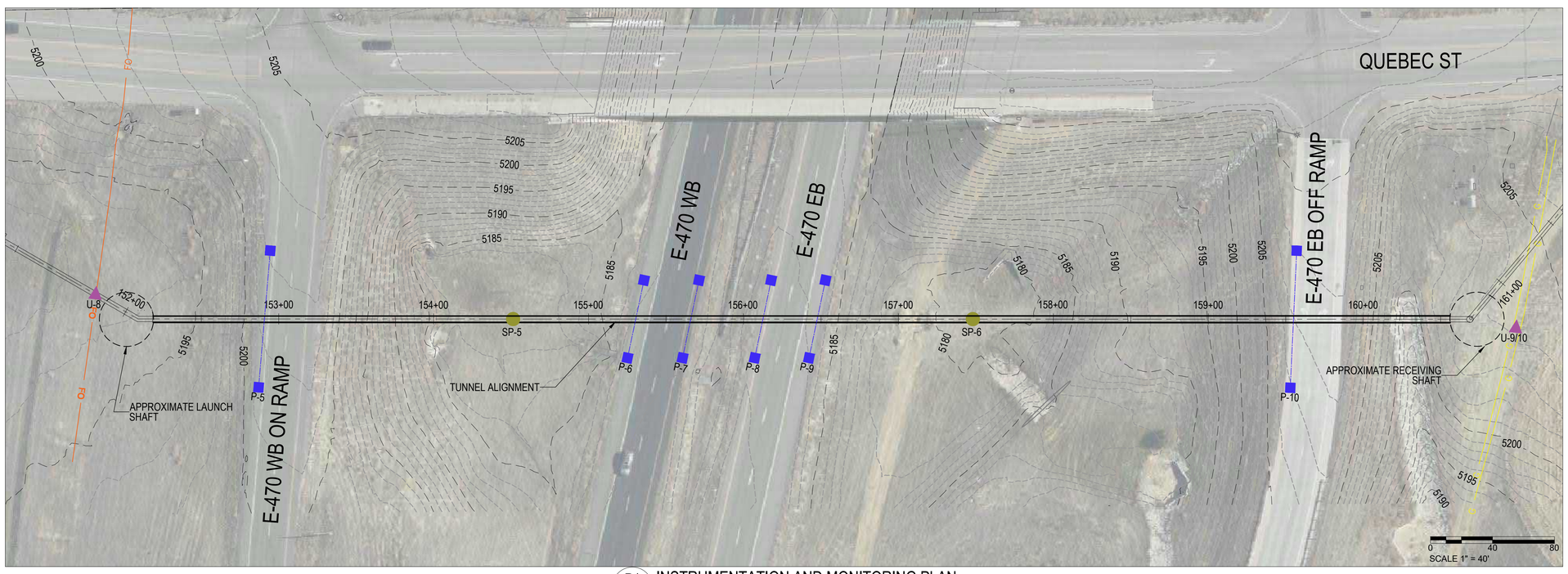

P1 -- INSTRUMENTATION AND MONITORING PLAN
E470 CROSSING (STA. 152+19.23 TO 160+56.06)

NOT FOR CONSTRUCTION - 95%

Z:\Shared\S-Drive\Projects\19049 Thornton RWL - Thornton Reach\Design\Dwgs\I&M Drawing.dwg

LITHOS ENGINEERING

TWP SEGMENT A, PROJECT No. 12-777H5

CLIENT

CITY OF THORNTON
12450 WASHINGTON ST,
THORNTON, CO 80241
720.977.6700 tel 000.000.0000 fax
www.thorntonwaterproject.com

CONSULTANT

LITHOS ENGINEERING
2750 S WADSWORTH BLVD, SUITE D-200
DENVER, COLORADO 80227
T 303.625.9502
WWW.LITHOSENG.COM

ISSUE/REVISION

I/R	DATE	DESCRIPTION
B	09/25/2020	35% FINAL SUBMITTAL
A	04/21/2020	35% SUBMITTAL

VERIFIED SCALES

0 40 80
SCALE 1" = 40'

BAR IS ONE INCH ON ORIGINAL DRAWING
0 1"
IF NOT ONE INCH ON THIS SHEET, ADJUST SCALES ACCORDINGLY

DRAWN BY:	DF
CHKD BY:	DF
CHKD BY:	LH
APPD BY:	NS

PROJECT NUMBER

60619101

SHEET TITLE

INSTRUMENTATION AND MONITORING LOCATIONS E-470 CROSSING

SHEET NUMBER

IM05 OF 83

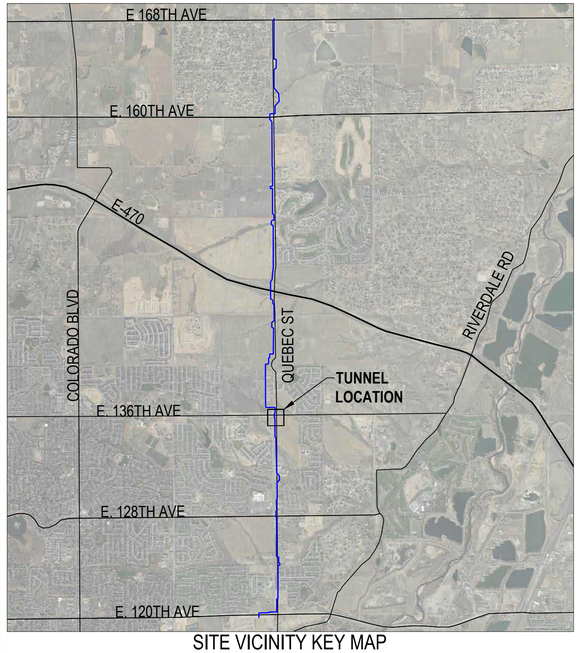

SITE VICINITY KEY MAP

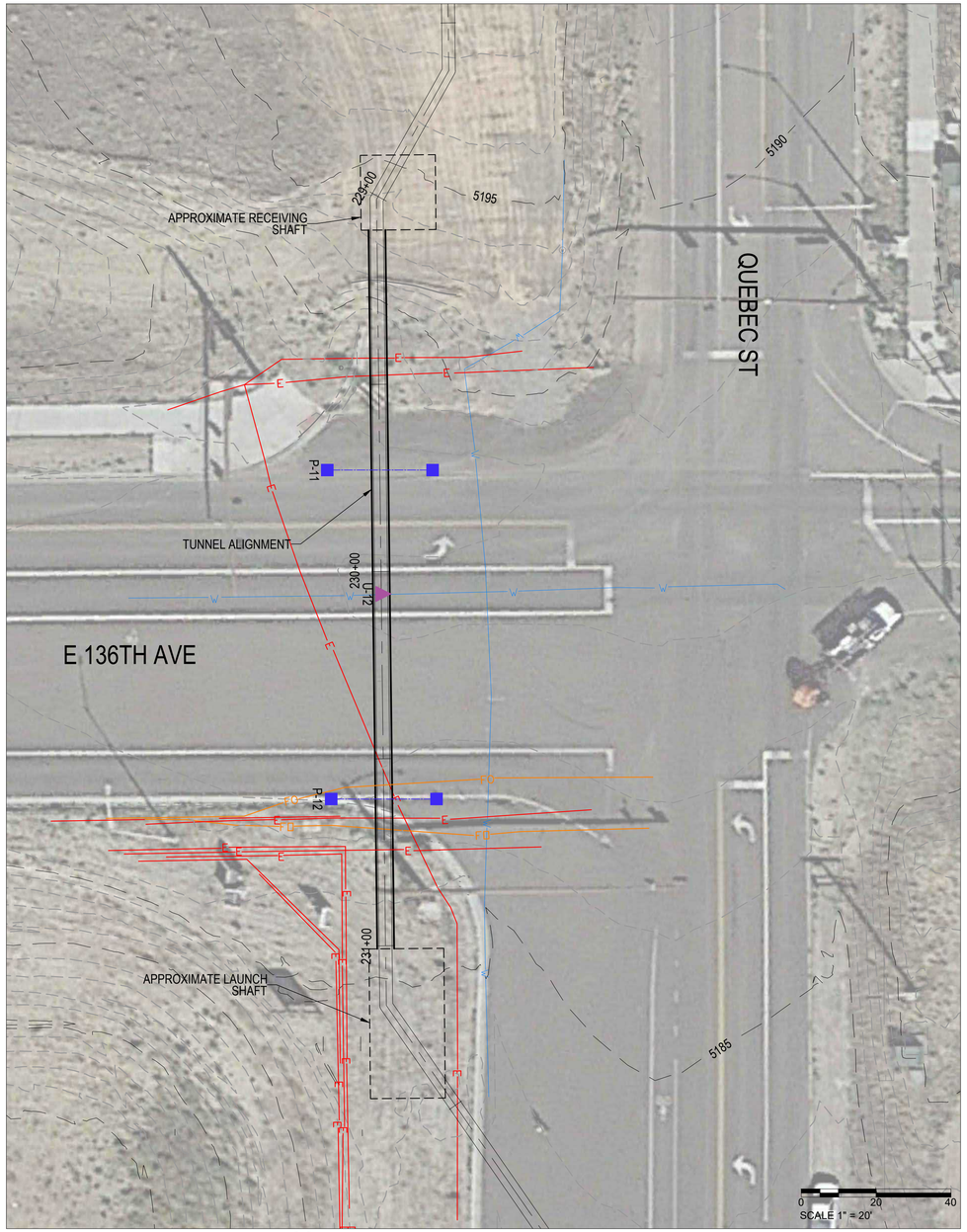

P1 -- INSTRUMENTATION AND MONITORING PLAN
E 136TH AVE. CROSSING (STA. 229+09.01 TO 231+00.79)

N

GENERAL NOTES:

1) MONITORING ARRAY AND POINT DETAILS ARE PROVIDED ON SHEET IM06.

2) IN GENERAL, ALL MONITORING POINT ARRAYS AND SOIL SURVEY POINTS SHALL BE CENTERED AROUND THE CENTERLINE OF THE PROPOSED WATERLINE AND PERPENDICULAR TO THE TUNNEL ALIGNMENT WITH THE EXCEPTION OF THE SIDEWALK MONITORING ARRAY WHICH SHALL BE ORIENTED AS SHOWN ON SHEET IM05. MONITORING ARRAYS SHALL BE POSITIONED SUCH THAT TRAFFIC IS NOT IMPEDED.

3) UTILITY MONITORING POINTS WITHIN ROADWAYS SHALL HAVE ROAD PLATE COVERS AS SHOWN ON SHEET IM06 TO PREVENT DAMAGE FROM TRAFFIC. ALL UTILITY MONITORING POINTS NOT WITHIN ROADWAYS SHALL BE HOUSED BY A STICK UP COVER AS DETAILED ON SHEET IM06

4) ONLY UTILITIES PERTINENT TO TUNNEL CONSTRUCTION ARE PRESENTED. FOR A COMPLETE LAYOUT OF UTILITIES REFER TO THE PLAN AND PROFILES MENTIONED IN NOTE 5.

5) TUNNEL AND UTILITY LOCATIONS AND OTHER PRESENTED INFORMATION WAS GATHERED FROM THE THORNTON WATER PROJECT SEGMENT A PHASE I 42" Ø RAW WATER PIPELINE 75% SUBMITTAL PLAN AND PROFILES SHEETS PP-01, PP-06, PP-10, PP-12, PP-15, PP-16, PP-23, PP-26, PP-31, AND PP-34 PROVIDED BY AECOM. UTILITY EXTENTS ARE LIMITED BY THIS INFORMATION.

SYMBOLS LEGEND:

- SOIL SURVEY MONITORING POINT ARRAY (S-X)
- SOIL SURVEY MONITORING POINT (SP-X)
- PAVEMENT / SIDEWALK SURVEY MONITORING POINT ARRAY (P-X)/(SW-X)
- UTILITY MONITORING POINTS (U-X)
- PROPOSED TUNNEL ALIGNMENT

RESPONSES TO GEOTECHNICAL COMMENTS FROM THE INTERIM 90% SUBMITTAL AND ANY REVISIONS BASED ON THE RJH GEOTECHNICAL REVIEW WILL BE INCORPORATED INTO THE FINAL SUBMITTAL

NOT FOR CONSTRUCTION - 95%

LITHOS ENGINEERING

TWP SEGMENT A,
PROJECT No. 12-777H5

CLIENT

CITY OF THORNTON
12450 WASHINGTON ST,
THORNTON, CO 80241
720.977.6700 tel 000.000.0000 fax
www.thorntonwaterproject.com

CONSULTANT

LITHOS ENGINEERING
2750 S WADSWORTH BLVD, SUITE D-200
DENVER, COLORADO 80227
T 303.625.9502
WWW.LITHOSENG.COM

ISSUE/REVISION

I/R	DATE	DESCRIPTION
B	09/25/2020	35% FINAL SUBMITTAL
A	04/21/2020	35% SUBMITTAL

VERIFIED SCALES

0 20 40
SCALE 1" = 20'

BAR IS ONE INCH ON ORIGINAL DRAWING
0 1"
IF NOT ONE INCH ON THIS SHEET, ADJUST SCALES ACCORDINGLY

DRAWN BY:	DF
CHKD BY:	DF
CHKD BY:	LH
APPD BY:	NS

PROJECT NUMBER

60619101

SHEET TITLE

INSTRUMENTATION AND MONITORING LOCATIONS E 136TH AVE CROSSING

SHEET NUMBER

IM06 OF 83

Z:\Shared\S-Drive\Projects\19049 Thornton RWL - Thornton Reach\Design\Dwgs\I&M Drawing.dwg

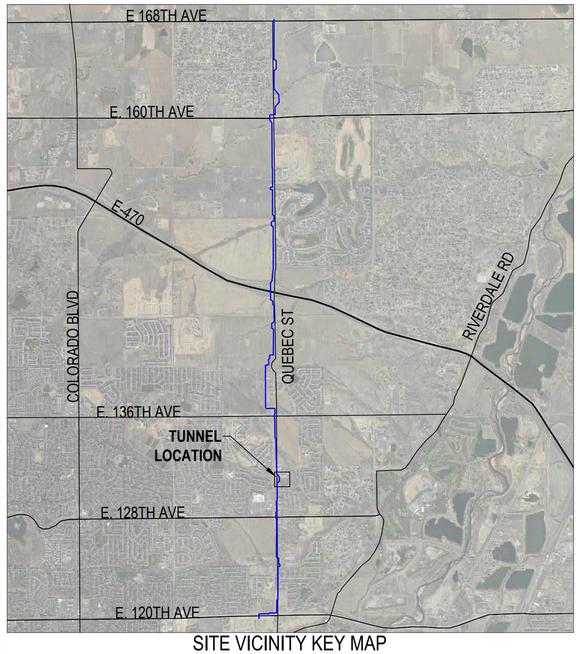

SITE VICINITY KEY MAP

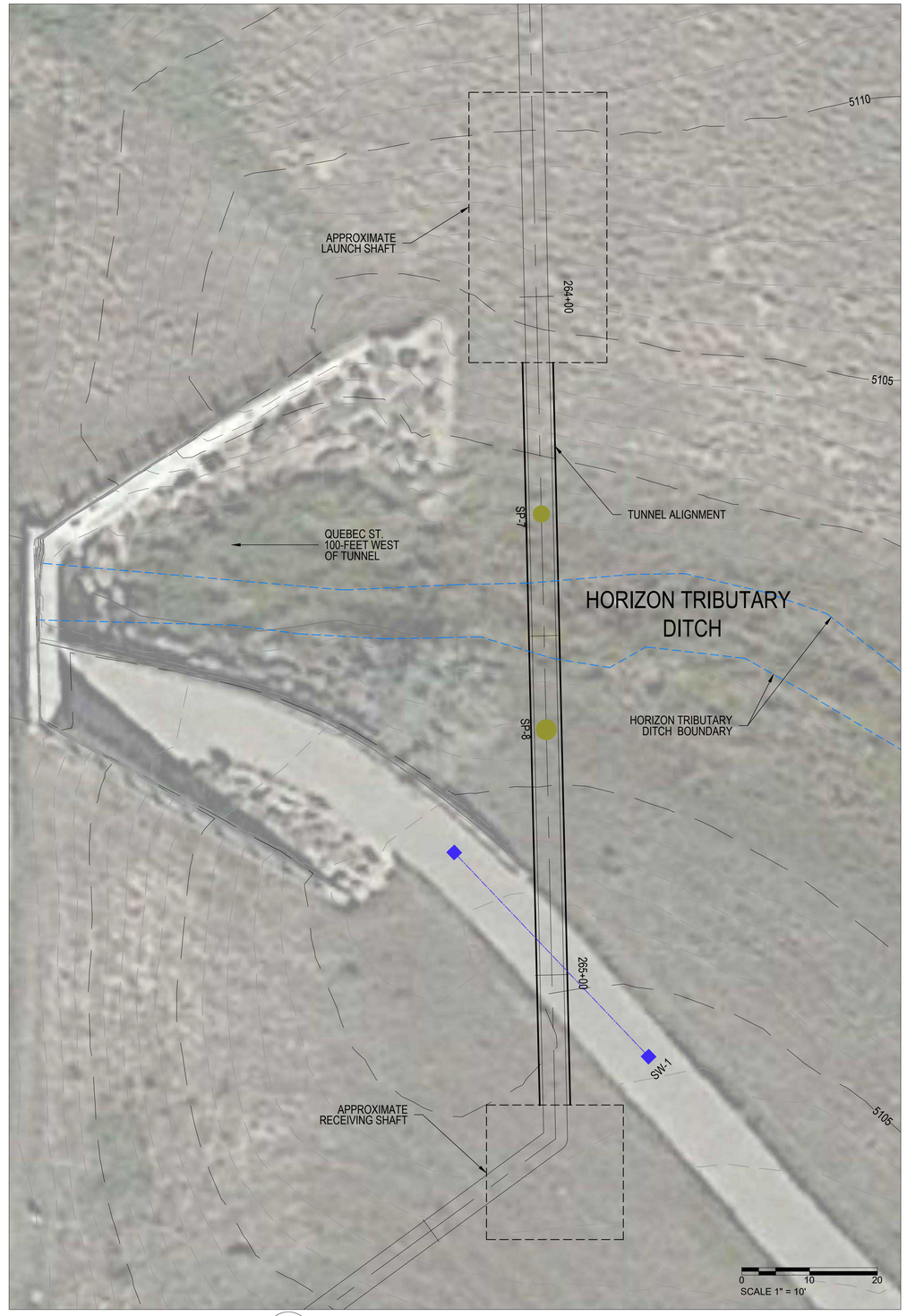

P1 -- INSTRUMENTATION AND MONITORING PLAN
HORIZON DITCH CROSSING (STA. 264+09.71 TO 265+19.18)

N

GENERAL NOTES:

1) MONITORING ARRAY AND POINT DETAILS ARE PROVIDED ON SHEET IM06.

2) IN GENERAL, ALL MONITORING POINT ARRAYS AND SOIL SURVEY POINTS SHALL BE CENTERED AROUND THE CENTERLINE OF THE PROPOSED WATERLINE AND PERPENDICULAR TO THE TUNNEL ALIGNMENT WITH THE EXCEPTION OF THE SIDEWALK MONITORING ARRAY WHICH SHALL BE ORIENTED AS SHOWN ON SHEET IM05. MONITORING ARRAYS SHALL BE POSITIONED SUCH THAT TRAFFIC IS NOT IMPEDED.

3) UTILITY MONITORING POINTS WITHIN ROADWAYS SHALL HAVE ROAD PLATE COVERS AS SHOWN ON SHEET IM06 TO PREVENT DAMAGE FROM TRAFFIC. ALL UTILITY MONITORING POINTS NOT WITHIN ROADWAYS SHALL BE HOUSED BY A STICK UP COVER AS DETAILED ON SHEET IM06

4) ONLY UTILITIES PERTINENT TO TUNNEL CONSTRUCTION ARE PRESENTED. FOR A COMPLETE LAYOUT OF UTILITIES REFER TO THE PLAN AND PROFILES MENTIONED IN NOTE 5.

5) TUNNEL AND UTILITY LOCATIONS AND OTHER PRESENTED INFORMATION WAS GATHERED FROM THE THORNTON WATER PROJECT SEGMENT A PHASE I 42" Ø RAW WATER PIPELINE 75% SUBMITTAL PLAN AND PROFILES SHEETS PP-01, PP-06, PP-10, PP-12, PP-15, PP-16, PP-23, PP-26, PP-31, AND PP-34 PROVIDED BY AECOM. UTILITY EXTENTS ARE LIMITED BY THIS INFORMATION.

SYMBOLS LEGEND:

- SOIL SURVEY MONITORING POINT ARRAY (S-X)
- SOIL SURVEY MONITORING POINT (SP-X)
- PAVEMENT / SIDEWALK SURVEY MONITORING POINT ARRAY (P-X)/(SW-X)
- UTILITY MONITORING POINTS (U-X)
- PROPOSED TUNNEL ALIGNMENT

RESPONSES TO GEOTECHNICAL COMMENTS FROM THE INTERIM 90% SUBMITTAL AND ANY REVISIONS BASED ON THE RJH GEOTECHNICAL REVIEW WILL BE INCORPORATED INTO THE FINAL SUBMITTAL

NOT FOR CONSTRUCTION - 95%

LITHOS ENGINEERING

TWP SEGMENT A,
PROJECT No. 12-777H5

CLIENT

CITY OF THORNTON
12450 WASHINGTON ST,
THORNTON, CO 80241
720.977.6700 tel 000.000.0000 fax
www.thorntonwaterproject.com

CONSULTANT

LITHOS ENGINEERING
2750 S WADSWORTH BLVD, SUITE D-200
DENVER, COLORADO 80227
T 303.625.9502
WWW.LITHOSENG.COM

ISSUE/REVISION

I/R	DATE	DESCRIPTION
B	09/25/2020	35% FINAL SUBMITTAL
A	04/21/2020	35% SUBMITTAL

VERIFIED SCALES

0 10 20
SCALE 1" = 10'

BAR IS ONE INCH ON ORIGINAL DRAWING
0 1"
IF NOT ONE INCH ON THIS SHEET, ADJUST SCALES ACCORDINGLY

DRAWN BY:	DF
CHKD BY:	DF
CHKD BY:	LH
APPD BY:	NS

PROJECT NUMBER

60619101

SHEET TITLE

INSTRUMENTATION AND MONITORING LOCATIONS
HORIZON TRIBUTARY DITCH CROSSING

SHEET NUMBER

IM07 OF 83

Z:\Shared\S-Drive\Projects\19\049 Thornton RWL - Thornton Reach\Design\Dwgs\I&M Drawing.dwg

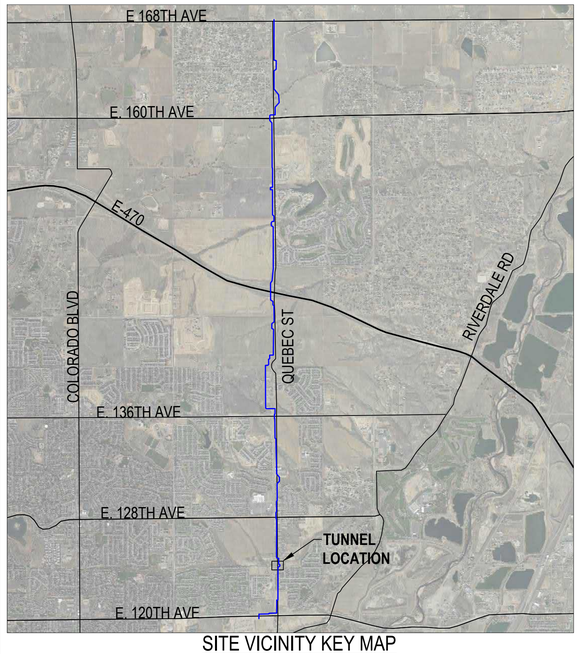

SITE VICINITY KEY MAP

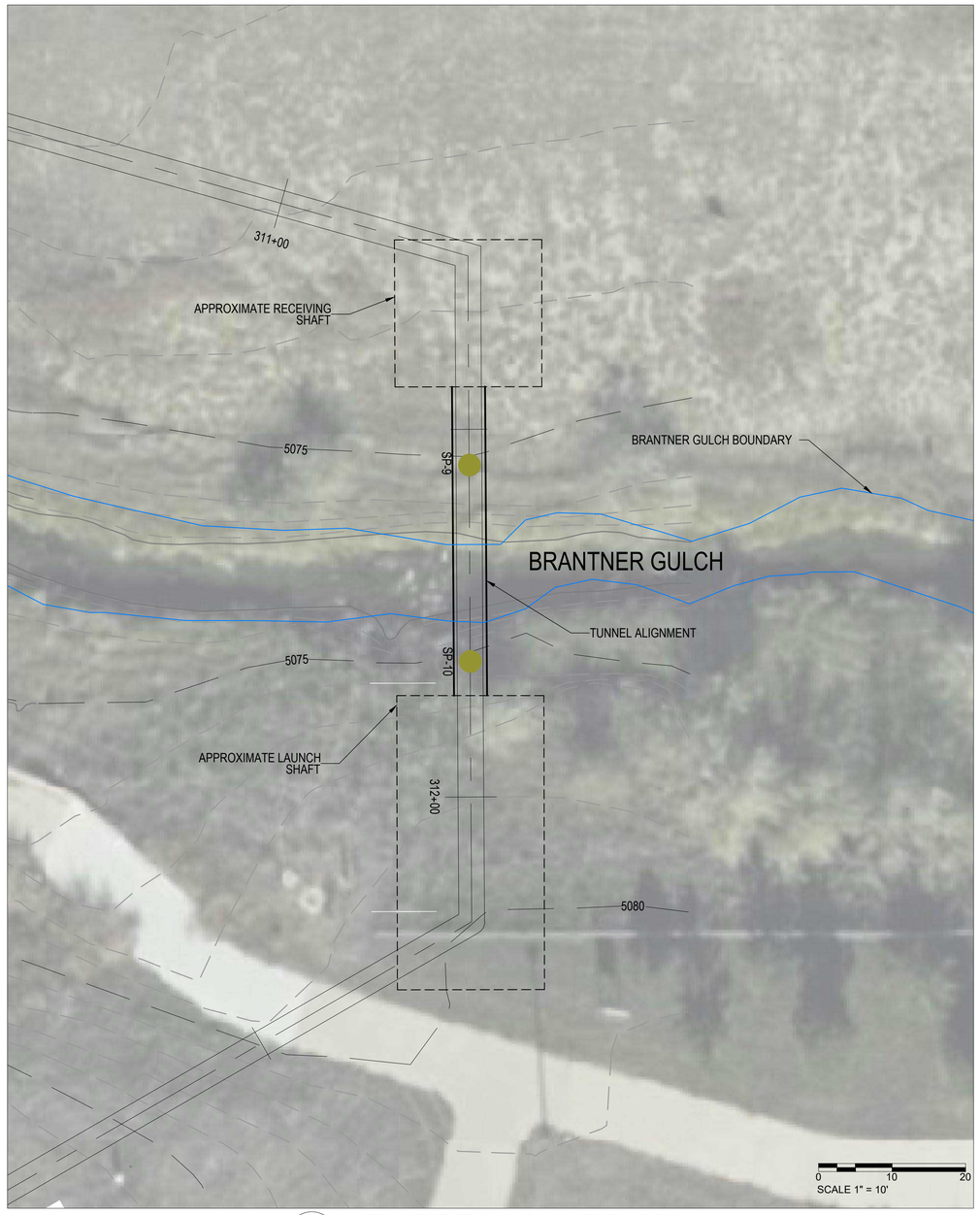

P1 -- INSTRUMENTATION AND MONITORING PLAN
BRANTNER GULCH CROSSING (STA. 311+44.18 TO 311+86.21)

N

GENERAL NOTES:

1) MONITORING ARRAY AND POINT DETAILS ARE PROVIDED ON SHEET IM06.

2) IN GENERAL, ALL MONITORING POINT ARRAYS AND SOIL SURVEY POINTS SHALL BE CENTERED AROUND THE CENTERLINE OF THE PROPOSED WATERLINE AND PERPENDICULAR TO THE TUNNEL ALIGNMENT WITH THE EXCEPTION OF THE SIDEWALK MONITORING ARRAY WHICH SHALL BE ORIENTED AS SHOWN ON SHEET IM05. MONITORING ARRAYS SHALL BE POSITIONED SUCH THAT TRAFFIC IS NOT IMPEDED.

3) UTILITY MONITORING POINTS WITHIN ROADWAYS SHALL HAVE ROAD PLATE COVERS AS SHOWN ON SHEET IM06 TO PREVENT DAMAGE FROM TRAFFIC. ALL UTILITY MONITORING POINTS NOT WITHIN ROADWAYS SHALL BE HOUSED BY A STICK UP COVER AS DETAILED ON SHEET IM06

4) ONLY UTILITIES PERTINENT TO TUNNEL CONSTRUCTION ARE PRESENTED. FOR A COMPLETE LAYOUT OF UTILITIES REFER TO THE PLAN AND PROFILES MENTIONED IN NOTE 5.

5) TUNNEL AND UTILITY LOCATIONS AND OTHER PRESENTED INFORMATION WAS GATHERED FROM THE THORNTON WATER PROJECT SEGMENT A PHASE I 42" Ø RAW WATER PIPELINE 75% SUBMITTAL PLAN AND PROFILES SHEETS PP-01, PP-06, PP-10, PP-12, PP-15, PP-16, PP-23, PP-26, PP-31, AND PP-34 PROVIDED BY AECOM. UTILITY EXTENTS ARE LIMITED BY THIS INFORMATION.

SYMBOLS LEGEND:

- SOIL SURVEY MONITORING POINT ARRAY (S-X)
- SOIL SURVEY MONITORING POINT (SP-X)
- PAVEMENT / SIDEWALK SURVEY MONITORING POINT ARRAY (P-X)/(SW-X)
- UTILITY MONITORING POINTS (U-X)
- PROPOSED TUNNEL ALIGNMENT

RESPONSES TO GEOTECHNICAL COMMENTS FROM THE INTERIM 90% SUBMITTAL AND ANY REVISIONS BASED ON THE RJH GEOTECHNICAL REVIEW WILL BE INCORPORATED INTO THE FINAL SUBMITTAL

NOT FOR CONSTRUCTION - 95%

LITHOS ENGINEERING

TWP SEGMENT A,
PROJECT No. 12-777H5

CLIENT

CITY OF THORNTON
12450 WASHINGTON ST,
THORNTON, CO 80241
720.977.6700 tel 000.000.0000 fax
www.thorntonwaterproject.com

CONSULTANT

LITHOS ENGINEERING
2750 S WADSWORTH BLVD, SUITE D-200
DENVER, COLORADO 80227
T 303.625.9502
WWW.LITHOSENG.COM

ISSUE/REVISION

I/R	DATE	DESCRIPTION
B	09/25/2020	35% FINAL SUBMITTAL
A	04/21/2020	35% SUBMITTAL

VERIFIED SCALES

0 10 20
SCALE 1" = 10'

BAR IS ONE INCH ON ORIGINAL DRAWING
0 1"
IF NOT ONE INCH ON THIS SHEET, ADJUST SCALES ACCORDINGLY

DRAWN BY:	DF
CHKD BY:	DF
CHKD BY:	LH
APPD BY:	NS

PROJECT NUMBER

60619101

SHEET TITLE

INSTRUMENTATION AND MONITORING LOCATIONS BRANTNER GULCH CROSSING

SHEET NUMBER

IM08 OF 83

Z:\Shared\S-Drive\Projects\19049 Thornton RWL - Thornton Reach\Design\Dwgs\I&M Drawing.dwg

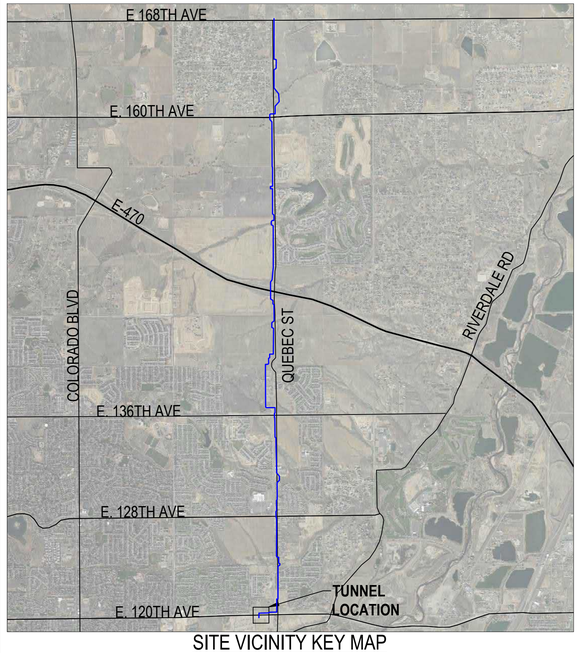

SITE VICINITY KEY MAP

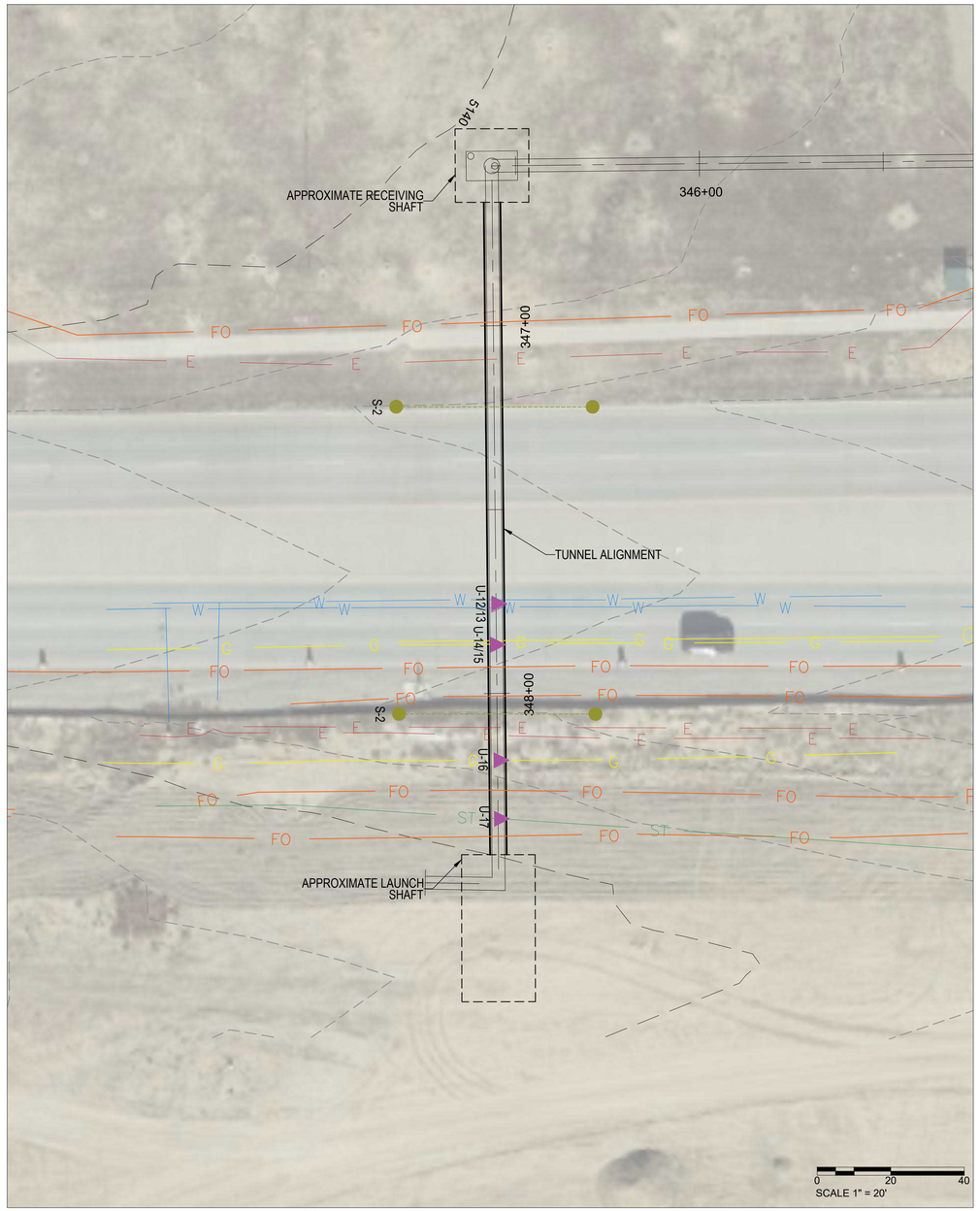

P1 -- INSTRUMENTATION AND MONITORING PLAN
E. 120TH AVE. CROSSING (STA. 346+66.44 TO 348+43.85)

N

GENERAL NOTES:

1) MONITORING ARRAY AND POINT DETAILS ARE PROVIDED ON SHEET IM06.

2) IN GENERAL, ALL MONITORING POINT ARRAYS AND SOIL SURVEY POINTS SHALL BE CENTERED AROUND THE CENTERLINE OF THE PROPOSED WATERLINE AND PERPENDICULAR TO THE TUNNEL ALIGNMENT WITH THE EXCEPTION OF THE SIDEWALK MONITORING ARRAY WHICH SHALL BE ORIENTED AS SHOWN ON SHEET IM05. MONITORING ARRAYS SHALL BE POSITIONED SUCH THAT TRAFFIC IS NOT IMPEDED.

3) UTILITY MONITORING POINTS WITHIN ROADWAYS SHALL HAVE ROAD PLATE COVERS AS SHOWN ON SHEET IM06 TO PREVENT DAMAGE FROM TRAFFIC. ALL UTILITY MONITORING POINTS NOT WITHIN ROADWAYS SHALL BE HOUSED BY A STICK UP COVER AS DETAILED ON SHEET IM06

4) ONLY UTILITIES PERTINENT TO TUNNEL CONSTRUCTION ARE PRESENTED. FOR A COMPLETE LAYOUT OF UTILITIES REFER TO THE PLAN AND PROFILES MENTIONED IN NOTE 5.

5) TUNNEL AND UTILITY LOCATIONS AND OTHER PRESENTED INFORMATION WAS GATHERED FROM THE THORNTON WATER PROJECT SEGMENT A PHASE I 42" Ø RAW WATER PIPELINE 75% SUBMITTAL PLAN AND PROFILES SHEETS PP-01, PP-06, PP-10, PP-12, PP-15, PP-16, PP-23, PP-26, PP-31, AND PP-34 PROVIDED BY AECOM. UTILITY EXTENTS ARE LIMITED BY THIS INFORMATION.

SYMBOLS LEGEND:

- SOIL SURVEY MONITORING POINT ARRAY (S-X)
- SOIL SURVEY MONITORING POINT (SP-X)
- PAVEMENT / SIDEWALK SURVEY MONITORING POINT ARRAY (P-X)/(SW-X)
- UTILITY MONITORING POINTS (U-X)
- PROPOSED TUNNEL ALIGNMENT

RESPONSES TO GEOTECHNICAL COMMENTS FROM THE INTERIM 90% SUBMITTAL AND ANY REVISIONS BASED ON THE RJH GEOTECHNICAL REVIEW WILL BE INCORPORATED INTO THE FINAL SUBMITTAL

NOT FOR CONSTRUCTION - 95%

LITHOS ENGINEERING

TWP SEGMENT A,
PROJECT No. 12-777H5

CLIENT

CITY OF THORNTON
12450 WASHINGTON ST,
THORNTON, CO 80241
720.977.6700 tel 000.000.0000 fax
www.thorntonwaterproject.com

CONSULTANT

LITHOS ENGINEERING
2750 S WADSWORTH BLVD, SUITE D-200
DENVER, COLORADO 80227
T 303.625.9502
WWW.LITHOSENG.COM

ISSUE/REVISION

I/R	DATE	DESCRIPTION
B	09/25/2020	35% FINAL SUBMITTAL
A	04/21/2020	35% SUBMITTAL

VERIFIED SCALES

0 20 40
SCALE 1" = 40'

BAR IS ONE INCH ON ORIGINAL DRAWING
0 1"
IF NOT ONE INCH ON THIS SHEET, ADJUST SCALES ACCORDINGLY

DRAWN BY:	DF
CHKD BY:	DF
CHKD BY:	LH
APPD BY:	NS

PROJECT NUMBER

60619101

SHEET TITLE

INSTRUMENTATION AND MONITORING LOCATIONS E 120TH AVE CROSSING

SHEET NUMBER

IM09 OF 83

Z:\Shared\S-Drive\Projects\19049 Thornton RWL - Thornton Reach\Design\Dwgs\I&M Drawing.dwg

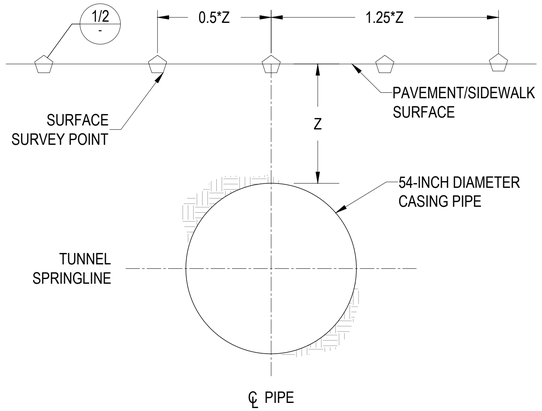

- / -- PAVEMENT/SIDEWALK MONITORING POINT ARRAY
SCALE: NTS

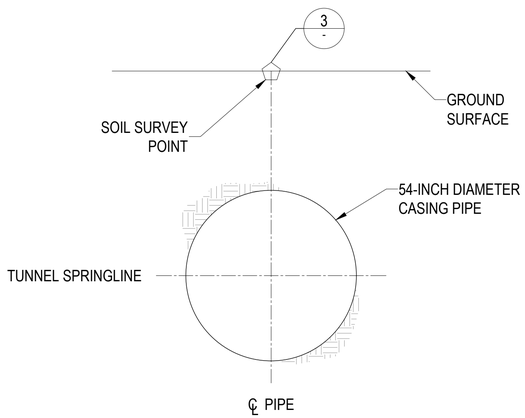

- / -- SOIL MONITORING POINT
SCALE: NTS

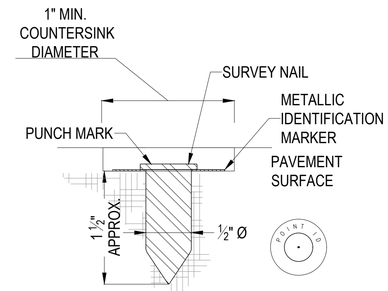

1 / -- PAVEMENT SURFACE SURVEY POINT
SCALE: NTS

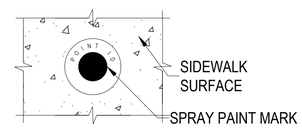

2 / -- SIDEWALK SURFACE SURVEY POINT
SCALE: NTS

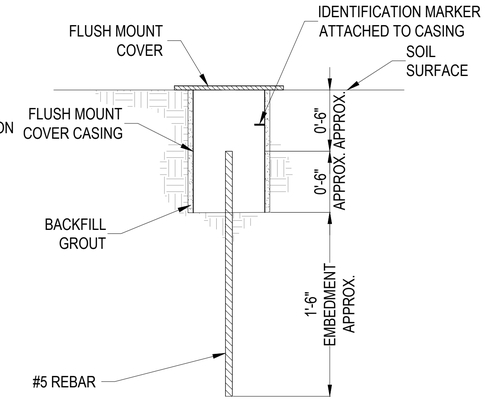

3 / -- SOIL SURFACE SURVEY POINT
SCALE: NTS

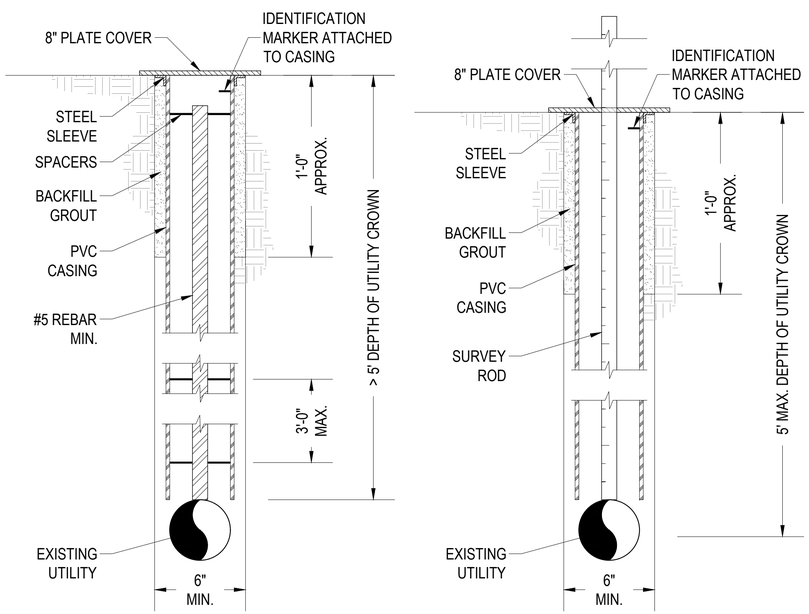

-- / -- UTILITY MONITORING POINT
SCALE: NTS

FOR DEEPER UTILITIES (> 5' CROWN DEPTH):

1. SPACERS AT 3'-0" MAX. VERTICAL OR 2 SPACERS MIN.
2. UTILITY LOCATION AND DEPTH SHALL BE VERIFIED BY THE CONTRACTOR.
3. CONTACT BETWEEN THE REBAR AND THE UTILITY SHALL BE VERIFIED PRIOR TO SURVEY.
4. PLACE MONITORING POINTS AT THE CENTERLINE OF THE CROSSING ALIGNMENT FOR ALL MONITORED UTILITIES.

FOR SHALLOWER UTILITIES (< 5' CROWN DEPTH):

1. SURVEY ROD MAY BE PLACED DIRECTLY IN CONTACT WITH UTILITY CROWN.
2. UTILITY LOCATION AND DEPTH SHALL BE VERIFIED BY THE CONTRACTOR.
3. PLACE MONITORING POINTS AT THE CENTERLINE OF THE CROSSING ALIGNMENT FOR ALL MONITORED UTILITIES.

NOTES:

1. SEE SECTION 31 09 13 - GEOTECHNICAL INSTRUMENTATION AND MONITORING FOR REQUIREMENTS.
2. SITE SAFETY INCLUDING SURVEY READINGS CONDUCTED IN ROADWAY RIGHT-OF-WAY SHALL BE AT THE CONTRACTOR'S DISCRETION. ANY TRAFFIC CONTROL SHALL BE PROVIDED BY THE CONTRACTOR AS NECESSARY TO CONDUCT SURVEY READINGS.
3. PAVEMENT MONITORING ARRAYS SHALL CONSIST OF FIVE SPACED SURFACE SURVEY POINTS. SIDEWALK MONITORING ARRAYS SHALL CONSIST OF THREE EVENLY SPACED SURFACE SURVEY POINTS.
4. MONITORING ARRAY, SOIL POINT, AND UTILITY MONITORING POINT LOCATIONS ARE SHOWN IN SHEETS IM01 THROUGH IM05.
5. SURFACE MONITORING POINTS SHALL BE SITUATED SUCH THAT ROADWAY TRAFFIC IS NOT IMPEDED AND SUCH THAT SURVEY READINGS ARE TAKEN AT A CONSISTENT LOCATION THROUGHOUT THE PROJECT.
6. MONITORING ARRAYS AND POINTS FOR EACH INDIVIDUAL TUNNEL ALIGNMENT SHALL BE SURVEYED:
   - 6.1. TWICE PRIOR TO TUNNEL CONSTRUCTION. SEE SPECIFICATIONS FOR MORE DETAILS
   - 6.2. ONCE DAILY DURING TUNNEL CONSTRUCTION.
   - 6.3. ONCE DAILY DURING CONTACT GROUTING.
   - 6.4. WEEKLY AFTER TUNNEL CONSTRUCTION UNTIL MOVEMENT STOPS, AS DETERMINED BY THE ENGINEER.
7. RESPONSE VALUES FOR COLLECTED SURVEY DATA ARE AS SHOWN IN THE TABLE BELOW:

INSTRUMENTATION RESPONSE VALUES		
INSTRUMENT	THRESHOLD VALUE	SHUTDOWN VALUE
PAVEMENT/SIDEWALK MONITORING POINTS	0.04 FEET IN Z (VERTICAL) 0.2 FEET IN EITHER X OR Y (HORIZONTAL)	0.08 FEET IN Z (VERTICAL) 0.4 FEET IN EITHER X OR Y (HORIZONTAL)
SOIL MONITORING POINTS	0.08 FEET IN Z (VERTICAL) 0.2 FEET IN EITHER X OR Y (HORIZONTAL)	0.12 FEET IN Z (VERTICAL) 0.4 FEET IN EITHER X OR Y (HORIZONTAL)
UTILITY MONITORING POINTS	0.04 FEET IN Z (VERTICAL)	0.08 FEET IN Z (VERTICAL)

RESPONSES TO GEOTECHNICAL COMMENTS FROM THE INTERIM 90% SUBMITTAL AND ANY REVISIONS BASED ON THE RJH GEOTECHNICAL REVIEW WILL BE INCORPORATED INTO THE FINAL SUBMITTAL

NOT FOR CONSTRUCTION - 95%

LITHOS ENGINEERING

TWP SEGMENT A, PROJECT No. 12-777H5

CLIENT

CITY OF THORNTON
12450 WASHINGTON ST,
THORNTON, CO 80241
720.977.6700 tel 000.000.0000 fax
www.thorntonwaterproject.com

CONSULTANT

LITHOS ENGINEERING
2750 S WADSWORTH BLVD, SUITE D-200
DENVER, COLORADO 80227
T 303.625.9502
WWW.LITHOSENG.COM

ISSUE/REVISION

I/R	DATE	DESCRIPTION
B	09/25/2020	35% FINAL SUBMITTAL
A	04/21/2020	35% SUBMITTAL

VERIFIED SCALES

0 10 20
SCALE 1" = 10'

BAR IS ONE INCH ON ORIGINAL DRAWING
0 1"
IF NOT ONE INCH ON THIS SHEET, ADJUST SCALES ACCORDINGLY

DRAWN BY:	DF
CHKD BY:	DF
CHKD BY:	LH
APPD BY:	NS

PROJECT NUMBER

60619101

SHEET TITLE

INSTRUMENTATION AND MONITORING DETAILS

SHEET NUMBER

IM10 OF 83

Z:\Shared\S-Drive\Projects\19049 Thornton RWL - Thornton Reach\Design\Dwgs\I&M Drawing.dwg

MONITORING POINT SCHEDULE

CROSSING	STATION (APPROX)	ID	SHEET NUMBER	MONITORING POINT TYPE
E 168TH AVE.	2+70	P-1	IM01	PAVEMENT ARRAY
	2+95	P-2		PAVEMENT ARRAY
E 160TH AVE	59+36	U-1	IM02	UTILITY MONITORING POINT
	59+44	U-2		UTILITY MONITORING POINT
	59+56	P-3		PAVEMENT ARRAY
	60+20	P-4		PAVEMENT ARRAY
	60+81	U-3		UTILITY MONITORING POINT
	60+88	U-4		UTILITY MONITORING POINT
	61+09	U-5		UTILITY MONITORING POINT
	61+15	U-6		UTILITY MONITORING POINT
SMITH RESERVOIR FLOOD PLAIN	98+23	SP-1	IM03	SOIL MONITORING POINT
	98+94	SP-2		SOIL MONITORING POINT
TODD CREEK	119+47	U-7	IM04	UTILITY MONITORING POINT
	119+61	SP-3		SOIL MONITORING POINT
	120+45	SP-4		SOIL MONITORING POINT
E-470	151+88	U-8	IM05	UTILITY MONITORING POINT
	152+91	P-5		PAVEMENT ARRAY
	154+51	SP-5		SOIL MONITORING POINT
	155+30	P-6		PAVEMENT ARRAY
	155+67	P-7		PAVEMENT ARRAY
	156+13	P-8		PAVEMENT ARRAY
	156+48	P-9		PAVEMENT ARRAY
	157+48	SP-6		SOIL MONITORING POINT
	159+55	P-10		PAVEMENT ARRAY
	160+77	U-9		UTILITY MONITORING POINT
	160+77	U-10		UTILITY MONITORING POINT
E 136TH AVE.	229+73	P-11	IM06	PAVEMENT ARRAY
	230+06	U-11		UTILITY MONITORING POINT
	230+61	P-12		PAVEMENT ARRAY
HORIZON DITCH	264+32	SP-7	IM07	SOIL MONITORING POINT
	264+64	SP-8		SOIL MONITORING POINT
	264+97	SW-1		SIDEWALK MONITORING ARRAY
BRANTNER GULCH	311+55	SP-9	IM08	SOIL MONITORING POINT
	311+82	SP-10		SOIL MONITORING POINT
E 120TH AVE	347+22	S-1	IM09	SOIL MONITORING ARRAY
	347+75	U-12		UTILITY MONITORING POINT
	347+77	U-13		UTILITY MONITORING POINT
	347+86	U-14		UTILITY MONITORING POINT
	347+87	U-15		UTILITY MONITORING POINT
	348+06	S-2		SOIL MONITORING ARRAY
	348+18	U-16		UTILITY MONITORING POINT
	348+34	U-17		UTILITY MONITORING POINT

RESPONSES TO GEOTECHNICAL COMMENTS FROM THE INTERIM 90% SUBMITTAL AND ANY REVISIONS BASED ON THE RJH GEOTECHNICAL REVIEW WILL BE INCORPORATED INTO THE FINAL SUBMITTAL

NOT FOR CONSTRUCTION - 95%

Z:\Shared\S-Drive\Projects\19049 Thornton RWL - Thornton Reach\Design\Dwga\I&M Drawing.dwg

LITHOS ENGINEERING

TWP SEGMENT A,
PROJECT No. 12-777H5

CLIENT

CITY OF THORNTON
12450 WASHINGTON ST,
THORNTON, CO 80241
720.977.6700 tel 000.000.0000 fax
www.thorntonwaterproject.com

CONSULTANT

LITHOS ENGINEERING
2750 S WADSWORTH BLVD, SUITE D-200
DENVER, COLORADO 80227
T 303.625.9502
WWW.LITHOSENG.COM

ISSUE/REVISION

I/R	DATE	DESCRIPTION
B	09/25/2020	35% FINAL SUBMITTAL
A	04/21/2020	35% SUBMITTAL

VERIFIED SCALES

0 10 20
SCALE 1" = 10'

BAR IS ONE INCH ON ORIGINAL DRAWING
0 1"
IF NOT ONE INCH ON THIS SHEET, ADJUST SCALES ACCORDINGLY

DRAWN BY:	DF
CHKD BY:	DF
CHKD BY:	LH
APPD BY:	NS

PROJECT NUMBER

60619101

SHEET TITLE

INSTRUMENTATION AND MONITORING SCHEDULE

SHEET NUMBER

IM11 OF 83